INSTRUCTION MANUAL

Electronic Galvanometer
Type GVM30

From serial No. 167 451

RADIOMETER

ELECTRONIC MEASURING INSTRUMENTS
FOR SCIENTIFIC AND INDUSTRIAL USE

Instruction Manual
for

Electronic Galvanometer
Type GVM30

From serial No. 167 451

3rd edition

Table of Contents

Electronic Galvanometer Type GVM30

Section A. Introduction

Fig.A1. The Electronic Galvanometer, type GVM30.

The Electronic Galvanometer, type GVM30, is a portable, line- or battery-operated precision measuring instrument. It is based on a solid-state amplifier which is designed in accordance with the latest dc amplifier technique. Consequently, the Electronic Galvanometer can also be highly recommended as a handy laboratory instrument for dc work.

It measures from 30 pA to 300 μA f.s. with ±3% accuracy and with a voltage drop of only 100 μV, and from 1 mV to 300 V f.s., also with ±3% accuracy, at an input resistance of 10^{11} Ω or > 100 MΩ according to the range. A polarity switch provides for passing positive or negative currents or potentials. The input may be floated up to ±400 V with respect to chassis. Finally, the Electronic Galvanometer measures resistances from 1 kΩ to 300 MΩ f.s. within ±5%.

The Electronic Galvanometer, type GVM30, is provided with a recorder output, a very useful feature when monitoring, for example, environmental and reliability tests or other long-term measurements.

Section B. Specifications

CURRENT RANGE

Picoamps (f.s.d.):	30, 100, and 300
Nanoamps (f.s.d.):	1, 3, 10, 30, 100, and 300
Microamps (f.s.d.):	1, 3, 10, 30, 100, and 300
Accuracy:	±3%
Input voltage drop (f.s.d.):	about 100 μV
Terminal current:	<1 pA (0-50°C)
Max. input voltage:	50 V in all current ranges.
	Note: By using an external shunt of 1 Ω and the mV-range, it is possible to increase the measuring range up to, for example, 1 A according to the power rating of the shunt. The reading is then mA instead of mV.

VOLTAGE RANGE

Millivolts (f.s.d.):	1, 3, 10, 30, 100, and 300
Volts (f.s.d.):	1, 3, 10, 30, 100, and 300
Accuracy:	±3%
Input resistance:	> 10^{11} Ω (1 mV - 1 V) > 100 MΩ (3 V - 300 V)
Zero drift:	< 50 μV/°C
Terminal current:	< 1 pA (0-50°C)
Noise:	±25 μV max.
Max. input voltage:	500 V (in all ranges)

RESISTANCE RANGE

Kilohms (f.s.d.):	1, 3, 10, 30, 100, and 300
Megohms (f.s.d.):	1, 3, 10, 30, 100, and 300
Accuracy:	±5%
Test voltage:	max. 0.3 V
Max. voltage between LOW and HIGH terminal:	50 V in all resistance ranges.

RESPONSE TIME FOR 99% DEFLECTION	
30, 100, and 300 pA:	approx. 15 s
1 mV:	approx. 5 s
Other ranges:	approx. 2 s
RECORDER OUTPUT	
1 mV:	0.1 V, 100 kΩ
3 mV:	0.3 V, 100 kΩ
10 mV - 300 V:	1 V, 100 kΩ
30 pA - 300 μA:	1 V, 100 kΩ
1 kΩ - 300 MΩ:	0.3 V, 100 kΩ
INSULATION	Circuit ground to chassis ground greater than 10^7 Ω shunted by 0.1 μF. Circuit ground may be floated up to ±400 V with respect to chassis ground.
DIMENSIONS AND WEIGHT	
Height:	150 mm (6")
Width:	120 mm (4 3/4")
Depth:	230 mm (9 1/4")
Weight:	2.4 kilos (5 lbs.)
POWER SUPPLY	6 x 1.5 V batteries, type C
ACCESSORIES AVAILABLE:	Coaxial Cable (75 Ω), code 617-002, with UHF Plugs, type PL259.
	2 MΩ Test Probe, type PB3
	Test Lead with banana plug, type L301/1 m
	1.5 V battery, code 430-101
	Power Supply Unit, 115 V/50-60 Hz, type AO111
	Power Supply Unit, for 110-220 V/50 H, type AO112
	Power Supply Unit for 6 x 1.5 V batteries (supplied without batteries), type AO113.
	Note: For details regarding the mounting of the three types of power supply, see SECTION D - OPERATING INSTRUCTIONS.

Section C. General Description

The input terminals of the Electronic Galvanometer, type GVM30, are the two UHF connectors LOW and HIGH. The shield of these connectors and the banana jack marked ⏚ are at chassis potential, whilst the inner lead of the LOW and HIGH terminals are used for feeding the signal, or coupling the unknown resistance to the instrument. The LOW and HIGH terminals are coupled to an operational amplifier circuitry featuring the extremely low input voltage drop and the high input resistance necessary for current and voltage measurements, respectively. The amplifier, in conjunction with a feedback network controlled by a function selector, constitutes the core of the instrument. The mode of coupling the feedback network to the amplifier determines the type of measurement which can be performed. The amplifier is followed by a meter circuit and a recorder output that delivers a signal proportional to the meter reading.

The operating principle of the Electronic Galvanometer in the three measuring modes, viz: voltage, current and resistance measurements, is as follows:

Voltage

The mode of coupling the feedback network to the amplifier for voltage measurements in the range 100 mV to 1 V is illustrated in Fig.C1. The terminal LOW is connected to circuit ground, and the terminal HIGH to the input of the amplifier. The feedback network consists of precision resistors forming a three-step voltage divider which is coupled via the RANGE selector to an array of series resistors. (For the sake of simplicity, the array is shown as one resistor R in Fig.C1.)

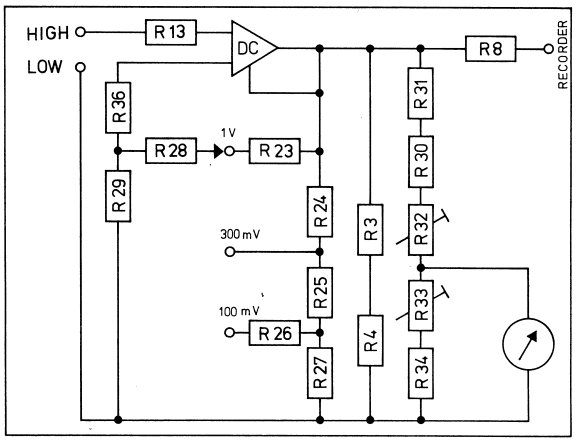

Fig.C1. Block-diagram illustrating voltage measurements in the range 100 mV to 1 V.

Extension of voltage measurements up to 300 V is performed when the feedback network has the configuration illustrated in Fig.C2. Here the terminal LOW is still connected to circuit ground, but the terminal HIGH is connected to the input of the amplifier via an input attenuator. Only two steps of the three-step voltage divider are used.

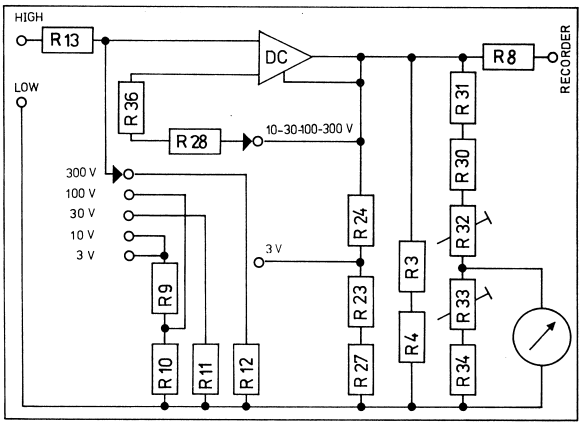

Fig. C2. Block-diagram illustrating voltage measurements in the range 3 V to 300 V.

Extension of voltage measurement down to 1 mV is performed when the feedback network has the configuration illustrated in Fig. C3. The terminals LOW and HIGH are connected as for voltage measurements in the range 100 mV to 1 V. Again, only two steps of the voltage divider are used, but here an additional resistor (R_A) is added. This additional resistor ensures reduction of the feedback. Furthermore, in the 1 and 3 mV ranges, the series resistor of the meter is stepwise reduced. This accounts for the different recorder output voltages, viz:

1 mV range: 0.1 V
3 mV range: 0.3 V

instead of 1 V as in the ranges 10 mV to 300 V.

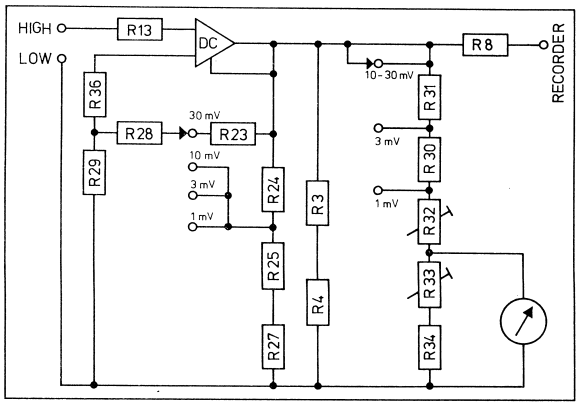

Fig. C3. Block-diagram illustrating voltage measurements in the range 1 to 30 mV.

Current

The mode of coupling the feedback network to the amplifier for current measurements in the whole range from 30 pA to 300 μA is illustrated in Fig. C4. The terminal LOW is connected to circuit ground, and the terminal HIGH to the input of the amplifier. The feedback network consists of precision resistors forming a three-step voltage divider which via the RANGE selector is coupled to one of the resistors in an array of series resistors.

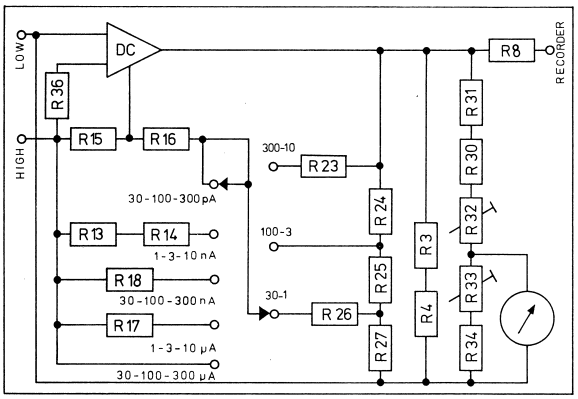

Fig. C4. Block-diagram illustrating current measurements.

Resistance

The mode of coupling the feedback network to the amplifier for resistance measurements in the whole range from 1 kΩ to 300 MΩ is illustrated in Fig. C5. The unknown resistor R_X is connected in the feedback loop between the LOW and HIGH terminals. The zener diode alongside with two voltage dividers and the series resistors forms a current generator which delivers a constant current in each range. This current is fed to the unknown resistor. The voltage drop across the unknown resistor determines the meter reading.

The input current to the amplifier is kept within certain limits when the RANGE selector is set to the correct value depending on the magnitude of the unknown resistor.

CONTROLS, TERMINALS, AND METER

General

As illustrated in Figs. C6 and C7, the

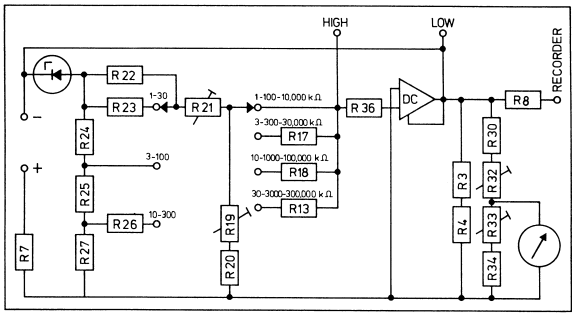

Fig. C5. Block-diagram illustrating resistance measurements:

Electronic Galvanometer, type GVM30, is provided with the following controls, terminals and meter:

Operational Switch (1)

The operational switch consists of four push-buttons:

The button ON-OFF is used to switch the instrument on (engaged) or off (disengaged). Whenever the instrument is not in use, the ON-OFF button should be disengaged, i.e., in position OFF.

The button BATT. CHECK is used, when engaged, to check the batteries when a Power Supply Unit, type AO1T3, is utilized.

The button SET ZERO/MEASURE is used, when engaged, alongside with the ZERO knob (see below) when zero balancing

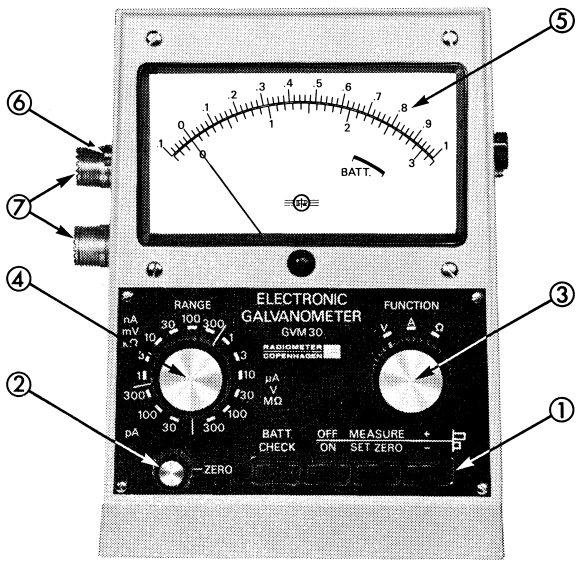

Fig. C6. The Electronic Galvanometer, type GVM30.

is required. When the SET ZERO/MEASURE button is disengaged, i.e., in position MEASURE, the instrument is ready to measure.

The button +,- is used to change the polarity of the terminals. The terminal HIGH is positive with respect to the terminal LOW when the button +,- is disengaged, and negative with respect to LOW when the button is engaged.

ZERO Knob (2)

The knob ZERO controls a variable capacitor used to set the zero balance. Zero balance can be checked on the meter when the SET ZERO/MEASURE button is engaged.

FUNCTION Selector (3)

The selector FUNCTION is a three-position rotary switch enabling selection of the type of measurement to be performed, viz., voltage measurement in position V, current measurement in position A, and resistance measurement in position Ω.

RANGE Selector (4)

The selector RANGE is a fifteen-position rotary switch providing for selection of the desired full-scale deflection range.

Meter (5)

The meter of the Electronic Galvanometer is of the taut-band suspension type, and it is provided with two scales calibrated from -0.1 to 1 and -0.03 to 0.3. Furthermore, a mark BATT. permits checking of the batteries' voltage which should fall within the mark.

Ground Terminal (6)

The terminal marked ⏚ is a banana jack at the same potential as chassis ground, and it is used to ground the instrument.

LOW and HIGH Terminals (7)

The terminals LOW and HIGH are two UHF sockets whose outer conductors are at the same potential as chassis ground, and whose inner conductors are used to feed the signal to the instrument.

RECORDER Terminals (See Fig. C7)

The terminals RECORDER are banana jacks used for connection to a recorder. The bottom jack is a grounding terminal.

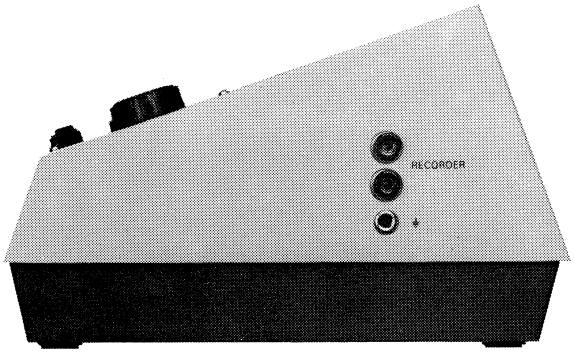

Fig. C7. Side view of the Galvanometer, type GVM30, showing the recorder terminals.

Section D. Operating Instructions

CHANGING FROM BATTERY OPERATION TO LINE OPERATION AND VICE VERSA

Three Power Supply Units are available, viz: type AO111 for 110V/50-60 Hz operation, type AO112 for 110/220V/ 50-60 Hz operation, and type AO113 for operation with six 1.5 V batteries. These three types of Power Supply Units are each embodied in a cast aluminium housing used at the same time as the bottom of the instrument and fastened by two screws. Exchanging Power Supply Units is readily performed by removing the two bottom screws and detaching the red, three-pole plug that ensures electrical connection between the two parts of the instrument, then connecting the new type of Power Supply Unit and refastening the two screws.

CHANGING THE BATTERIES OF THE POWER SUPPLY UNIT, TYPE AO113

1) Remove the two screws fastening the Power Supply Unit, type AO113, to the upper part of the Electronic Galvanometer, and separate the two parts.

2) Lift out the battery racks and replace the batteries by new ones. Correct positioning of the batteries is shown in the diagram inside the Power Supply Unit, type AO113. (See also Fig.D2.)

3) Push in the buttons ON and BATT. CHECK. Check that the voltage indicated on the meter is within the BATT. mark; if not, the new batteries may have been wrongly positioned or else they are out of order.

STEP-BY-STEP OPERATION

1) Push in the ON-OFF button.

2) Push in the BATT. CHECK button and check that the meter pointer deflects to the mark BATT.; otherwise the batteries must be inspected and replaced if, necessary.

3) Push in the SET ZERO button and bring the meter pointer to zero by means of the ZERO control.

4) By means of the FUNCTION selector, switch the instrument to the type of measurement required.

5) Connect the object under test to the Electronic Galvanometer. This is done by using the LOW and HIGH connectors on the left side of the instrument. If the connector HIGH is the positive pole, the button +,- must be out. If the connector LOW is the positive pole, the button +,- must be pushed in. Note that when measuring on resistances, the polarity of the terminals is reversed.

6) Push in the button SET ZERO so that the instrument is switched to MEASURE.

7) Rotate the RANGE selector until an appropriate meter deflection is obtained.

8) If necessary, reverse the polarity of the HIGH terminal by using the button +,-.

USE AS DIFFERENTIAL VOLTMETER

1) Proceed from step 1 to step 4, as above.

2) Connect the two voltages whose difference is to be measured, as shown in Fig.D3.

3) Proceed as indicated in steps 6 to 8 above.

Note: Bear in mind that the maximum voltage which must be applied between the circuit ground and the chassis ground is ±400 V.

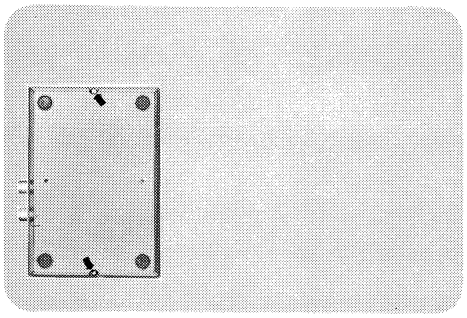

Remove the two screws on the bottom of the instrument.

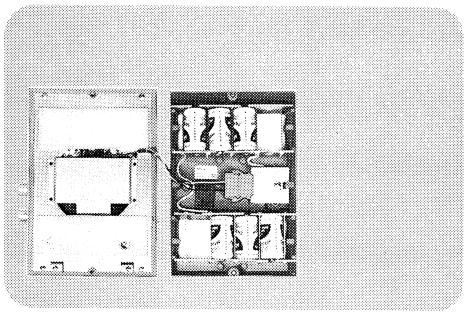

Separate the two parts.

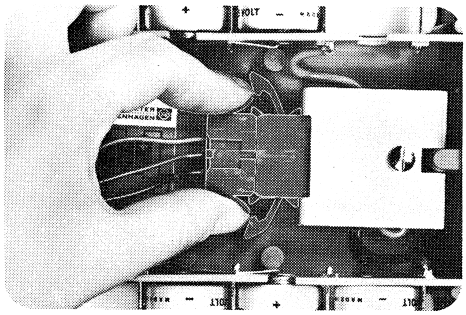

With two fingers, spread the clamps and hold them back.

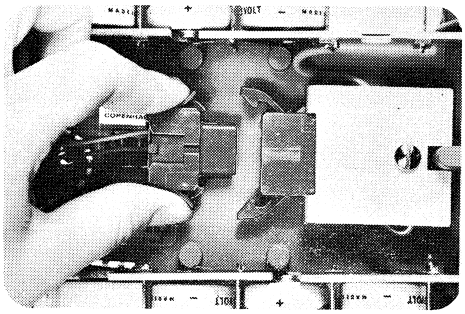

Pull out the red plug.

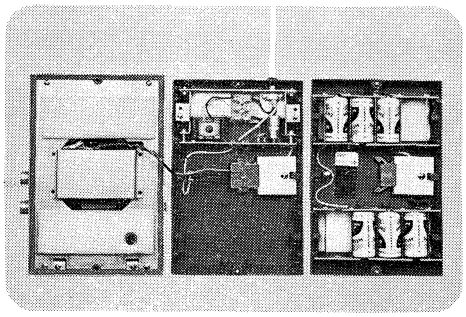

The plug is now easily inserted in the receptacle of the other Power Supply Unit type.

Fig. D1. How to exchange Power Supply Units.

Fig. D2. Interior of Power Supply, type AO113, showing battery positions and socket of connector from Power Supply Unit to Electronic Galvanometer.

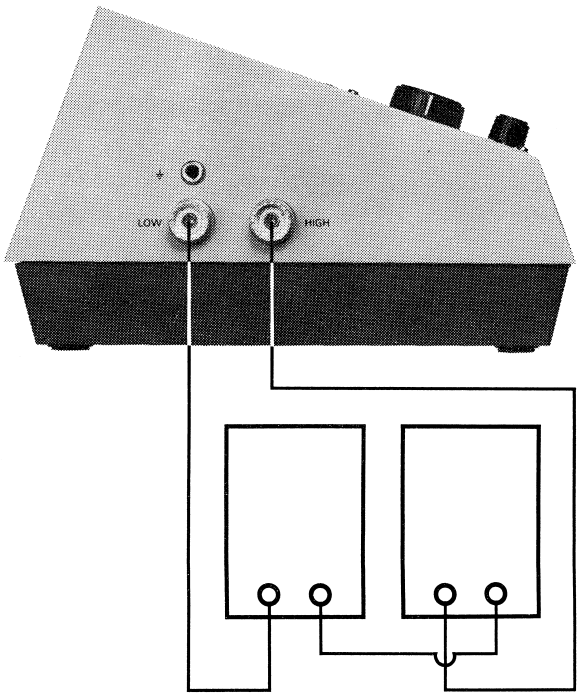

Fig. D3. How to connect the Electronic Galvanometer, type GVM30, when performing differential measurements.

Section E. DC Amplifier, Code 900-008

DESCRIPTION (see diagram No.1769-A2)

The input voltage signal is applied to the non-inverting input terminal J1, and then passed, via the high-value resistors, R1 and R2, to the tuned circuit assembly of the oscillator circuit. The signal is applied across the centre points of the tuned circuit so that the variable capacitance diodes CR1 and CR2 are biased in opposite, but equal proportions. This arrangement results in the oscillator frequency remaining unchanged, but the impedance to the oscillator feedback passed across T1 will vary. The amplitude of the oscillator output will then change in proportion to the magnitude of the input signal. The oscillator circuit consists of the transistors Q1 and Q2. The transistor Q3 is directly coupled to Q2 to offset the base/collector capacitance of Q2, and to provide for impedance-matching for connection of the feedback and the oscillator output. Q3 is dc-coupled to an FET, Q4, which has unity gain and which achieves further impedance-matching to the subsequent circuitry. Q4 is source-follower coupled to a two-stage current amplifier which consists of the complementary pair Q5 and Q6. The output of the current amplifier is connected to a detector bridge which rectifies the oscillator output. Feedback from the detector bridge is passed to the emitter circuit of Q5 across R15. The output from the detector is passed to the dc output amplifier consisting of Q9. The dc output amplifier is also connected as an integrator (C21) which removes any residual ac components in the dc output signal.

To establish the zero point, a trimmer capacitor C5 is provided. With the input terminal shorted to the 0 V and the output terminal connected to the inverting input terminal J2, the trimmer is adjusted for a zero output voltage. The dc Amplifier, code 900-008, is arranged to operate from a +9 V dc supply.

Section F. Maintenance

DC AMPLIFIER, CODE 900-008
(see diagram No.1769-A2 and Fig.G2.)

General

The dc Amplifier may be considered defective if:

1) the zero point cannot be adjusted with the trimmer C5

2) dc amplification is incorrect (i.e., if a change of the input signal does not cause a corresponding change on the meter)

3) the meter reading is erratic (noisy).

The following tests will help to trace a fault in the dc Amplifier so that a repair can be effected. However, if it is found that the tests do not lead to the clearing of a fault, then it is recommended that the dc Amplifier be replaced.

Oscillator

1) Disconnect the green and red plugs from J1 and J2, respectively, and remove the top cover plate of the dc Amplifier.

2) Connect a short-circuit between J1, J2 and J3/4.

3) Connect an oscilloscope between J4 and J3/4.

4) Set the trimmer C5 to maximum capacitance.

5) Check that the oscillator output shown by the oscilloscope corresponds to approximately 100 kHz and 120 mV.

6) Set the trimmer C5 to minimum capacitance.

7) Check that the oscillator no longer oscillates.

8) If items 5 and 7 cannot be carried out, the capacitance diodes CR1 and CR2 may be defective. CR1 and CR2 are a matched pair and both must be replaced by a new matched pair from Radiometer.

Amplifying Circuits

9) Remove the short-circuit from J1, J2 and J3/4.

10) Reconnect the green and red plugs to J1 and J2.

11) Set the RANGE selector in position 1 (mV).

12) Set the FUNCTION selector in position V.

13) Depress the buttons MEASURE/SET ZERO and ON/OFF.

14) By means of the zero control, adjust the meter to zero.

15) Check by means of an oscilloscope that the signal present at J4 is approximately 6 mV. If the peak-to-peak value of the signal substantially deviates from 6 mV, the dc Amplifier is probably defective.

16) Connect a short-circuit between the base of transistor Q1 and J3/4.

17) Check the voltages present at the transistors according to the table below.

18) When the defect is localized and remedied, remove the short-circuit.

19) By means of the trimmer C5, adjust the instrument to zero.

20) Connect a dc Voltmeter between J3/7 and J3/4, and check that the voltage measured is 0 mV.

21) Disengage the button MEASURE/SET ZERO and feed a 1 mV signal to the Electronic Galvanometer.

22) Check that the voltage between J3/7 and J3/4 is 1 mV.

23) Reverse the input connection to the Electronic Galvanometer and check that the voltage between J3/7 and J3/4 has reversed polarity.

24) Connect an oscilloscope between J3/7 and J3/4 and make sure that the noise voltage is less than 5 mV peak-to-peak.

Q1 emitter	-0.65 V dc
Q1 base	0 V dc
Q1 collector	4 V dc
Q2 emitter	4.7 V dc
Q2 base	4 V dc
Q2 collector	0.6 V dc
Q3 emitter	0.6 V dc
Q3 base	0 V dc
Q3 collector	-0.64 V dc 2 mV ac
Q4 source	0.03 V dc
Q4 gate	-0.64 V dc
Q4 drain	6 V dc
Q5 emitter	0 V dc
Q5 base	0.01 V dc
Q5 collector	4.2 V dc 12.5 mV ac
Q6 emitter	4.9 V dc
Q6 base	4.2 V dc
Q6 collector	0.6 V dc 0.6 V ac
Q9 emitter	-2.4 V dc
Q9 base	-1.8 V dc
Q9 collector	0 V dc

Typical voltage for the dc Amplifier, code 900-008, with GVM30 in position 1 V and with short-circuited input terminals or the base of Q1 short-circuited to J3/4.

Section G. Parts List

In the following parts list a group code prefix number is used. To facilitate the use of this code, the different types of parts and their corresponding group code prefixes are listed below:

Standard resistors	100- to 139-
Precision resistors	140- to 152-
Non-linear resistors	160-
UHF resistors	170- to 172-
Carbon potentiometers	180- to 185-
Wire-wound potentiometers	190- to 195-
Mica capacitors	200- to 208-
Ceramic capacitors	210- to 214-
Paper capacitors	220- to 222-
Metal-paper capacitors	224- to 229-
Plastic capacitors	240- to 245-
Electrolytic capacitors	260- to 267-
Variable capacitors	280- to 286-
Special tubes	310-
Rectifiers	340- to 341
Diodes	350-
Transistors	360-
Integrated circuits	364-
Lamps, batteries, fuses	400- to 486-
Switches	500- to 580-
Coils, coil material and transformers	700- to 785-

As we are continually improving our instruments, it is important, when ordering spare parts, that you include the following information:

The code number and description of the part.
The circuit reference from the wiring diagram.
The complete type designation of your instrument.
The serial number of your instrument.

Please note that the position of any part can easily be found by refering to the list column of the parts list. This indicates on which figure the part can be located.

MAIN PARTS LIST

CAPACITORS

Designation	Type	Value	Code No.
C1	polyester	0.1 µF 10% 400 V	240-610
C2	ceramic	10 nF -20 +80% 12 V	213-020
C3	variable	100 pF "ZERO"	280-020

DIODES

Designation	Type	Code No.
CR1	zener diode BZY88/C6V2	350-604

BUSHINGS

Designation	Type	Code No.	Code No.
J1	coaxial bushing UHF		800-009
J2	coaxial bushing UHF		800-009
J3	phone jack		803-241
J4	phone jack		803-241
J5	phone jack, red		803-206
J6	phone jack, black		803-205

METER

Designation	Type	Code No.
xM1	meter, 100 µA, with scale	482-143

PLUGS

Designation	Type	Code No.
P1	plug, red	805-705
P2	plug, green	805-704

Designation	Type	Code No.
P3	plug, 7-pole	805-618
P4	plug, 3-pole consisting of	
	1 red plug and	805-431
	3 contacts	805-434

RESISTORS

Designation	Type	Value	Code No.	Shown in Fig.
R1	carbon film	10 MΩ 5% 0.5 W	100-810	
R2	carbon film	10 MΩ 5% 0.5 W	100-810	G1
R3	carbon film	100 kΩ 5% 0.2 W	106-610	G1
R4	carbon film	1 kΩ 5% 0.2 W	106-410	G1
R6	carbon film	12 kΩ 5% 0.2 W	106-512	
R7	carbon film	4.7 kΩ 5% 0.2 W	106-447	
R8	carbon film	100 kΩ 5% 0.2 W	106-610	G1
R9	carbon film	10.1 MΩ 1% 1 W	143-010	G1
R10	carbon film	1.01 MΩ 1% 0.25 W	143-033	G1
R11	carbon film	3.26 MΩ 1% 0.25 W	145-035	G1
R12	carbon film	318 kΩ 1% 0.25 W	143-032	G1
R13	metal film	100 MΩ 1%	145-001	G1
R14	carbon film	3.3 MΩ 5% 0.5 W	100-733	
R15	high ohmic	3.16 GΩ 1%	145-000	G1
R16	carbon film	1 MΩ 5% 0.2 W	106-710	G1
R17	carbon film	97 kΩ 1% 0.25 W	143-031	
R18	carbon film	3.16 MΩ 1% 0.25 W	143-034	
R19	carbon pot.	5 kΩ 0.1 W	182-002	G1
R20	carbon film	1.8 kΩ 5% 0.2 W	106-418	G1
R21	carbon pot.	10 kΩ 0.1 W	182-008	G1
R22	carbon film	82 kΩ 5% 0.2 W	106-582	
R23	metal film	3.16 kΩ 1% 0.25 W	140-487	G1
R24	metal film	10 kΩ 0.5 % 0.125 W	140-450	G1
R25	metal film	3.16 kΩ 0.5% 0.125 W	140-448	G1
R26	metal film	1.84 kΩ 1% 0.125 W	140-446	G1

Designation	Type	Value	Code No.	Shown in Fig.
R27	metal film	1.463 kΩ 0.5% 0.125 W	140-445	G1
R28	metal film	27 kΩ 0.5% 0.125 W	140-451	G1
R29	metal film	1 kΩ 0.5% 0.125 W	140-444	G1
R30	metal film	2.16 kΩ 0.5% 0.125 W	140-447	G1
R31	metal film	6.84 kΩ 0.5% 0.125 W	140-449	G1
R32	carbon pot.	1 kΩ 0.1 W	182-001	G1
R33	carbon pot.	20 kΩ 0.1 W	182-007	G1
R34	carbon film	1.8 kΩ 5% 0.25 W	106-418	G1
R35	metal film	121 kΩ 1% 0.125 W	140-522	
R36	carbon film	8.2 MΩ 5% 0.2 W	109-017	
R37	carbon film	100 MΩ 5% 0.5 W	143-014	

SWITCHES

Designation	Type	Code No.	Shown in Fig.
xS1	switch "RANGE"	551-002	G1
xS2	switch "FUNCTION"	551-003	G1
xS3	switch "ON-OFF"	551-001	

CABLES

Designation	Type	Code No.
W1	teflon lead, RG196/U, 0.35 m	600-014
W2	teflon lead, RG196/U, 0.1 m	600-014
W3	teflon lead, RG196/U, 0.25 m	600-014
W4	teflon lead, RG196/U, 0.15 m	600-014
W5	teflon lead, RG196/U, 0.15 m	600-014
W6	teflon lead, RG196/U, 0.2 m	600-014
W7	teflon lead, RG196/U, 0.2 m	600-014

[x]Special part manufactured by Radiometer

MISCELLANEOUS

Designation	Type	Code No.
x	gasket for meter M1	486-205
x	knob, 14 ϕ	852-405
x	knob with mark	852-408
x	plug button, 6.5 ϕ	856-011
x	front plate	973-167

DC AMPLIFIER, CODE 900-008

CAPACITORS

Designation	Type	Value	Code No.	Shown in Fig.
C1	polystyrene	1 nF 5% 630 V	243-009	G2
C2	polystyrene	100 pF 5% 160 V	243-037	G2
C3	polystyrene	2 nF 5% 160 V	243-028	G2
C4	polystyrene	10 pF, matched, 630 V	243-081	G2
C5	trimmer	2-15 pF	285-514	G2
C6	polystyrene	1 nF 2% 63 V	243-014	G2
C7	polystyrene	1 nF 2% 63 V	243-014	G2
C8	polystyrene	700 pF 5% 160 V	243-033	G2
C9	polystyrene	1 nF 2% 63 V	243-014	G2
C10	ceramic	0.1 μF 12 V	213-017	G2
C11	ceramic	0.1 μF 12 V	213-017	G2
C12	ceramic	330 pF	213-021	G2
C13	polystyrene	150 pF 5% 160 V	243-030	G2
C14	ceramic	0.1 μF 12 V	213-017	G2
C15	ceramic	220 pF 20% 25 V	213-015	G2
C16	polyester	1 μF 10% 63 V	241-027	G2
C17	ceramic	0.1 μF 12 V	213-017	G2
C18	ceramic	10 nF 30 V	213-020	G2
C19	ceramic	10 nF 30 V	213-020	G2
C20	ceramic	10 nF 30 V	213-020	G2
C21	tantalum	15 μF 30 V	267-008	G2
C22	ceramic	0.1 μF 12 V	213-017	G2
C23	tantalum	5 μF 25 V	267-004	G2
C24	tantalum	5 μF 25 V	267-004	G2

DIODES

Designation	Type	Code No.	Shown in Fig.
xCR1	capacitance diode BAY35, matched	350-026	G2
xCR2	capacitance diode BAY35, matched	350-026	G2
CR3	capacitance diode BAY35	350-026	G2
CR4	diode BAX16	350-023	G2
CR5	diode BAX16	350-023	G2
CR6	zener diode 1N746A	350-616	G2

TERMINALS

Designation	Type	Code No.	Shown in Fig.
J1	bushing, white	805-708	G2
J2	bushing, white	805-708	G2
J3	terminal strip, 7-pole	805-615	G2
J4	contact lug	805-619	G2

TRANSISTORS

Designation	Type	Code No.	Shown in Fig.
Q1	transistor 2N4124	360-086	G2
Q2	transistor 2N4126	360-082	G2
Q3	transistor 2N4126	360-082	G2
Q4	transistor 2N4302	360-067	G2
Q5	transistor BC147	360-074	G2
Q6	transistor 2N4126	360-082	G2
Q9	transistor BC147	360-074	G2

RESISTORS

Designation	Type	Value	Code No.	Shown in Fig.
R1	carbon film	100 MΩ 5% 0.5 W	143-014	G2
R2	carbon film	100 MΩ 5% 0.5 W	143-014	G2

xindicates special parts manufactured by Radiometer.

R3	carbon film	100 kΩ 5% 0.5 W	106-610	G2
R4	carbon film	6.8 kΩ 5% 0.2 W	106-468	G2
R5	carbon film	33 kΩ 5% 0.2 W	106-533	G2
R6	carbon film	10 kΩ 5% 0.2 W	106-510	G2
R7	carbon film	270 Ω 5% 0.2 W	106-327	G2
R8	carbon film	2.7 kΩ 5% 0.2 W	106-427	G2
R9	carbon film	5.6 kΩ 5% 0.2 W	106-456	G2
R10	carbon film	3.9 kΩ 5% 0.2 W	106-439	G2
R11	carbon film	820 Ω 5% 0.2 W	106-382	G2
R12	carbon film	4.7 kΩ 5% 0.2 W	106-447	G2
R13	carbon film	10 kΩ 5% 0.2 W	106-510	G2
R14	carbon film	6.8 kΩ 5% 0.2 W	106-468	G2
R15	carbon film	15 Ω 5% 0.2 W	106-215	G2
R17	carbon film	3.3 kΩ 5% 0.2 W	106-433	G2
R18	carbon film	8.2 kΩ 5% 0.2 W	106-482	G2
R19	carbon film	6.8 kΩ 5% 0.2 W	106-468	G2
R20	carbon film	1.5 kΩ 5% 0.2 W	106-415	G2
R22	carbon film	2.2 kΩ 5% 0.2 W	106-422	G2
R24	carbon film	18 kΩ 5% 0.2 W	106-518	G2
R27	carbon film	180 kΩ 5% 0.2 W	106-618	G2
R28	carbon film	10 kΩ 5% 0.2 W	106-510	G2
R29	carbon film	220 Ω 5% 0.2 W	106-322	G2
R30	carbon film	15 kΩ 5% 0.2 W	106-515	G2

TRANSFORMER

Designation	Type	Code No.	Shown in Fig.
xT1	transformer	770-595	G2

MISCELLANEOUS

Type	Code No.	Shown in Fig.
teflon lead, 0.08 m	642-004	G2
teflon insulator	823-904	G2
insulator	826-100	G2

xindicates special parts manufactured by Radiometer.

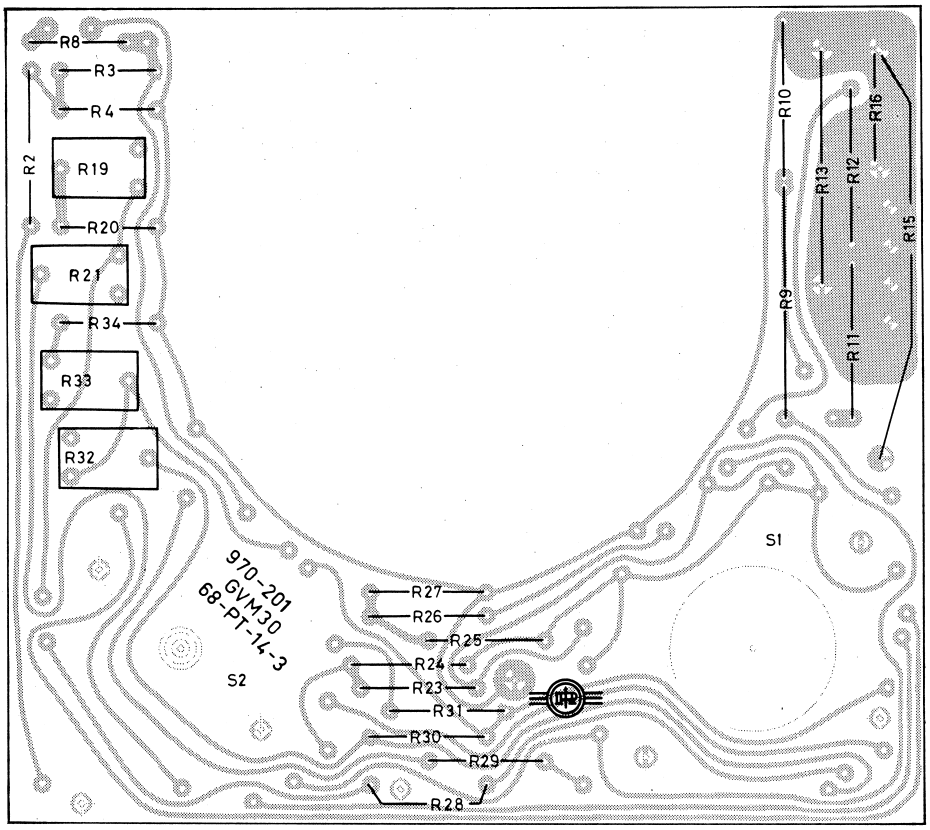
R8
R3
R4
R2
R19
R20
R21
R34
R33
R32
R10
R16
R13
R12
R15
R9
R11
S1
970-201
GVM30
68-PT-14-3
S2
R27
R26
R25
R24
R23
R31
R30
R29
R28

Fig. G1

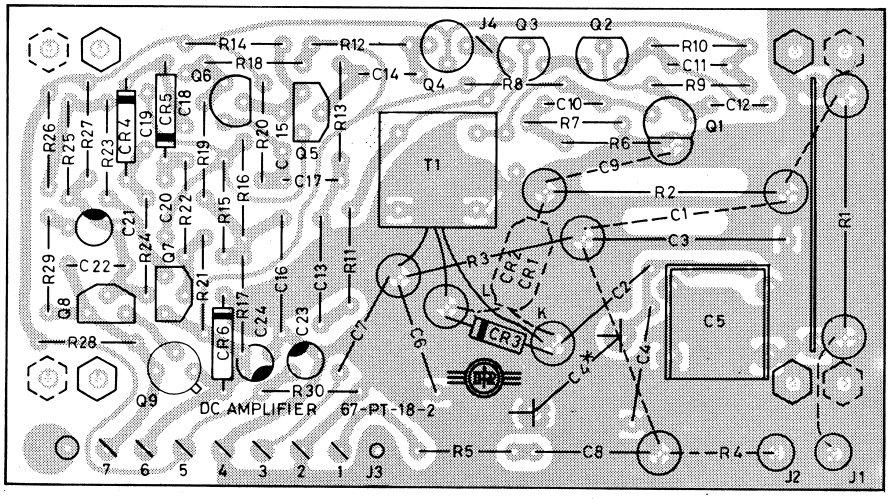
J4
Q3
Q2
R14
R12
R10
R18
C14
C11
Q4
R8
R9
C10
C12
R7
Q1
R6
C9
T1
R2
C1
C3
R3
CR2
CR1
C2
C5
CR3
C4
C6
C7
R1
R5
C8
R4
J2
J1
J3
7
6
5
4
3
2
1
R30
DC AMPLIFIER
67-PT-18-2
Q9
R28
Q8
C22
R29
R26
R25
R27
R23
CR4
C19
CR5
C18
Q6
R20
C15
Q5
R13
C17
R19
R16
C20
R22
R15
C21
R24
Q7
R21
R17
CR6
C24
C23
C16
C13
R11

Fig. G2

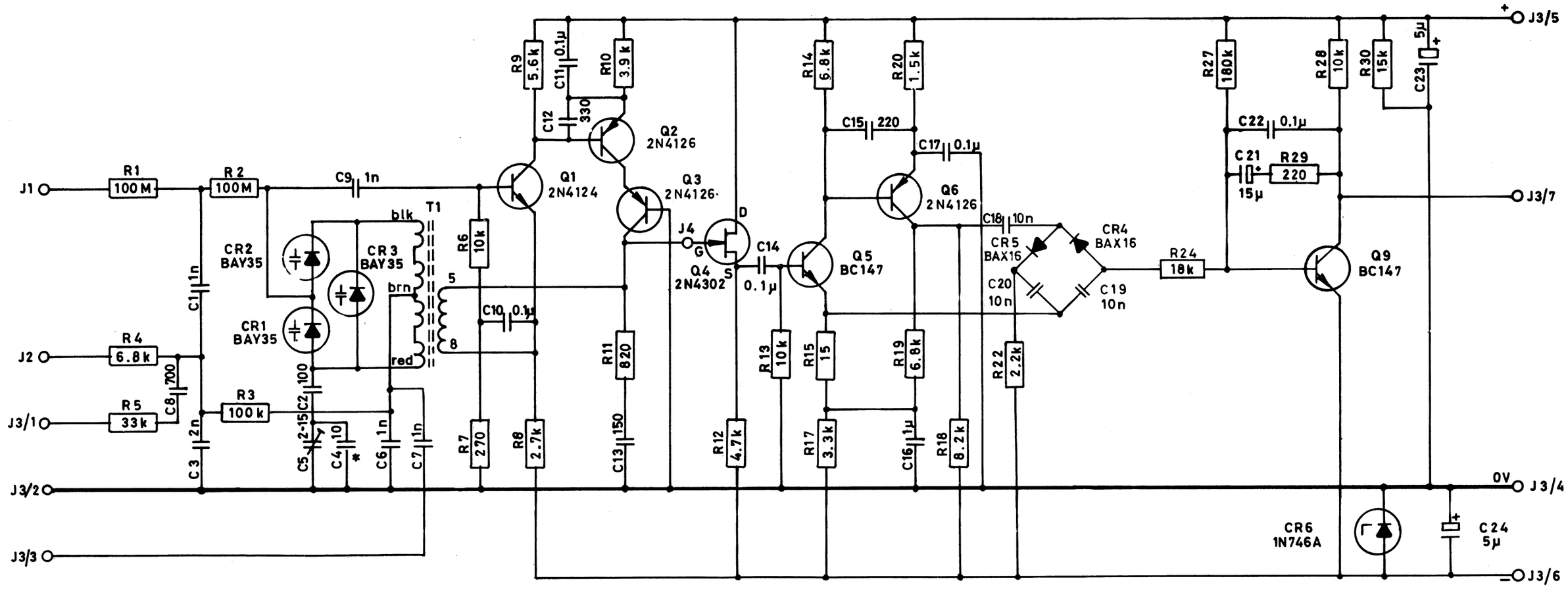

VALUES IN Ω OR pF IF NOT OTHERWISE SPECIFIED.

* FINAL VALUE FACTORY ADJUSTED

P.N	Erstat. No.	Dato	Rt. af	Kont	Norm.
3	71-8358	16.12.68	SHM	Cwl	
2	71-8635	29.1.68	EA	pn	
1	71-8633	23.10.67	EA	pn	

RADIOMETER COPENHAGEN
72 EMDRUPVEJ NV

Malestok /

Tegn.	EA	12.10.67
Kont.	pn	17-10-67
Norm.		

dc Amplifier 9V
TYPE 900-005 & 900-008
From no. to no.

Erstatter
1769-A2
Erstattes af

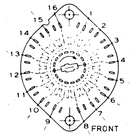

POSITION OF CONTACTS
ON S1.
SEEN FROM FRONT.

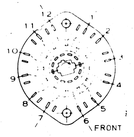

POSITION OF CONTACTS
ON S2.
SEEN FROM FRONT.

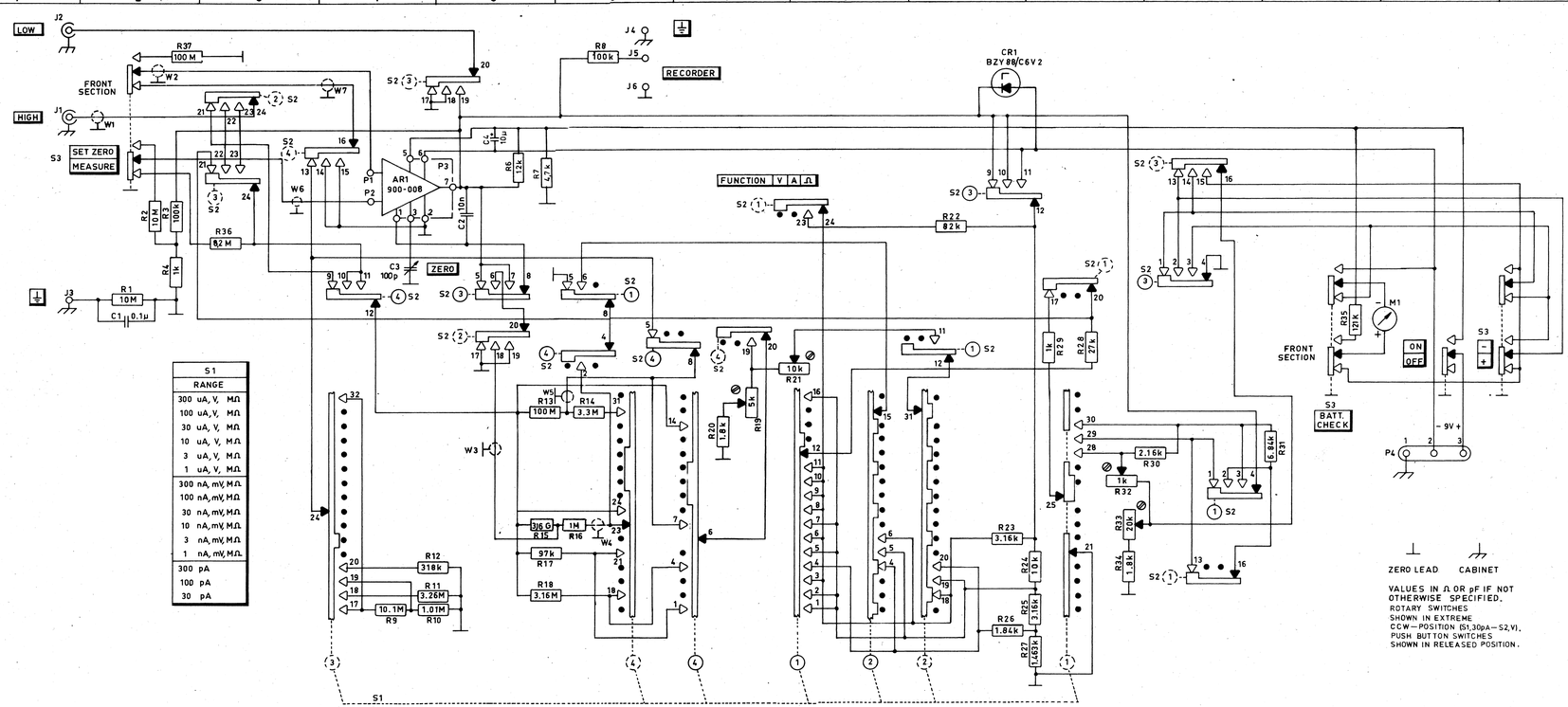

S1
RANGE
300 uA, V, MΩ
100 uA, V, MΩ
30 uA, V, MΩ
10 uA, V, MΩ
3 uA, V, MΩ
1 uA, V, MΩ
300 nA, mV, MΩ
100 nA, mV, MΩ
30 nA, mV, MΩ
10 nA, mV, MΩ
3 nA, mV, MΩ
1 nA, mV, MΩ
300 pA
100 pA
30 pA

VALUES IN Ω OR pF IF NOT OTHERWISE SPECIFIED.
ROTARY SWITCHES SHOWN IN EXTREME CCW-POSITION (S1,30pA-S2,V).
PUSH BUTTON SWITCHES SHOWN IN RELEASED POSITION.

Rev.	Tr. Ref. No.	Date	Sig. of	Kontr.	Appr.
6	144510	6.3.70	OH		PK
5	138920	27.3.69	SHM		PK
4	138870	13.11.68			PK
3	134730	9.9.68	SHM		
2	133139	2.9.68	EH		PK
7	172311	6.8.70	OH	OJL	PK

RADIOMETER COPENHAGEN
72 EMDRUPVEJ NV

ELECTRONIC GALVANOMETER
TYPE GVM 30-0 a
From no. 130036 to no.

Malestok	Tegn.	EA	28.5.68
	Kontr.	OSL	28.5.68
	Godk.	PK	20.5.68

Erstatter
1220-A1