INSTRUCTION MANUAL

Sailor

TYPE R108
R109

A/S S. P. RADIO

AALBORG - DENMARK

INSTRUCTION MANUAL

Sailor TYPE R108 R109

A/S S. P. RADIO

9000 AALBORG - DENMARK

CONTENTS

A. Description of SAILOR Type R108/R109

I. General

The SAILOR Type R108/R109 is a splashproof transistorised marine receiver for operation on built-in dry cells or from the vessel's lighting system.

The receiver is designed for general broadcast, telephony and telegraphy reception, and for taking bearings of Consol radio beacons, circular radio beacons and broadcasting stations. When operated with a direction-finding aerial the receiver is capable of direction finding on four bands. The R109 can also receive FM broadcasting.

A front panel meter facilitates rapid tuning and serves as minimum-signal indicator for direction finding. The meter is also used for checking the voltage of the built-in battery.

A beat-frequency oscillator (BFO) is provided for reception of telegraphy signals and for taking bearings of Consol radio beacons. A bandwidth-reducing filter in the receiver's AF section can be switched in to improve reception of radio beacons.

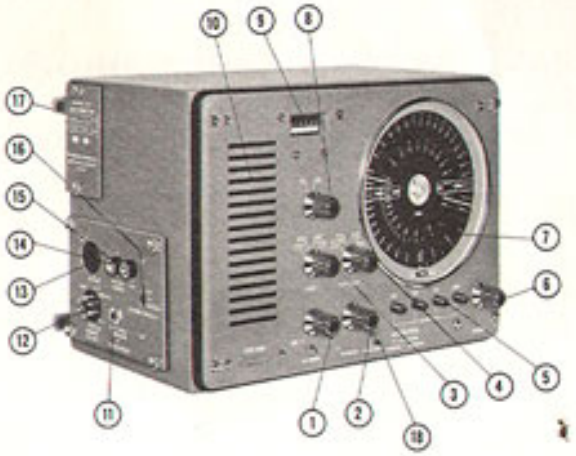

II. Function

1. AF GAIN – VOLUME CONTROL
   Controls volume and is equipped with on/off switch.
2. RF GAIN – SENSITIVITY CONTROL
   Controls the receiver's sensitivity level.
3. TONE – TONE SWITCH
   With this switch in the HIGH (clear) position, the full tone range is reproduced. The MED position provides moderate treble cut; the LOW position, strong treble cut.

   In the FILTER position, the tone range around 1000 Hz is accentuated.

4. FUNCTION – FUNCTION SWITCH (for AM reception)
With this switch you decide if the incoming signal is to be picked up via the normal aerial (switch in HI-IMP position) or via the direction-finding equipment (Ferrite Navigator/Direction-Finding Loop) with the switch in the DF position.
The receiver has a beat-frequency oscillator (BFO) for reception of unmodulated telegraphy and taking bearings of Consol radio beacons and unmodulated circular radio beacons. The BFO can be switched on (BFO ON) and off (BFO OFF) in the HI-IMP as well as in the DF position.
The R108/R109 has automatic volume control (AGC). This is operative with the function switch in the HI-IMP position. In addition, the sensitivity control covers a range wide enough to enable removal of the atmospheric background noise appearing when the incoming signal disappears.
In the DF position, the automatic volume control is inoperative. This implies that the receiver's sensitivity level must be adjusted for a convenient meter reading, using the RF GAIN control. However, the automatic volume control begins functioning when the incoming signal exceeds a level representing twice full-scale meter reading. This function has been introduced to ensure that incorrect handling will have the least possible effect on results obtained.

5. BANDS – ROW OF PUSH-BUTTONS
for selecting between

Long wave	LW	150– 260 kHz
Navigation wave	NW	250– 430 kHz
Medium wave	MW	495–1610 kHz
Short wave	SW	1600–4500 kHz

6. TUNING

7. DIAL
Calibrated in kHz.
The rim of the dial has a white ring on which the most frequently received stations may be marked in pencil.

8. R108:
DIAL LIGHT – SWITCH
for selecting between two brilliance levels. NORMAL for use in partial darkness and DIMMED for use at night.
In order to avoid unwanted battery drain, the light turns off automatically when the knob is released.
R109:
AM/FM SWITCH.
Selects between AM and FM bands.

9. METER
10. BUILT-IN SPEAKER
    8 ohms, with large diaphragm and magnet.
11. Ext. 8-ohm SPEAKER or HEADPHONES
    Connection for external 8-ohm speaker or headphones.
    Plug: Unipolar jack plug.
12. POWER
    Connection for earth and external power supply, 12–32 V without voltage switching.
    Socket: Hirschmann Mek 60 bz.
13. DF
    Connection for BK171 or FB175 direction-finding equipment.
    Plug: Hirschmann Mes 60 bz.
14. HI-IMP AERIAL
    Connection for wire aerial.
    Plug: Belling & Lee.
15. FM-AERIAL
    Socket: Belling & Lee.
    Connection for FM aerial.
16. POWER SWITCH
    Selects between internal or external power supply, and Battery Test.
17. BATTERY BOX COVER
    Instructions for battery replacement are given on the battery cover.
18. Dial light (R109 only).

III. Technical Data

1. Bands:

Long wave	LW	150– 260 kHz
Navigation wave	NW	250– 430 kHz
Medium wave	MW	495–1610 kHz
Short wave	SW	1600–4500 kHz
	FM	88– 108 MHz

2. Sensitivity:
   10 dB (S+N)/N (modulation 30 % – 400 Hz).
   Tone switch at HIGH
   LW better than 5 μV
   NW better than 4 μV
   MW better than 4 μV
   SW better than 3 μV
   FM better than 1 μV 20 dB S+N/N ▲ f = ±22.5 KHz

3. Image Rejection:
   LW > 90 dB NW > 80 dB MW > 70 dB SW > 60 dB
   FM > 45 dB
4. Intermediate Frequency:
   AM: 462 KHz FM: 10.7 MHz
5. Selectivity:
   AM: Typically ±4 KHz –6 dB
   ±8 KHz –60 dB
   FM: ±120 KHz –3 dB
6. AGC Characteristic:
   Increasing the input voltage from 100 μV to 300 mV causes a 1 dB change in output voltage.
7. AF Caracteristic: (AM) only)
   HIGH : 4 kHz –6 dB
   MED : 1.2 kHz –6 dB
   LOW : 600 Hz –6 dB
   FILTER: 1 kHz ±300 Hz
8. AF Output:
   1.6 watts at less than 5 % distortion.
9. Power Supply:
   Built-in power supply:
   Six 1.5-volt dry cells (Hellesen Type 736 IEC R20). Always use All Steel (leak-proof) cells.
   External power supply:
   12–32 volts without voltage switching.
10. Cabinet and Finish:
   All-welded Rilsan rust-proofed steel cabinet. All controls and the ornamental ring are of bright chromium-plated brass.

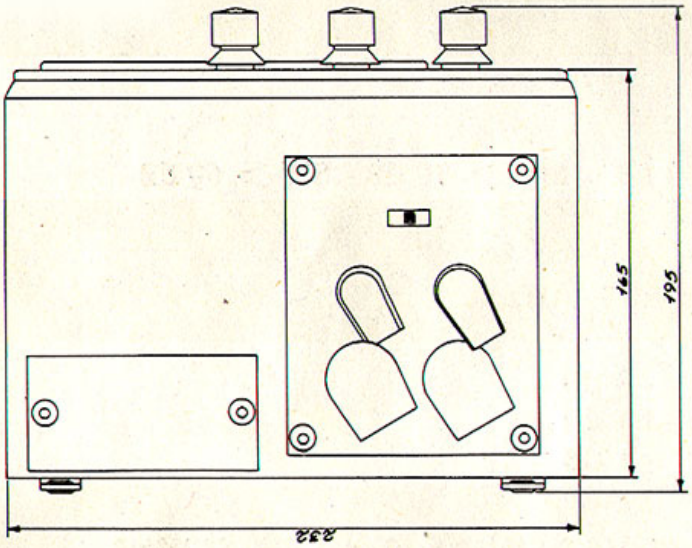

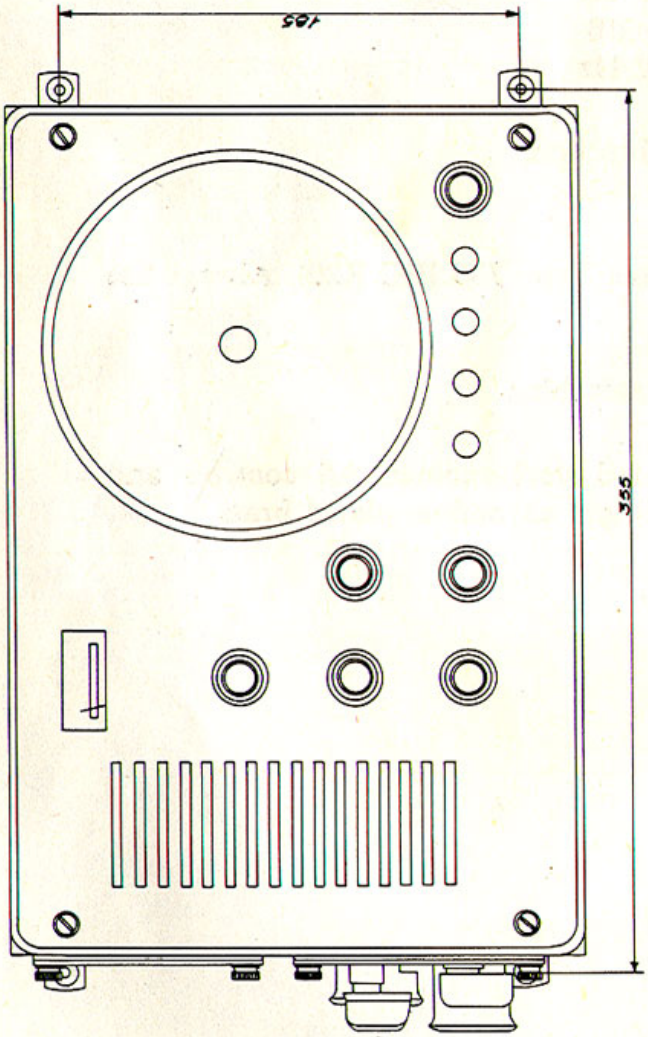

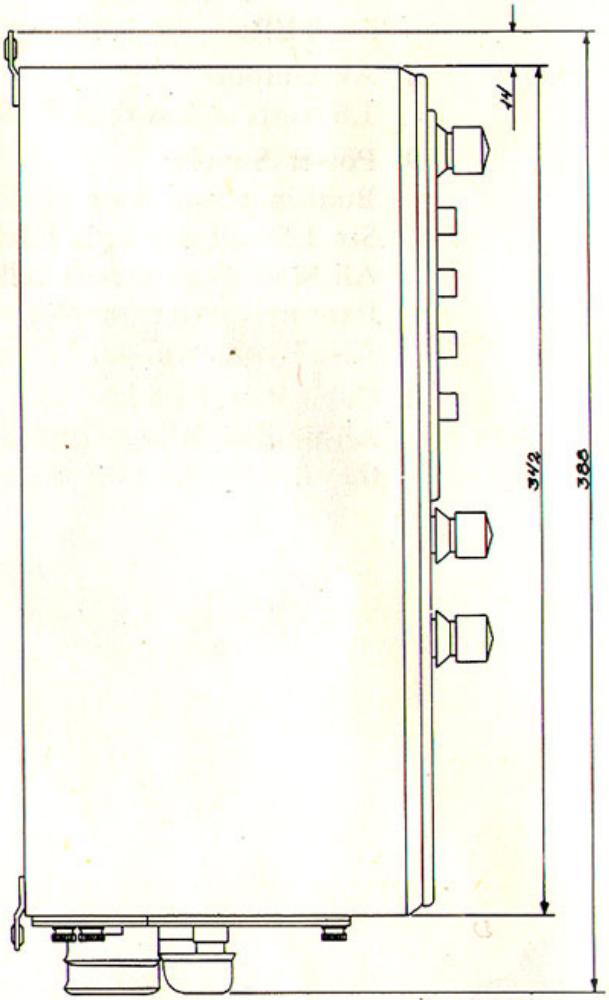

B. Installation of SAILOR Type R108/R109

I. Wire Aerial and FM Aerial

The external aerial plugs into the socket marked HI-IMP AERIAL.

The aerial should consist of a wire 5–15 metres long and placed as high and in the clear as possible. Good-quality coaxial cable should be used for the down-lead. It is of decisive importance to keep the down-lead as short as possible and install it so that it is clear of other electric cables. All joints should be soldered. For best FM reception, an FM aerial should be plugged into the socket marked FM AERIAL. Use a horizontally polarised omnidirectional aerial. If a separate FM aerial is not connected to the set, FM will be automatically received from the wire aerial.

Use of a separate FM aerial is recommended in the interests of best reception.

II. Installation of Direction-Finding Equipment

SAILOR BK171 Ferrite Navigator

The BK171 plugs into the multisocket marked DF on the side cover of the receiver cabinet.

Permanently Installed Direction-Finding Loop

Plug the SAILOR FB175 Transformer Box into the multisocket marked DF on the side cover. Place the Transformer Box as close to the R108 as possible.

The SAILOR 26F or 26FA Direction-Finding Loop should be placed as much in the clear as possible. The double-screened cable between the Transformer Box and the Direction-Finding Loop may have any length between 0.5 and 4 metres.

The sense aerial should be a vertical aerial, 3–15 metres long. For connection of the sense aerial see the installation instructions supplied with the FB175.

III. Speaker and Headphones:

A speaker and/or headphones plug(s) into the socket marked Ext. 8-ohm SPEAKER or HEADPHONES.

IV. External Power Supply

An external power supply and earth should be connected at the EXT. POWER multiplug. Be sure to observe correct polarity.

The receiver may be operated on all DC voltages between 12 and 32 volts without switching.

The fuse, one 1-amp. unit, is placed to the left in the bottom of the receiver and becomes accessible after the receiver has been removed from its cabinet.

Before applying power to the receiver, any ignition systems, dynamos and electric motors on board must be effectively treated to suppress noise. This is of decisive importance if the full benefit of the receiver is to be realised.

The earth connection should consist of not less than 2.5 mm^2 insulated copper cable and go to the hull (in iron vessels) or keel bolt, engine base, or not less than 1 m^2 metal sheet on the outside of the hull below the water line (in wooden vessels). The earth wire should be as short as possible. A good earth connection is of considerable importance for noise-free reception and sharp direction-finding minima.

V. Internal Power Supply

The internal battery is located behind the cover marked BATTERY BOX. Six 1.5-volt dry cells should be used for replacement (Hellesen Type 736 or equivalent). Be sure to observe correct cell polarity (see drawing on cover).

The voltage of the built-in battery can be checked with the power supply switch (POWER) in the BATT. TEST position. The battery should be replaced when the voltage goes below 7 volts (meter reading = 3.5).

Warning: Do not leave a spent battery in the battery box.

Spent batteries leak acid which may damage the set beyond repair.

C. Operating the SAILOR Type R108/R109

I. General Broadcast Reception:

AM Broadcasting:

1. Set POWER SWITCH to the desired type of power supply.
2. Apply power to the receiver by turning its volume control (AF GAIN) clockwise.
3. Set FUNCTION switch to HI-IMP aerial without BFO (BFO OFF). Set AM/FM switch to AM.
4. Depress the push-button for the wave band of your choice (in the row marked BANDS). Most broadcasting stations are in the medium wave (MW) and long wave (LW) bands.
5. For broadcast reception, set the sensitivity control (RF GAIN) to maximum.

6. Set the volume control (AF GAIN) to desired volume.
7. Set TUNING to the station of your choice. Tune for maximum meter reading. If you want the dial lighted, turn the DIAL LIGHT knob.
8. Set TONE switch for the desired type of AF response. The HIGH, MED and LOW positions may be used for broadcast reception.

FM BROADCASTING (R109 only):

1. Set POWER SWITCH to the desired type of power supply.
2. Apply power to the receiver by turning its volume control (AF GAIN) clockwise.
3. Set AM/FM switch to FM.
4. Set TUNING to the station of your choice. Tune for maximum meter reading. If you want the dial lighted, depress the DIAL LIGHT knob.

II. Telephony and Telegraphy Reception

1. Set POWER SWITCH for the type of power supply you wish to use.
2. Apply power to the receiver by turning its volume control (AF GAIN) clockwise.
3. Set FUNCTION switch to HI-IMP BFO OFF, for telephony reception; or to HI-IMP BFO ON, for telegraphy reception.
4. Depress the push-button for the wave of your choice (in row marked BANDS). Most communication stations are in the short-wave (SW) band.
5. For telephony reception, use both the sensitivity (RF GAIN) and the volume (AF GAIN) controls for adjustment of volume, selecting that combination of settings of the two controls which provides minimum noise interference in the given situation.
   For telegraphy reception, the volume control will usually be set to maximum, using only the sensitivity control for adjustment of volume.
6. Set the TUNING control to the station of your choice. If you want the dial lighted, turn the DIAL LIGHT knob.
7. For telephony reception, set the TONE switch to either HIGH, MEDIUM or LOW.
   For telegraphy reception use either the LOW or the FILTER position.
8. Telegraphy reception requires precise setting of the TUNING control. Tune carefully for maximum volume.

III. Taking Bearings of Consol Radio Beacons

Set the receiver's controls as for telegraphy reception under II (for complete instructions see Chapter D).

D. Taking Bearings of Consol Radio Beacons (not possible on FM Broadcast band)

I. Description of the Consol Direction-Finding System

The following should be taken only as an introduction to the Consol direction-finding system. For additional information about the subject reference should be made to the publications issued by the proper government authorities.

Using the Consol direction-finding system it is possible to determine one's exact position, provided the approximate position is known, by taking cross bearings of two Consol radio beacons with the SAILOR R108 or R109.

A Consol beacon consists of a circular radio beacon which transmits the beacon's call sign and a continuous signal, and a directional beacon which transmits different signals in different directions. Transmissions take place alternately as specified in »Details for Stavanger and Bush Mills Consol Radio Beacons«. The circular transmission serves for tuning the receiver to the wanted beacon, as to a general telegraphy station, see Section II of Chapter C. Below is shown a chart with two stations, Stavanger and Bush Mills, of special interest in the North Sea and North Atlantic. For each of the two stations are indicated the moments at which transmissions of the directional beacons start. These transmissions consist of sectors.
Every second sector (the A sectors) comprises 60 dots; the other sectors (the B sectors) consists of 60 dashes. These signals are transmitted for a period whose length is indicated on the chart. The dividing lines between sectors are indicated as »beams«. Along each beam, dots and dashes unite into a continuous signal. The sectors rotate in the directions of the arrows at the uniform speed of exactly one sector-width during the time a transmission from a directional beacon is in progress. Hence, from the position marked X in the North Sea you will hear from the Stavanger Consol radio beacon first 48 dots until the »S« beam passes by, then 12 dashes, ending the transmission. This is followed by a circular transmission, etc. etc. From Bush Mills, you will first hear 28 dashes until the passage of the »BM« beam, after which 32 dots will be heard. It will then be easy, using the quite simple diagrams issued by the proper government authorities, to determine the exact bearings of the Consol beacons as the diagrams give the bearing in degrees corresponding to the number of dots and dashes heard since the moment the directional transmission started.

Near the beams, since these are not sharply defined, a number of dots and dashes will not be heard, or heard only indistinctly. Accordingly, you count all dots and dashes during a transmission period.

If you count, say a total of 54 dots and dashes it means that 60 – 54 = 6 characters have been lost. This number you divide into 3 dots and 3 dashes and add these to the number counted. You now have the figure to be used for plotting on the diagram.

Maximum bearing accuracy is obtained near the beam centre, where it averages ±0.2°, decreasing as the ambiguous sectors are approached. In sectors bordering on the ambiguous sectors, errors of ±0.5° by day and ±1.5° by night must be expected. Bearings should not be taken in the ambiguous sectors and less than 25 nautical miles from Consol radio beacons.

II. Details for Stavanger and Bush Mills Consol Radio Beacons

STAVANGER:

Position:	58°, 37', 32" N. 5°, 37', 49" E.	
Frequency:	319 kHz (940 m).	
Call sign.:	LEC ._.. . _._.	
Signal: A.	Gen. circular transmission	
	1. Letters LEC	6 sec.
	2. 1 long dash	50 sec.
	3. Pause	3 sec.
B.	Directional transmission	
	1 dot or dash every second	60 sec.
	Pause	1 sec.

Total duration of each transmission period is therefore 120 sec.
Transmitting schedule: Round the clock. – Range: approx. 850–1300 nautical miles.

BUSH MILLS:

Position:	55°, 12', 20" N. 6°, 28', 0.2" W.	
Frequency:	266 kHz (1128 m).	
Call sign.:	MWN __ .__ _.	
Signal: A.	General circular transmission	
	Continuous transmission interrupted by call sign	30 sec.
B.	Directional transmission	
	1 dot or dash every 0.5 sec.	30 sec.
Total transmission period		60 sec.

Transmitting schedule: Round the clock except between 15:00 and 15:15 GMT.

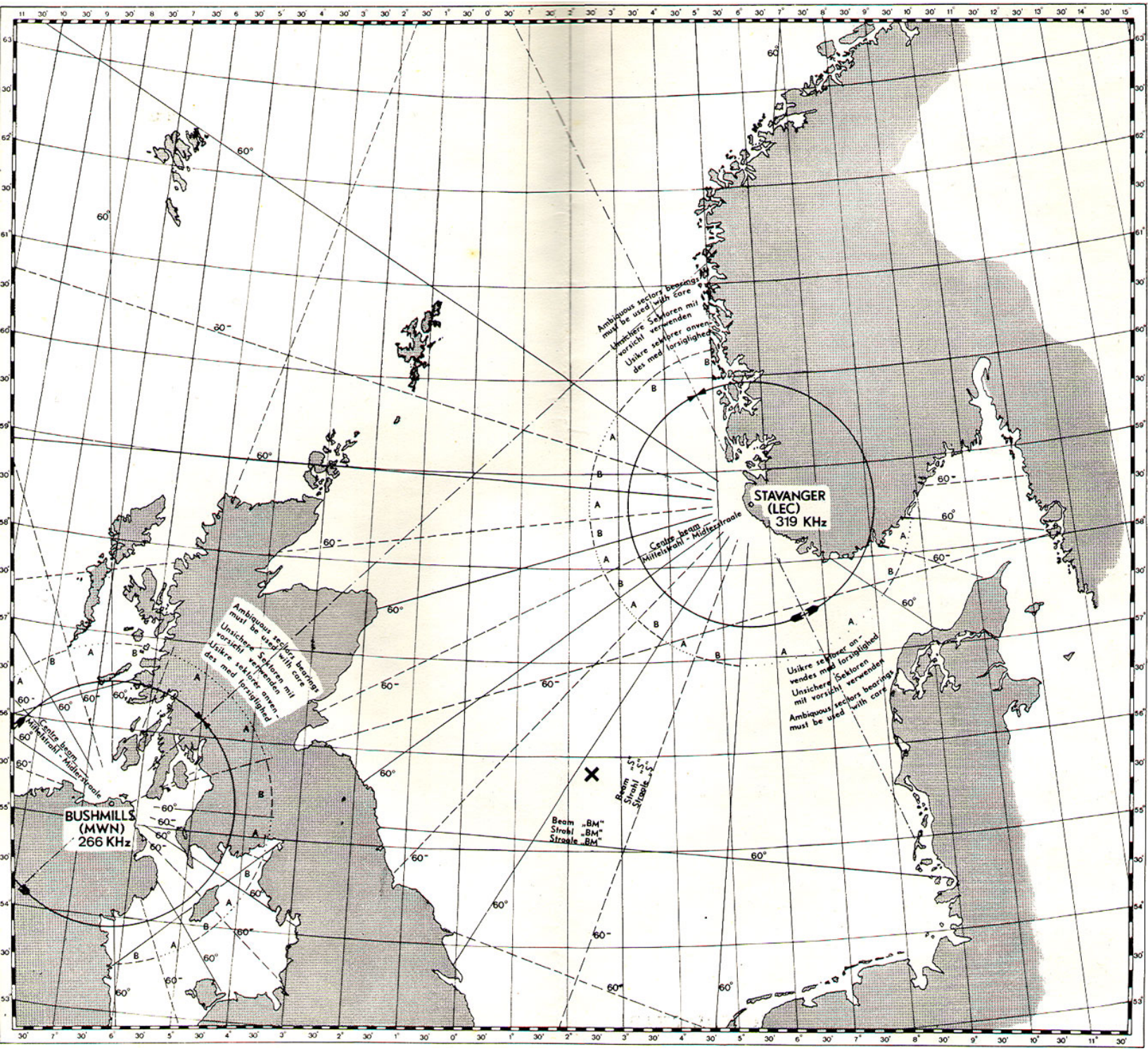

E. Taking Bearings of General Circular Radio Beacons

I. Principle

Determining one's position by direction finding is done by taking compass bearings of not less than two, preferably three or four radio beacons of known geographical locations. These compass bearings are plotted on a chart, and their intersection point indicates the position of the vessel.

Compass bearings are taken by means of a direction finder connected to the receiver. A direction finder can take various forms but always comprises a directional aerial and one or more dials calibrated in degrees. When the direction finder is rotated, the signal strength will be dependent on the angle between the direction-finding aerial and the direction to the beacon. If rotated 360°, the direction finder will pass through two maxima and two minima. The two minima, which are spaced 180° apart, are better defined than the maxima and are therefore employed for direction finding. Consequently, using the direction finder you can determine the exact direction to the beacon, reading the direction on the graduated dial either as an angle relative to the vessel's centerline (in which case the angle is called the relative bearing) or as an angle relative to north (the compass bearing).

If the direction finder gives the relative bearing, the compass bearing can be found by adding the relative bearing to the compass course.

On SAILOR direction-finding loops, this addition can be done by setting another graduated dial according to the compass course.

As stated above, two minima will be found on rotating the direction finder 360°, and only one of these minima is the correct one, the other being 180° opposite. However, using the sensing device of the direction finder you can determine which minimum is the correct one. This operation is known as sense determination and is described in detail in the sections covering the individual direction finders.

Direction finding can be done on all bands (BANDS). However, a certain amount of inaccuracy should be expected when taking bearings of stations other than actual radio beacons. The reason is that radio beacons are built and set up with special attention being given to their application.

The fundamental principle when setting the receiver for taking bearings of one or more stations transmitting on the same frequency is first to tune the receiver to the station on the general aerial, thereafter switching to the direction-finding aerial and doing the actual direction-finding job.

The old saying that practice makes perfect applies here too. You cannot expect good results without previous training.

It is therefore very important to practice the procedure described in item V or VI (depending on the type of direction finder employed) under good weather conditions at a known position.

II. Sources of Errors

The following factors are possible causes of errors in radiolocation work:

1. Magnetic variation.
2. Local compass error.
3. Local radio direction finder error.
4. Coastal refraction.
5. Night effect.

To determine the compass bearing of a beacon by means of the radio direction finder, the compass course is used as starting point as described in the preceding section, bearing in mind that:

True course = compapss course (read course) + variation + local compass error.

The variation is taken from a chart, and the local compass error from the local compass error table, in the usual manner.

The local radio direction finder error is due to the action of the vessel's metal parts such as rigging, mast, hull etc. It is dependent on the location of the direction-finding aerial on the vessel and on the angle of the bearing relative to the vessel's center line. Hence bearings should always be taken from the same place on the vessel.

Also, a correction table should be drawn up for the direction finder operated in that particular place.

To make such a table, the vessel is swung near a radio beacon within optical sight, finding at every 10° or so the difference between optical relative and radio relative bearing.

Coastal refraction may occur where beacon signals must travel partly over land and partly over the sea to reach the vessel or if they leave the shore at a very acute angle. The use of radio beacons should therefore be avoided where these possibilities of errors exist.

Night effect is a bearing error due to intermixing of radio signals reaching the receiver along the surface of the earth and radio signals arriving after having been reflected from the ionosphere. This effect is especially in evidence at night, in particular from one hour before to one hour after sunset and sunrise, and manifests itself as flattening and/or »creeping« of minima. The night effect also varies with the seasons, and is dependent on the geographical position, being smallest at the equator. Under such conditions it is advisable to employ beacons that are as near the vessel as possible and to employ bearings with some caution. If more than one frequency is available, the lowest should as a rule be preferred. This will provide maximum bearing accuracy with a minimum of disturbance from fading and night effect.

Example of Correction Table for Radio Direction Finder:

Read Relative Bearing	Correction	Read Relative Bearing	Correction
0°	0	190°	+1
10°	+2	200°	+3
20°	+4	210°	+5
30°	+6	220°	+7
40°	+7	230°	+8
50°	+7	240°	+9
60°	+7	250°	+8
70°	+6	260°	+7
80°	+4	270°	+5
90°	+2	280°	+2
100°	0	290°	0
110°	—2	300°	—3
120°	—4	310°	—4
130°	—5	320°	—4
140°	—5	330°	—4
150°	—4	340°	—3
160°	—3	350°	—2
170°	—1	360°	0
180°	+1		

Correction = Optical relative bearing minus read radio relative bearing

III. Wave Types (types of transmission)

The R108/R109 is designed for the reception of four different wave types:

A_0: Constant unmodulated carrier. This wave type can be received only on receivers which, like the R108/R109, are equipped with a beat-frequency oscillator (BFO). (The BFO converts the unmodulated signal so that it can be perceived acoustically).
The A_0 signal is excellently suited for taking bearings but has the considerable drawback that station identification is difficult (all stations sound the same).
A_0 occurs rarely in radio direction finding.

A_1: Unmodulated telegraphy. Morse characters are produced by turning an unmodulated carrier on and off. Reception of such a carrier requires a BFO.
A_1 is rarely used in radio direction finding.

A_2: Modulated telegraphy. Morse characters are produced by interrupted tone modulation on a constant carrier (less often both modulation and carrier are interrupted simultaneously).
A_2 is generally received without a BFO, but use of the BFO can be an advantage under certain conditions.

A_2 is without comparison the most widely used wave type for radio beacons.

A_3: General broadcasting and AM telephony The carrier is modulated with music or speech.
A BFO is not normally used for reception of this wave type. However, using a BFO will often be advantageous if it is desired to take the bearing of an A_3 signal.
A_3 is never used by actual radio beacons.

IV. Selecting a Direction Finder

Two types of direction finder are available for the SAILOR R108/R109:

1. SAILOR BK171 Ferrite Navigator

This direction finder is specially suited for use in small boats of plastic or wood.
Advantages of this equipment are simple operation, modest space requirements, simple installation, insensitivity to heeling (sailing boats), and a fixed-mounted sense aerial.

The BK171 is not suited for use in metal vessels.

2. Permanently Installed Loop

SAILOR 26F/FB175 or

SAILOR 26FA/FB175.

This type of equipment should be chosen for larger, spacious vessels and for fishing craft and coasters.

These direction finders are more difficult to install and operate than the Ferrite Navigator, but if used by a skilled operator and the vessel can be kept on a stable course while bearings are being taken it will provide somewhat better accuracy than is possible with the BK171 Ferrite Navigator.

V. Direction-Finding Using Conventional Permanently Installed Radio Direction Finder

1. Apply power to the receiver by turning the volume control (AF GAIN) clockwise. Set AM/FM switch to AM. (Only R109).
2. Set the function switch (FUNCTION) to HI-IMP BFO OFF (if wave type used by beacon is A_0 or A_1, use HI-IMP BFO ON).
3. Depress proper button in row marked BANDS.
4. Set sensitivity control (RF GAIN) to maximum.
5. Set dial to beacon frequency. When beacon is heard, retune for max. volume. Readjust volume control (AF GAIN) if necessary.
6. Set TONE switch to the position (HIGH, MED, LOW or FILTER) providing best possible signal.
7. Switch from conventional aerial to direction-finding aerial by turning the FUNCTION knob two steps clockwise (e.g. from HI-IMP BFO OFF to DF BFO OFF).
8. Select on the Direction Finder (FB175) the wave band corresponding to the receiver setting and rotate the TUNE knob of the Direction Finder for maximum volume.
9. Rotate the sensitivity control (RF GAIN) until convenient meter reading is obtained (approx. half-scale deflection).

   Readjust volume if necessary, using the volume control (AF GAIN).
10. Set the loose graduated disc so that 360° is against the red pointer.
11. Rotate the Direction Finder until a minimum is obtained.

    A minimum is indicated either by minimum signal in the headphones or speaker, or by minimum receiver meter reading. Lock the Direction Finding Loop, using the grub screw, and note down *true* compass course at the moment the bearing is taken.

12. Read the relative bearing against the blue pointer, and read in the Direction Finder's correction table the amount of correction corresponding to that relative bearing.

13. Add the correction found under item 12 to the *true* compass course noted down under item 11 and rotate the plexiglass dial until the red pointer is against the degree number found by the addition.

14. Read, against the blue pointer, the *true* radio compass bearing.

15. If required, the sense-direction can be found by rotating the direction-finding loop approx. 90° anti-clockwise (90° opposite sun). If the volume (meter reading) increases when the SENSE button is pressed, the radio compass bearing found under item 14 is the course *towards* the radio beacon whereas decreasing signal strength indicates that the course is *away* from the beacon.

Example

A bearing of the Hals Barre Beacon, Denmark, is required. The followin data apply to this beacon:

Transmissing frequency: 310.3 kHz.

Wave type: A_2.

Transmitting schedule: hour + 1 min., hour + 4 min., hour + 7 min.

Identification signal: Morse code for HB: .... _...

a. Tune the receiver and direction finder to 310.3 kHz as described under items 1 to 10 inclusive.

b. Wait until the Morse code for HB are heard (several beacons transmit on the same frequency).

c. Perform item 11.
True compass course is noted down as being 270° (found as read compass course + variation + local compass error).

d. Perform item 12.
Relative bearing is read against the blue pointer as being 90°. The correction for the direction finder is found by connecting 90° in the table with + 2° (example on page 16).

e. Set, by rotating the plexiglass dial, the red pointer against 270° + 2° = 272° (item 13).

f. Read, against the blue pointer, the true radio compass bearing as being 2°.

g. Perform sensing as described under item 15.
The signal strength decreases when the SENSE button is pressed. The true radio compass bearing read under item f is therefor the course away from the beacon.
(The course *towards* the beacon is 180° + 2° = 182°).

VI. Direction-Finding Using the SAILOR Type BK171 Ferrite Navigator

1. Apply power to the receiver by turning the volume control (AF GAIN) clockwise. Set AM/FM switch to AM. (Only R109).
2. Set the function switch (FUNCTION) to HI-IMP BFO OFF. (If wave type used by beacon is A_0 or A_1, use HI-IMP BFO ON).
3. Depress proper button in row marked BANDS.
4. Set sensitivity control (RF GAIN) to max.
5. Set dial to beacon frequency. When beacon is heard, retune for max. volume.
   Readjust volume control (AF GAIN) if necessary.
6. Set TONE switch to the position (HIGH, MED, LOW or FILTER) providing best possible signal.
7. Switch from conventional aerial to direction-finding aerial by turning the FUNCTION knob two steps clockwise (e.g. from HI-IMP BFO OFF to DF BFO OFF).
8. Select on the Ferrite Navigator the wave band corresponding to the receiver setting and rotate the TUNE knob on the Ferrite Navigator for maximum volume.
9. Rotate the sensitivity control (RF GAIN) until convenient meter reading is obtained (approx. halv-scale), and repeat item 8.
   Readjust volume if necessary, using the volume control (AF GAIN).
10. Rotate the Ferrite Navigator until a minimum is obtained. A minimum is indicated either by minimum signal in the headphones or speaker, or by minimum receiver-meter reading.
    A sharper minimum can be obtained by readjusting RF GAIN.
11. The magnetiv radio compass bearing of the beacon can now be read directly in the prism of the bearing compass. (True radio compass bearing is obtained by adding the variation to the read compass bearing).

12. If necessary, the sense-direction can be found by rotating the Ferrite Navigator approx. 90° anti-clockwise and pressing the SENSE button (be sure to install the sense aerial).

    If the volume (meter reading) decreases when the SENSE button is pressed, the radio compass bearing found under item 11 is the course *towards* the beacon whereas increasing signal streng is an indication that the course is *away* from the beacon.

    NOTE: It is important that the meter reads approx. half-scale before pressing SENSE button (adjust with RF GAIN).

    When using a Ferrite Navigator, local compass error and local radio direction finder error are not usually taken into account.

    These correction factors are as a rule small in plastic and wooden boats if regard is paid to the factors covered by Section II of Chapter E.

    The correction for variation referred to under item 11 may also be omitted if consistent use is made of the magnetic compass rose on the chart in fixing one position.

Example

A bearing of the Hals Barre Beacon, Denmark, is required. The following data apply to this beacon:

Transmitting frequency: 310,3 kHz.

Wawe type: A_2.

Transmitting schedule: hour + 1 min., hour + 4 min., hour + 7 min.

Identification signal: Morse code for HB: . . . . — . . .

a. Tune the receiver and Ferrite Navigator as described in items 1 to 9 inclusive.

b. Wait until the Morse code for HB are heard (several near-by beacons transmit on the same frequency).

c. Perform item 11.
   Magnetic radio compass bearing is read as being 180°.

d. Perform sensing as described under item 12.
   The signal strength decreases when the SENSE button is pressed.

Result

Magnetic course towards the beacon = 180°.

To obtain true course, add the variation (of the chart) to the found value of 180°.

F. Service Instructions

I. Adjustment Procedure for SAILOR Type R108/R109

All alignment points are factory sealed, and readjustment should be undertaken only if necessary because af repair.

Requisite Instruments:

Signal generator (e.g. Philips HF Generator PM 5324).
Multimeter
Oscilloscope (switched to AC or DC).

Switch Settings:

Items 1 to 7 incl. should performed with the AM/FM switch in the AM position.
Items 8 to 11 incl. should be performed with the AM/FM switch in the FM position (R109 only).

1. Adjustment of No-signal Current in AF Output Amplifier

1.1 Unsolder resistor R147.
1.2 Switch multimeter to operate as milliammeter and connect between chassis potential and collector of T106.
1.3 Turn AF GAIN potentiometer to minimum.
1.4 With potentiometer P103, adjust no-signal current to 2–3 mA.

2. Zero Adjustment of Front-panel Meter

2.1 Set function switch to HI-IMP. BFO OFF. Turn RF GAIN potentiometer to minimum. No signal at aerial input.
2.2 With potentiometer P104, adjust meter reading to 0.

3. Adjustment of AM Intermediate Frequency:

3.1 Set receiver to short-wave (BANDS – SW). Set function switch to HI-IMP. BFO OFF position. Turn RF-GAIN potentiometer to maximum.
3.2 Connect signal generator through capacitor (approx. 0.1 μF) to base of mixer transistor T101. Set frequency to 462 kHz.
3.3 Adjust coil L115 for maximum meter reading. Signal generator output should be low enough so that meter does not read above 3.
3.4 In the event of faults in the intermediate-frequency filter, with ceramic resonators, the complete unit should be replaced (state filter colour coding if necessary) without realigning coils L201 and L202. At the factory, these coils are adjusted with a sweep generator (5 Hz sweep) for symmetrical curve from at 462 Hz with minimum ripple at top.

4. Adjustment of Intermediate-frequency Series Trap

4.1 Set receiver to navigation band (BANDS – NW) with variable capacitor C129 at minimum capacitance, function switch at DF BFO OFF, and RF GAIN potentiometer at maximum.

4.2 Connect signal generator to capacitor C131 (diodes D101 and D102. Set frequency to 462 kHz.

4.3 Adjust coil L113 for minimum meter reading.

5. Adjustment of Beat Oscillator

5.1 Function switch at DF BFO ON, RF GAIN potentiometer turned to maximum.

5.2 Connect signal generator as in item 3.2.

5.3 Adjust trimmer capacitor C159 for zero beat (or lowest tone) in speaker.

5.4 Thereafter connect multimeter, switched to operate as DC voltmeter, to capacitor C156 and adjust coil L114 for maximum reading (approx. 2–3 V).

6. Adjustment of Oscillator and Signal-frequency Circuits

6.1 Connect signal generator via dummy aerial to aerial socket of receiver (HI-IMP AERIAL).

6.2 Function switch at HI-IMP. BFO ON.

6.3 Adjust the oscillator-, RF-, and mixer circuits, in that order. Adjust the oscillator circuit to zero beat, and the RF and mixer circuits for maximum reading on the front-panel meter. Signal generator output should be low enough so that meter does not read above 3. Use RF GAIN if necessary.

6.4 Adjustment is performed at the following points:

Band	Frequency	Adjustment Points	
		Zero Beat	Max. Reading
LW	155 kHz	L112	L104, L108
	250 kHz	C123	C107, C115
NW	260 kHz	L111	L103, L107
	410 kHz	C124	C108, C116
MW	550 kHz	L110	L102, L106
	1500 kHz	C122	C106, C114
SW	1800 kHz	L109	L101, L105
	4200 kHz	C121	C105, C113

7. Adjustment of Tone Filter

Adjust parallel resonant circuit L301, C301 with dust core of L301 at 1 kHz.
Cut-off frequencies are:
HIGH: 4 kHz MED: 1.2 kHz LOW: 0.6 kHz.

8. Adjustment of FM Intermediate Frequency:

8.1 Connect signal generator through capacitor (approx. 10 nF) to tuner test point, TP. Use sweeped signal with centre frequency of 10.7 MHz.

8.2 Measure intermediate-frequency characteristic at the collector of transistor T401 by means of an oscilloscope connected through a 10:1 probe (max. capacitance 10 pF), sensitivity 5 mV/cm AC.

8.3 With signal generator adjust signal height to 4 cm peak-peak and convenient sweep width.

8.4 Adjust intermediate-frequency coil in tuner IFT for maximum response and symmetrical curve form.

9. Adjustment of Detector Circuit:

9.1 Set signal generator output to approx. 50 μV.

9.2 Connect oscilloscope through above-mentioned probe to detector output (capacitor C407), sensitivity 20 mV/cm AC.

9.3 Adjust coil L401 for symmetrical S-curve form.

10. Adjustment of Indicator Circuit:

10.1 Remove connection from test point TP and set tuning control to a frequency where only hiss is present (no station).

10.2 Switch multimeter to operate as DC voltmeter and connect to detector output (capacitor C407).

10.3 A DC voltage reading should be obtained that equals the no-signal voltage (approx. 5–6 V).

10.4 Thereafter apply to test point TP an unmodulated 500 μV signal. Set the frequency (about 10.7 MHz) so that the DC voltage reading equals the no-signal voltage.

10.5 Adjust coil L402 for maximum reading on receiver's meter.

10.6 Adjust maximum reading to approx. 4 by means of potentiometer P401.

10.7 Repeat item 10.5 if necessary.

11. Tuner

FM tuner alignment points are indicated on the tuner's screen and correspond with those on the diagram. Should a defect develop in the tuner it is recommended to replace it.

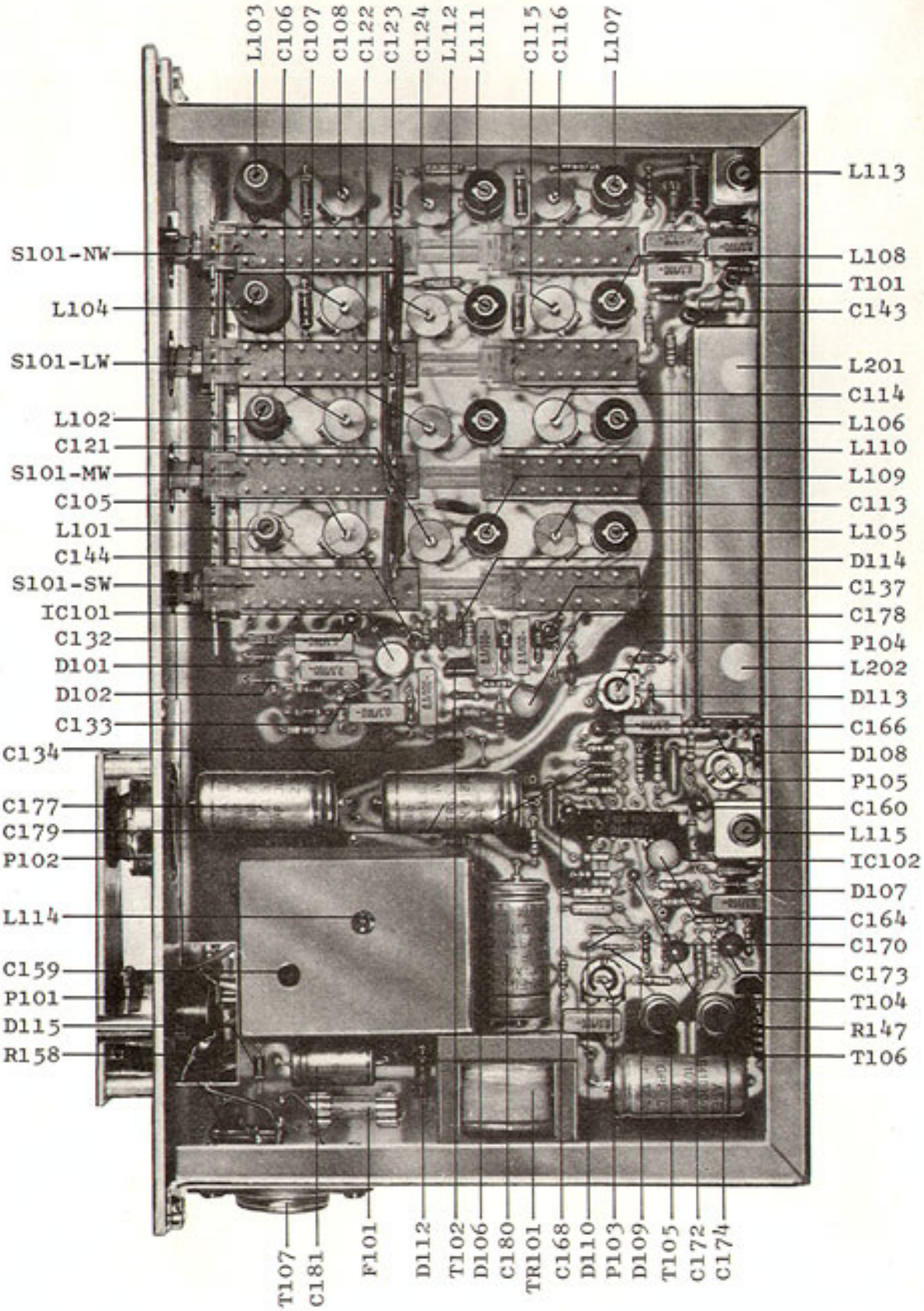

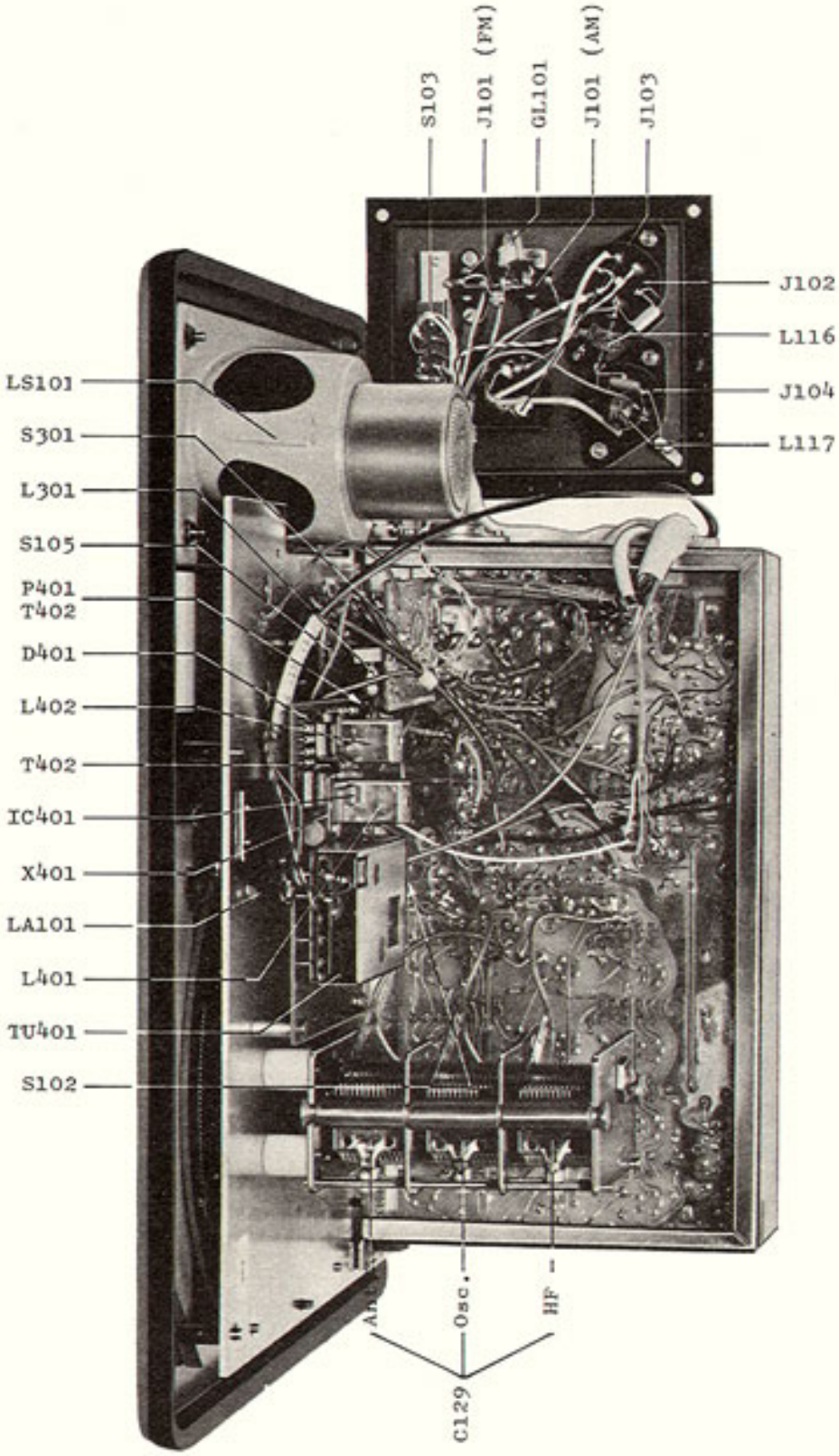

R108/R109

Symbol	Description	Manufact.	
C101	Not used		
C102	Not used		
C103	Capacitor polystyrene 180pF ± 1% 500V	Philips	2222 427 41801
C104	Capacitor polystyrene 180pF ± 1% 500V	Philips	2222 427 41801
C105	Capacitor trimmer 9 - 60 pF	Dau-Teflon	109. 4901. 060
C106	Capacitor trimmer 9 - 60 pF	Dau-Teflon	109. 4901. 060
C107	Capacitor trimmer 9 - 60 pF	Dau-Teflon	109. 4901. 060
C108	Capacitor trimmer 9 - 60 pF	Dau-Teflon	109. 4901. 060
C109	Not used		
C110	Not used		
C111	Capacitor polystyrene 150pF ± 1% 500V	Philips	2222 427 41501
C112	Capacitor polystyrene 150pF ± 1% 500V	Philips	2222 427 41501
C113	Capacitor trimmer 9 - 60 pF	Dau-Teflon	109. 4901. 060
C114	Capacitor trimmer 9 - 60 pF	Dau-Teflon	109. 4901. 060
C115	Capacitor trimmer 9 - 60 pF	Dau-Teflon	109. 4901. 060
C116	Capacitor trimmer 9 - 60 pF	Dau-Teflon	109. 4901. 060
C117	Capacitor ceramic NPO 27 pF ± 10% 400V	Ferroperm	9/0112,9
C118	Not used		
C119	Capacitor polystyrene 470pF ± 1% 250V	Philips	2222 426 44701
C120	Capacitor polystyrene 620pF ± 1% 125V	Philips	2222 425 46201
C121	Capacitor trimmer 6 - 38 pF	Dau-Teflon	109. 3901. 038
C122	Capacitor trimmer 6 - 38 pF	Dau-Teflon	109. 3901. 038
C123	Capacitor trimmer 6 - 38 pF	Dau-Teflon	109. 3901. 038
C124	Capacitor trimmer 6 - 38 pF	Dau-Teflon	109. 3901. 038
C125	Capacitor polystyrene 1800pF ± 1% 125V	Philips	2222 425 41802
C126	Capacitor polystyrene 510pF ± 1% 250V	Philips	2222 426 45101
C127	Capacitor polystyrene 820pF ± 1% 125V	Philips	2222 425 48201
C128	Capacitor polystyrene 620pF ± 1% 125V	Philips	2222 425 46201
C129	Capacitor variable 3 x 532 pF	Jackson	Type E 4507/3/532
C130	Capacitor polyethylene 0,1uF ± 20% 100V	Philips/Ero	2222 344 24104
C131	Capacitor polyethylene 0,1uF ± 20% 100V	Philips/Ero	2222 344 24104
C132	Capacitor tantal 10uF 16V	Ero	ETP-3
C133	Capacitor tantal 10uF 16V	Ero	ETP-3
C134	Capacitor tantal 10uF 16V	Ero	ETP-3
C135	Capacitor polyethylene 0,1uF ± 20% 100V	Philips/Ero	2222 344 24104
C136	Capacitor polyethylene 0,1uF ± 20% 100V	Philips/Ero	2222 344 24104
C137	Capacitor tantal 10uF 16V	Ero	ETP-3
C138	Capacitor polystyrene 4700pF ± 1% 63V	Philips	2222 424 44702
C139	Capacitor polystyrene 4700pF ± 1% 63V	Philips	2222 424 44702
C140	Capacitor polyethylene 0,1uF ± 20% 100V	Philips/Ero	2222 344 24104

R108/R109

Symbol	Description			Manufact.	
C141	Capacitor polyethylene	0,1uF±20%	100V	Philips/Ero	2222 344 24104
C142	Capacitor polyethylene	0,1uF±20%	100V	Philips/Ero	2222 344 24104
C143	Capacitor tantal	10 uF	16V	Ero	ETP - 3
C144	Capacitor tantal	10 uF	16V	Ero	ETP - 3
C145	Capacitor polyethylene	0,1uF±20%	100V	Philips/Ero	2222 344 24104
C146	Capacitor polyethylene	0,1uF±20%	100V	Philips/Ero	2222 344 24104
C147	Capacitor polyethylene	0,1uF±20%	100V	Philips/Ero	2222 344 24104
C148	Capacitor polystyrene	3,3nF±1%	63V	Philips	2222 424 43302
C149	Capacitor tantal	10 uF	16V	Ero	ETP - 3
C150	Capacitor polystyrene	1000pF±1%	125V	Philips	2222 425 41002
C151	Capacitor polystyrene	2200pF±1%	63V	Philips	2222 424 42202
C152	Capacitor polystyrene	100 pF±1%	500V	Philips	2222 427 41001
C153	Capacitor polystyrene	4,7 nF±1%	63V	Philips	2222 424 44702
C154	Capacitor tantal	10 uF	16V	Ero	ETP - 2
C155	Capacitor polystyrene	56 pF ±1%	500V	Philips	2222 427 45609
C156	Capacitor polyester	22 nF±10%	250V	Philips	2222 342 45223
C157	Capacitor polyethylene	0,1uF±20%	100V	Philips/Ero	2222 344 24104
C158	Capacitor polyethylene	0,1uF±20%	100V	Philips/Ero	2222 344 24104
C159	Capacitor trimmer	9 - 60 pF		Dau-Teflon	109. 4901. 060
C160	Capacitor tantal	10 uF	16V	Ero	ETP - 2
C161	Capacitor polystyrene	1000pF±1%	125V	Philips	2222 425 41002
C162	Capacitor polystyrene	1000pF±1%	125V	Philips	2222 425 41002
C163	Capacitor polyethylene	0,1uF±20%	100V	Philips/Ero	2222 344 24104
C164	Capacitor tantal	68uF±10%	16V	Ero	ETQ - 5
C165	Capacitor polyester	22nF ±10%	250V	Philips	2222 342 45223
C166	Capacitor tantal	10 uF	16V	Ero	ETP - 2
C167	Capacitor polyester	22nF ±10%	250V	Philips	2222 342 45223
C168	Capacitor tantal	10 uF	16V	Ero	ETP - 2
C169	Capacitor polystyrene	1500pF±1%	63V	Philips	2222 424 41502
C170	Capacitor tantal	1 uF	35V	Ero	ETP - 1
C171	Capacitor polystyrene	2200pF±1%	63V	Philips	2222 424 42202
C172	Capacitor tantal	33 uF	10V	Ero	ETP - 3
C173	Capacitor tantal	33 uF	10V	Ero	ETP - 3
C174	Capacitor electrolytic	1000uF	16V	Siemens	B41010-A4108-T
C175	Capacitor polystyrene	150pF±1%	500V	Philips	2222 427 41501
C176	Capacitor polyethylene	0,1uF±20%	100V	Philips/Ero	2222 344 24104
C177	Capacitor electrolytic	1000uF	16V	Siemens	B41010-A4108-T
C178	Capacitor tantal	68uF ±10%	16V	Ero	ETQ - 5
C179	Capacitor electrolytic	1000uF	16V	Siemens	B41010-A4108-T
C180	Capacitor electrolytic	1000uF	16V	Siemens	B41010-A4108-T

R108/R109

Symbol	Description			Manufact.	
C181	Capacitor electrolytic	100uF	25V	Siemens	B41283-B5107-T
C182	Capacitor polyester	0,1uF	250V	Arco	Minidip B
C183	Capacitor polyester	0,1uF	250V	Arco	Minidip B
C184	Capacitor polyester	0,1uF	250V	Arco	Minidip B
C185	Capacitor ceramic	33 pF±10%	400V	Ferroperm	9/0116,3
D101	Diode silicium			Ph/Sie/Tex	1N4148/1S921
D102	Diode silicium			Ph/Sie/Tex	1N4148/1S921
D103	Diode germanium			Ph/Sie	AA119
D104	Diode silicium			Ph/Sie/Tex	1N4148/1S921
D105	Diode silicium			Ph/Sie/Tex	1N4148/1S921
D106	Diode silicium			Ph/Sie/Tex	1N4148/1S921
D107	Diode silicium			Ph/Sie/Tex	1N4148/1S921
D108	Diode silicium			Ph/Sie/Tex	1N4148/1S921
D109	Diode silicium			Ph/Sie/Tex	1N4148/1S921
D110	Diode silicium			Ph/Sie/Tex	1N4148/1S921
D111	Not used				
D112	Diode zeener	9,1V	5W	Motorola	1N5346 B
D113	Diode silicium			Ph/Sie/Tex	1N4148/1S921
D114	Diode silicium			Ph/Sie/Tex	1N4148/1S921
D115	Diode silicium			Motorola	1N4002
F101	Fuse 5 x 20mm	1 AMP Slow		Wickmann	1AT
GL101	Neon Bulb			H. Limited	Type 3L
IC101	Integrated circuit			NS/RCA	LM3053/CA3053
IC102	Integrated circuit			Philips	TBA 570 Q
J101	Aerial socket			Bell & Lee	L603/Black
J102	DF socket			Hirschmann	Meb 60
J103	Phone jack	(without switch)		Cliff	Type S1
J104	Power socket			Hirschmann	Mesei 60F
L101	Aerial coil SW	TL 125		S.P.	6-0-20466
L102	Aerial coil MW	TL 126		S.P.	6-0-20467
L103	Aerial coil NW	TL 127		S.P.	6-0-20468
L104	Aerial coil LW	TL 128		S.P.	6-0-20469
L105	RF coil SW	TL 129		S.P.	6-0-20470
L106	RF coil MW	TL 130		S.P.	6-0-20471
L107	RF coil NW	TL 131		S.P.	6-0-20472
L108	RF coil LW	TL 132		S.P.	6-0-20473

R108/R109

Symbol	Description			Manufact.	
L109	Osc. coil SW	TL 133		S.P.	6-0-20474
L110	Osc. coil MW	TL 134		S.P.	6-0-20475
L111	Osc. coil NW	TL 135		S.P.	6-0-20476
L112	Osc. coil LW	TL 136		S.P.	6-0-20477
L113	IF trap coil	TL 137		S.P.	6-0-20478
L114	Beat osc. coil	TL 138		S.P.	6-0-20479
L115	IF coil	TL 139		S.P.	6-0-20480
L116	Filter coil			S.P.	TL 079
L117	Filter coil			S.P.	TL 079
LA101	Dial lamp 12V			Philips	80030
LS101	Speaker 8 ohm			Videbæk	21/8 TV-LG
M101	Meter 100 uA			Bertram	Type 689-100uA
P101	Potentiometer log	50 K ohm W/switch		Piher	21E 6 s/i
P102	Potentiometer	10 K ohm lin		Piher	21E 6 s/i
P103	Potentiometer trimme	100 ohm		Ph/Ruwido	2322 410 03301
P104	Potentiometer trimme	470 ohm		Ph/Ruwido	2322 410 03303
P105	Potentiometer trimme	10 K ohm		Ph/Ruwido	2322 410 03307
R101	Resistor	9,1K ohm	0,33W	Philips	2322 101 33912
R102	Resistor	15 K ohm	0,33W	Philips	2322 101 33153
R103	Resistor	470 ohm	0,33W	Philips	2322 101 33471
R104	Resistor	10 K ohm	0,33W	Philips	2322 101 33103
R105	Resistor	470 ohm	0,33W	Philips	2322 101 33471
R106	Resistor	470 ohm	0,33W	Philips	2322 101 33471
R107	Resistor	4,7K ohm	0,33W	Philips	2322 101 33473
R108	Resistor	39 ohm	0,33W	Philips	2322 101 33399
R109	Resistor	680 ohm	0,33W	Philips	2322 101 33681
R110	Resistor	100 ohm	0,33W	Philips	2322 101 33101
R111	Resistor	27 K ohm	0,33W	Philips	2322 101 33273
R112	Resistor	3,3K ohm	0,33W	Philips	2322 101 33332
R113	Resistor	18 K ohm	0,33W	Philips	2322 101 33183
R114	Resistor	15 K ohm	0,33W	Philips	2322 101 33153
R115	Resistor	680 ohm	0,33W	Philips	2322 101 33681
R116	Resistor	10 ohm	0,33W	Philips	2322 101 33109
R117	Resistor	2,2K ohm	0,33W	Philips	2322 101 33222
R118	Resistor	120 ohm	0,33W	Philips	2322 101 33121
R119	Resistor	680 ohm	0,33W	Philips	2322 101 33681
R120	Resistor	1,2K ohm	0,33W	Philips	2322 101 33122

R108/R109

Symbol	Description				Manufact.	
R121	Resistor		5,6K ohm	0,33W	Philips	2322 101 33562
R122	Resistor		680 ohm	0,33W	Philips	2322 101 33681
R123	Resistor		5,6K ohm	0,33W	Philips	2322 101 33562
R124	Resistor		560 ohm	0,33W	Philips	2322 101 33561
R125	Resistor		4,7K ohm	0,33W	Philips	2322 101 33472
R126	Resistor		2,7K ohm	0,33W	Philips	2322 101 33272
R127	Resistor		100 ohm	0,33W	Philips	2322 101 33101
R128	Resistor		22 K ohm	0,33W	Philips	2322 101 33223
R129	Resistor		4,7K ohm	0,33W	Philips	2322 101 33472
R130	Resistor		2,2K ohm	0,33W	Philips	2322 101 33222
R131	Resistor		100K ohm	0,33W	Philips	2322 101 33104
R132	Resistor		5,6K ohm	0,33W	Philips	2322 101 33562
R133	Resistor		3,3K ohm	0,33W	Philips	2322 101 33332
R134	Resistor		22 K ohm	0,33W	Philips	2322 101 33223
R135	Resistor		15 K ohm	0,33W	Philips	2322 101 33153
R136	Resistor		680 ohm	0,33W	Philips	2322 101 33681
R137	Resistor		1,5K ohm	0,33W	Philips	2322 101 33152
R138	Resistor		2,2K ohm	0,33W	Philips	2322 101 33222
R139	Resistor		2,7K ohm	0,33W	Philips	2322 101 33272
R140	Resistor		68 K ohm	0,33W	Philips	2322 101 33683
R141	Resistor		100K ohm	0,33W	Philips	2322 101 33104
R142	Resistor		390 ohm	0,33W	Philips	2322 101 33391
R143	Resistor		10 ohm	0,33W	Philips	2322 101 33109
R144	Resistor		33 K ohm	0,33W	Philips	2322 101 33333
R145	Resistor		390 ohm	0,33W	Philips	2322 101 33391
R146	Resistor		330 ohm	0,33W	Philips	2322 101 33331
R147	Resistor		0,68 ohm±10%	0,7W	Resista	RN 3
R148	Resistor		5,6K ohm	0,33W	Philips	2322 101 33562
R149	Resistor		3,3K ohm	0,33W	Philips	2322 101 33332
R150	Resistor		330 ohm	0,33W	Philips	2322 101 33331
R151	Resistor		15 ohm	0,33W	Philips	2322 101 33159
R152	Resistor		4,7K ohm	0,33W	Philips	2322 101 33472
R153	Resistor		820 ohm	0,33W	Philips	2322 101 33821
R154	Resistor		270 ohm	0,33W	Philips	2322 101 33271
R155	Resistor		100 ohm	0,33W	Philips	2322 101 33101
R156	Resistor		100K ohm	0,33W	Philips	2322 101 33104
R157	Resistor	R108 ONLY	47 ohm	0,33W	Philips	2322 101 33479
R158	Resistor		180 ohm	4,2W	Philips	2322 330 22181
R159	Resistor		33 ohm	0,33W	Philips	2322 101 33339
R160	Resistor		10 ohm	0,33W	Philips	2322 101 33109
R161	Resistor		3,3K ohm	0,33W	Philips	2322 101 33332

R108/R109

Symbol	Description	Manufact.	
R162	Resistor 1,2K ohm 0,33W	Philips	2322 101 33122
X101	Ceramic resonator f_S = 452 kHz ± 1 kHz	CRL	FP 2 S 26
S101	Band switch	Petrick	70624/I
S102	Function switch	MEC	7-3-20352
S103	Battery and Test switch	Promimet	4032 N
S104	Power switch (part of P101)		
S105	Light switch R108 ONLY Light switch R109 ONLY	MEC C & K	7-3-20566A INC 8532/A 7760
S106	Range switch R109 ONLY	MEC	7-3-20758
T101	Transistor	Phil/Tex	BF 199, BF 597
T102	Transistor	Sie/Phil	BC 147A
T103	Transistor	Sie/Phil	BC 147A
T104	Transistor	Sie/Phil	BC 147A
T105	Transistor	Sie/Telef	BC 140
T106	Transistor	Sie/Telef	BC 160
T107	Transistor	Motorola	2N 3055
TR101	Output transformer	Tradania	TD 2344

R108/R109

Symbol	Description			Manufact.	
C201	Capacitor polystyrene	560pF ± 1%	125V	Philips	2222 425 45601
C202	Capacitor polystyrene	180pF ± 1%	500V	Philips	2222 427 41801
C203	Capacitor polystyrene	330pF ± 1%	250V	Philips	2222 426 43301
C204	Capacitor polystyrene	360pF ± 1%	250V	Philips	2222 426 43601
C205	Capacitor polystyrene	68pF ± 1%	500V	Philips	2222 427 46809
C206	Capacitor polystyrene	270pF ± 1%	500V	Philips	2222 427 42701
C207	Capacitor polystyrene	270pF ± 1%	500V	Philips	2222 427 42701
C208	Capacitor polystyrene	270pF ± 1%	500V	Philips	2222 427 42701
C209	Capacitor polystyrene	560pF ± 1%	125V	Philips	2222 425 45601
L201	IF filter coil	TL 140		S.P.	6-0-20481
L202	IF filter coil	TL 140		S.P.	6-0-20481
R201	Resistor	10 K ohm	0,33W	Philips	2322 101 33103
R202	Resistor	27 K ohm	0,33W	Philips	2322 101 33273
X201	Ceramic resonator	452 KHz ± 1 KHz		CRL	FP 2 S 26
X202	Ceramic resonator	452 KHz ± 1 KHz		CRL	FP 2 S 26
X203	Ceramic resonator	452 KHz ± 1 KHz		CRL	FP 2 S 26
X204	Ceramic resonator	452 KHz ± 1 KHz		CRL	FP 2 S 26

A

R108/R109

Symbol	Description	Manufact.	
C301	Capacitor polyethylene 0,15uF ± 20% 100V	Phil/Ero	2222 344 24154
C302	Capacitor polyester 10nF ± 10% 250V	Philips	2222 342 45103
C303	Capacitor polystyrene 2,2nF ± 1% 63V	Philips	2222 424 42202
C304	Capacitor tantal 1uF 35V	Ero	ETP - 1
D301	Diode silicium	Ph/Sie/Tex	1N4148/1S921
L301	AF filter coil TL 141	S.P.	6-0-20482
R301	Not used		
R302	Resistor 47 K ohm 0,33W	Philips	2322 101 33473
R303	Resistor 39 K ohm 0,33W	Philips	2322 101 33393
R304	Resistor 2,7 K ohm 0,33W	Philips	2322 101 33272
S301	Tone switch	MEC/Lorlin	7-3-20351B

R109

Symbol	Description			Manufact.	
C401	Capacitor ceramic 1,8nF -20/+80%		400V	Ferroperm	9/0141,9
C402	Capacitor ceramic 1,8nF -20/+80%		400V	Ferroperm	9/0141,9
C403	Capacitor polyester 22 nF ± 10%		250V	Philips	2222 342 45223
C404	Capacitor polyester 10 nF ± 10%		250V	Philips	2222 342 45103
C405	Capacitor polyester 10 nF ± 10%		250V	Philips	2222 342 45103
C406	Capacitor polystyrene 470pF ± 5%		25V	Suf./Mial	HS7/A Type 610,1
C407	Capacitor polyester 22 nF ± 10%		250V	Philips	2222 342 45223
C408	Capacitor ceramic 56 pF ± 5%		400V	Ferroperm	9/0122,9
C409	Capacitor polystyrene 100pF ± 5%		25V	Sie./Mial	B31111-A3101-J Type 610.1
C410	Capacitor polyester 10 nF ± 10%		250V	Philips	2222 342 45103
C411	Capacitor polyester 10 nF ± 10%		250V	Philips	2222 342 45103
C412	Capacitor ceramic 10nF -20/+80%		30V	Ferroperm	9/0145,9
C413	Capacitor polyester 10 nF ± 10%		250V	Philips	2222 342 45103
C414	Capacitor polyester 10 nF ± 10%		250V	Philips	2222 342 45103
C415	Capacitor ceramic 10nF -20/+80%		30V	Ferroperm	9/0145,9
C416	Capacitor polyester 10 nF ± 10%		250V	Philips	2222 342 45103
C417	Capacitor polyester 10 nF ± 10%		250V	Philips	2222 342 45103
C418	Capacitor ceramic 10 pF ± 5%		400V	Ferroperm	9/0112,9
CH401	Drossel coil 10 uH KGRD 5x10/R10			K.K. & B.	Dualoric
CH402	Drossel -3pc. ferroxcube beads			Philips	4322 020 34400
D401	Diode zener	5,1V	1W	Motorola	1N4733A
D402	Diode germanium			Ph./Sie.	AA119
D403	Diode silicium			Ph/Sie/Tex	1N4148/1S921
IC401	Integrated circuit			Siemens	TBA 120S
L401	Detector coil	TL149		S.P.	6-0-20784
L402	Indicator coil	TL150		S.P.	6-0-20785
P401	Potentiometer trimme 220 ohm			Ph/Ruwido	2322 410 03302 0052-600

A

R109

Symbol	Description			Manufact.	
R401	Resistor	470 ohm	0,33W	Philips	2322 101 33471
R402	Resistor	1 K ohm	0,33W	Philips	2322 101 33102
R403	Resistor	560 ohm	0,33W	Philips	2322 101 33561
R404	Resistor	6,8K ohm	0,33W	Philips	2322 101 33682
R405	Resistor	2,2K ohm	0,33W	Philips	2322 101 33222
R406	Resistor	100 ohm	0,33W	Philips	2322 101 33101
R407	Resistor	470 ohm	0,33W	Philips	2322 101 33471
R408	Resistor	47 ohm	0,33W	Philips	2322 101 33479
R409	Resistor	470 ohm	0,33W	Philips	2322 101 33471
R410	Resistor	220 ohm	0,33W	Philips	2322 101 33221
R411	Resistor	1 K ohm	0,33W	Philips	2322 101 33102
R412	Resistor	3,9K ohm	0,33W	Philips	2322 101 33392
R413	Resistor	33 ohm	0,33W	Philips	2322 101 33339
R414	Resistor	680 ohm	0,33W	Philips	2322 101 33681
R415	Resistor	100 ohm	0,33W	Philips	2322 101 33101
T401	Transistor			Tex/Phil	BF597/BF199
T402	Transistor			Sie/Phil	BC 157A
X401	Ceramic filter	10,7 MHz		TAIYO	CFM-107K-14
TU401	FM Tuner	88 - 108 MHz		MITSUMI	FC-A35

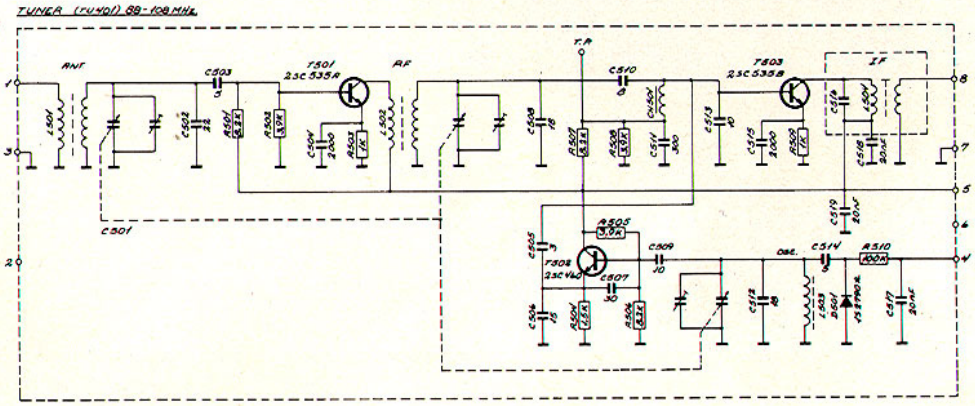

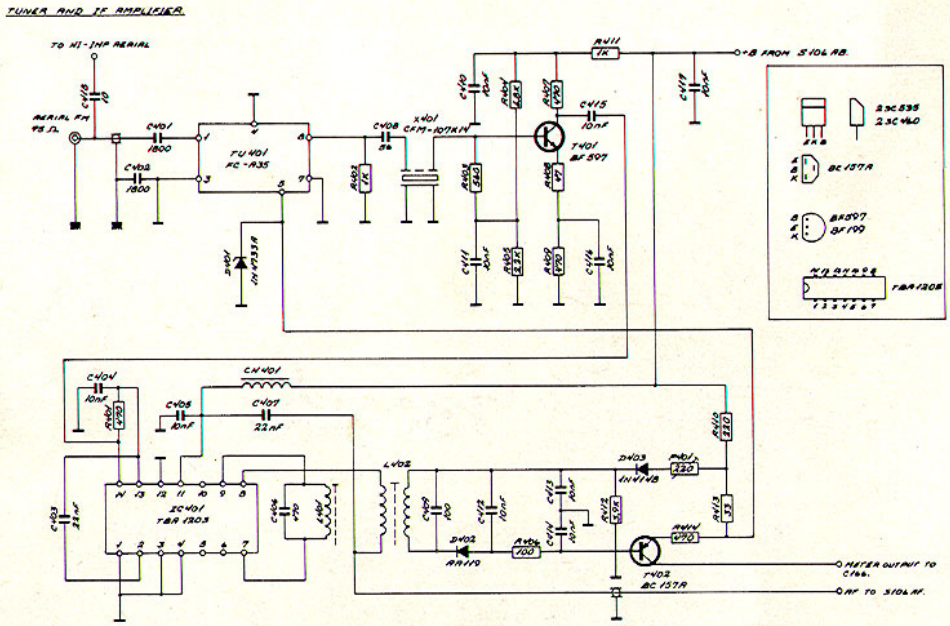

← R108/R109 Main Schematic

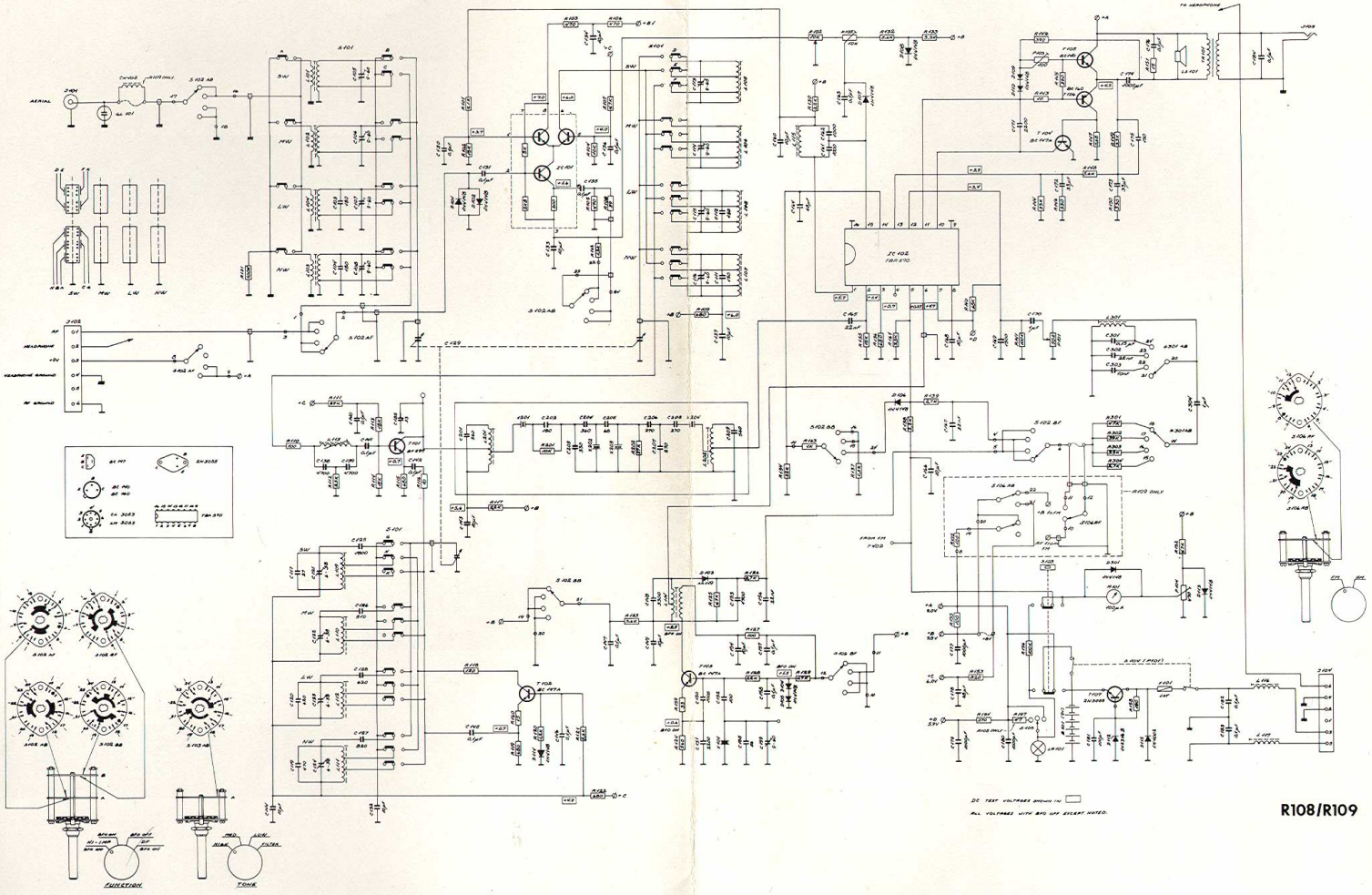

R108/R109

R109 FM Schematic →