TBC-6

DIGITAL TIME-BASE CORRECTOR

INSTALLATION AND OPERATION

ISSUED: AUGUST 1984

1809643-01

AMPEX

Catalog No. 1809643-01
Issued: September 1984

TBC-6

DIGITAL TIME-BASE CORRECTOR

INSTALLATION AND OPERATION

AMPEX

Prepared by

AVSD Technical Publications
Ampex Corporation
401 Broadway
Redwood City, CA 94063

Catalog No. 1809643-01
Issued: September 1984

FOR ADDITIONAL TECHNICAL INFORMATION

FIELD ENGINEERING BULLETIN SERVICE

The Ampex Audio-Video Systems Division's Technical Support Group publishes Field Engineering Bulletins (FEBs) describing approved equipment modifications, special tools and accessories plus information on improved operating and maintenance techniques.

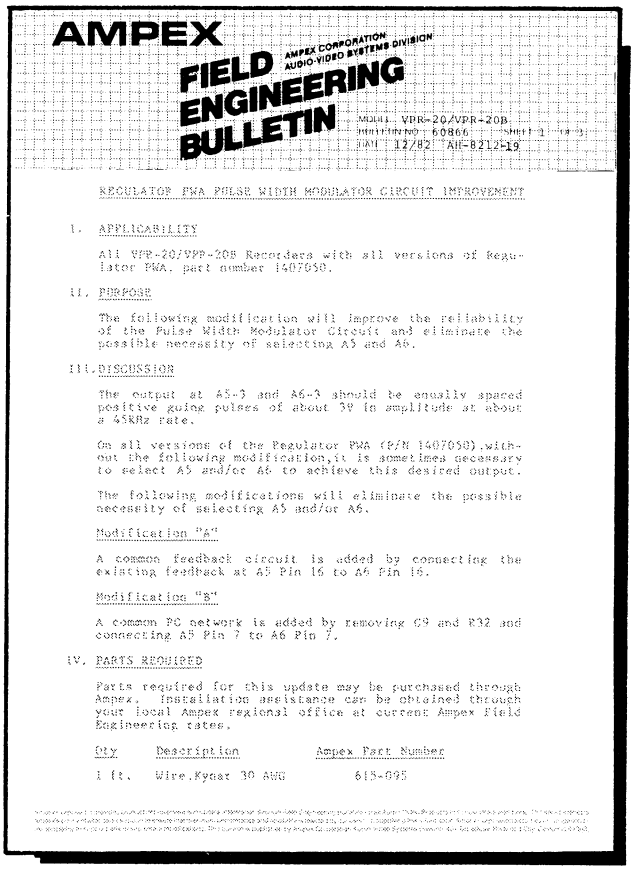

AMPEX

AMPEX CORPORATION AUDIO-VIDEO SYSTEMS DIVISION

FIELD ENGINEERING BULLETIN

MODEL: VPR-20/VPR-20B
BULLETIN NO: 60866 SHEET 1 OF 3
DATE: 12/82 AE-8212-19

REGULATOR PWA PULSE WIDTH MODULATOR CIRCUIT IMPROVEMENT

I. APPLICABILITY

All VPR-20/VPR-20B Recorders with all versions of Regulator PWA, part number 1407658.

II. PURPOSE

The following modification will improve the reliability of the Pulse Width Modulator Circuit and eliminate the possible necessity of selecting A5 and A6.

III. DISCUSSION

The output at A5-3 and A6-3 should be equally spaced positive going pulses of about 3V in amplitude at about a 45KHz rate.

On all versions of the Regulator PWA (P/N 1407658), without the following modification, it is sometimes necessary to select A5 and/or A6 to achieve this desired output.

The following modifications will eliminate the possible necessity of selecting A5 and/or A6.

Modification "A"

A common feedback circuit is added by connecting the existing feedback at A5 Pin 16 to A6 Pin 16.

Modification "B"

A common PC network is added by removing C9 and R32 and connecting A5 Pin 7 to A6 Pin 7.

IV. PARTS REQUIRED

Parts required for this update may be purchased through Ampex. Installation assistance can be obtained through your local Ampex regional office at current Ampex Field Engineering rates.

Qty	Description	Ampex Part Number
1 ft.	Wire,Kynar 30 AWG	615-095

To receive these bulletins, send us the following information:

Owner's Name
Owner's Address

Model No.
Serial No.
Date of Purchase

Dealer's Name
Dealer's Address

In the United States send to:

AMPEX CORPORATION
Audio-Video Systems Division
Technical Support Group
401 Broadway, Mail Stop 3-46
Redwood City, California 94063

Outside United States send to:

YOUR NEAREST SALES COMPANY

(Addresses on rear of this page)

TRAINING SERVICES

Technical (maintenance) training on this and other Ampex video, audio, disc and instrumentation products is offered on a scheduled basis at Corporate Headquarters in Redwood City, California, and at Headquarters European Area in Reading, England. For further information regarding this training, please contact your local Ampex Sales Office.

SALES OFFICES

U.S. SALES OFFICES

CALIFORNIA
10435 N. Tantau Avenue
Cupertino, CA 95014
(408) 255-4800

500 Rodier Drive
Glendale, CA 91201
(213) 240-5000

GEORGIA
3135 Chestnut Drive, Suite 101
Atlanta, GA 30340
(404) 451-7112

ILLINOIS
719 W. Algonquin Road
Arlington Heights, IL 60005
(312) 593-6000

KENTUCKY
7509 Stonebrook Drive
Louisville, KY 40291
(502) 239-6111

MARYLAND
10215 Fernwood Road
Bethesda, MD 20817
(301) 530-8800

NEW JERSEY
5 Pearl Court
Allendale, NJ 07401
(201) 825-9600

OHIO
4130 Linden Avenue
Dayton, OH 45432
(513) 254-6101

TEXAS
3353 Earhart Drive
Carrollton, TX 75006
(214) 960-1162

6430 Hillcroft, Suite 118
Houston, TX 77081
(713) 774-8714

UTAH
2880 South Main, Suite 111
Salt Lake City, UT 84115
(801) 487-8181

AMPEX CORPORATION
AUDIO-VIDEO SYSTEMS DIVISION
401 BROADWAY
REDWOOD CITY, CALIFORNIA 94063
(415) 367-2011

Effective: 15 February 1983

INTERNATIONAL SALES OFFICES

ARGENTINA
Electronica Ampex S.A.C. I.
Casilla de Correo 5403
1000 Buenos Aires
Republica Argentina

Ave. Cordoba 1184-7th Floor
1055 Buenos Aires
Republica Argentina

AUSTRALIA
Ampex Australia Pty. Ltd.
P.O. Box 199
North Ryde, NSW, 2113
Australia

65 Waterloo Road
North Ryde, NSW, 2113
Australia

21 Terra-Cotta Drive
Blackburn, Victoria, 3130
Australia

BAHRAIN
Ampex World Operations
Abu Fateh Building, µ499
Road 1706, Diplomatic Area
P.O. Box 26627, State of Bahrain.

BELGIUM
Ampex S.A.
Rue de l'Industrie, 8
B-1400 Nivelles, Belgium

BRAZIL
Ampex do Brasil Electronica Ltda.
Rua Visconde de Piraja 595, Grupo 1102
Ipanema - 22410
Rio de Janeiro, Brazil

CANADA
Ampex Canada Inc.
132 East Drive
Bramalea, Ontario
L6T 3T9 Canada

1116-55 Avenue N.E.
Calgary, Alberta
T2E 6Y4 Canada

729 Meloche Street
Dorval, Quebec
H9P 2S4 Canada

COLOMBIA
Ampex de Colonbia S.A.
Apartado Aereo 29613
Bogota, Colombia

Carrera 19 Nr. 80-17
Bogota, Colombia

ENGLAND
Ampex International
Acre Road, Reading
Berkshire, RG2 OQR, England

Ampex Great Britain Ltd.
Acre Road, Reading
Berkshire, RG2 OQR, England

AWOSA Middle East HQ
Acre Road, Reading
Berkshire, RG2 OQR, England

FRANCE
Ampex S.A.R.L.
Courcellor I, 2 Rue Curnonsky
75017 Paris, France

GERMANY
Ampex Europa GmbH
Walter-Kolb-Str. 9-11
6000 Frankfurt (Main) 70
West Germany

HONG KONG
Ampex World Operations S.A.
Rooms 908-911, 9th Floor
TSIM SHA TSUI Center (East Wing)
66 Mody Road
Kowloon, Hong Kong, B.C.C.

HONG KONG (Continued)
Ampex Ferrotec Ltd.
603 Tai Nan West Street
6/F and 7/F
Kowloon, Hong Kong

ITALY
Ampex Italiana S.p.A.
Casella Postale 10720
Rome-EUR, Italy

Via Riccardo Gigante 4
00143 Rome, Italy

Via Oristoforo Colombo, 49
20090 Trezzano Sul Naviglio
Milano, Italy.

JAPAN
Ampex Japan Ltd.
New Belle Mode Building
3 Kojimachi, 3-Chome
Chiyoda-Ku
Tokyo 102, Japan

P.O. Box 15
Tokyo Ryutsu Center Post Office
6-1-1 Heiwajima, Ota-ku
Tokyo 143, Japan

Konishiroku-Ampex Co., Ltd.
Shinjuku Nomura Bldg.
26-2 Nishishinjuku 1-Chome
Shinjuku Tokyo 160, Japan

MEXICO
Ampex de Mexico S.A. de C.V.
Apartado Postal No. 13-615
Col. Portales, Mexico 13, D.F.

Division del Norte No. 1832
Col. Portales, Mexico 13, D.F.

Aurex S.A. de Cv
Apartado Postal 83-60
Tiahuac, Mexico 23, D.F.

Calzada Tulyehuaico 3370
Mexico 23, D.F.

NETHERLANDS
Ampex B.V.
P.O. Box 9026
3506 GA Utrecht, Netherlands

Zamenhofdreef 65A
3562 JV Utrecht, Netherlands

SINGAGPORE
Ampex International Sales Corp.
1601-1602 Tong Eng Bldg.
101 Cecil Street
Singapore 0106, Republic of Singapore

SPAIN
Ampex Trading Co. SA
Sucursal En Espana
Calle Piquer 7
Madrid 33, Spain

SWEDEN
Ampex AB
P.O. Box 7056 (Rissneleden)
S-172 07 Sundbyberg, Sweden

SWITZERLAND
Ampex World Operations SA
Rte des Arsenaux 9
1700 Fribourg, Switzerland

TAIWAN
Ampex Taiwan Ltd.
Taoyuan P.O. Box 188
Taiwan, Republic of China

46 Hsing Pan Road, Ta Lin Li
Taoyuan, Taiwan, Republic of China

VENEZUELA
Ampex Pan American Co.
Apartado 76.825
Caracas 107, Venezuela

SAFETY AND FIRST AID SUGGESTIONS

Regardless of how well electrical equipment is designed, personnel can be exposed to **dangerous electrical shock** when protective covers are removed for maintenance or other activities. Therefore, it is incumbent on the user to see that all safety regulations are consistently observed and that each individual assigned to the equipment has a clear understanding of first aid related to electrical hazards.

In addition, the following safety practices must be followed:

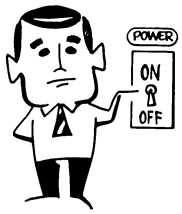

1 Do not attempt to adjust unprotected circuit controls or to dress leads with power **on**.

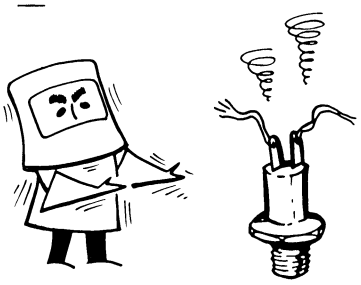

2 Do not touch heavily loaded or overheated components without precaution to avoid burns.

3 Do not assume that all danger of electrical shock is removed when power is **off**. Charged capacitors can retain dangerous voltages for a long time after power is removed. These capacitors should be discharged through a suitable resistor before any circuit points are touched.

4 Always avoid placing parts of the body in series between ground and circuit points.

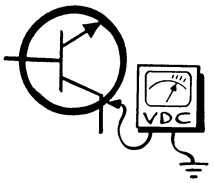

5 Remember that some semiconductor cases and solid-state circuits carry high voltages.

6 Don't take chances. Be fully trained. Ampex equipment should be operated and maintained by fully qualified personnel.

If someone seems unable to free himself while receiving an electrical shock, **turn power off** before attempting to render aid. A muscular spasm or unconsciousness can make a victim unable to free himself from the electrical power.

WARNING

DO NOT TOUCH VICTIM OR HIS CLOTHING BEFORE POWER IS REMOVED OR YOU MAY ALSO BECOME A SHOCK VICTIM.

If power cannot be removed immediately, **very carefully** loop a length of dry nonconducting material (such as rope, insulating material, or clothing) around the victim and pull him free of the power. Carefully avoid touching him or his clothing until free of power. Immediately start the appropriate first aid procedures.

GOOD PRACTICES

In maintaining the equipment covered in this manual, please keep in mind the following standard good practices:

1. When connecting any instrument (oscilloscope, waveform monitor, etc.) to a high-frequency output, use the appropriate termination resistor at the input of the instrument, unless the instrument is terminated internally.

2. When inserting or removing printed wiring assemblies (PWAs), cable connectors, or fuses, always turn off power to the affected portion of the equipment. After power is removed, allow sufficient time for the power supplies to bleed down before reinserting PWAs.

3. When troubleshooting, remember that FETs and other metal-oxide-semiconductor (MOS) devices may appear defective because of leakage between traces or component leads on the printed wiring board. Clean the printed wiring board and recheck the MOS device before assuming it is defective.

4. When replacing MOS devices, follow standard practices to avoid damage caused by static charges and soldering.

5. When removing components from PWAs (particularly ICs), use care to avoid damaging PWA traces.

WARNING

This equipment generates, uses, and can radiate radio frequency energy and, if not installed and used in accordance with the instruction manual, may cause interference to radio communications. It has been tested and found to comply with the limits for a Class A computing device pursuant to Subpart J of Part 15 of FCC rules, which are designed to provide reasonable protection against such interference when operated in a commercial environment. Operation of this equipment in a residential area is likely to cause interference, in which case, the user, at his own expense, will be required to take whatever measures may be necessary to correct the interference.

TABLE OF CONTENTS

TABLE OF CONTENTS
(Continued)

LIST OF ILLUSTRATIONS

LIST OF TABLES

TBC-6 Time-Base Corrector with VPR-6 Video Production Recorder

SECTION 1
GENERAL INFORMATION

1-1 PURPOSE AND SCOPE

This manual contains general information, as well as installation and operating procedures pertaining to the TBC-6 Time-Base Corrector, Ampex Part No. 1451605. Both the NTSC and the PAL versions are described.

- Section 1, *General Information*, is an introduction to the TBC-6, its features and performance specifications.
- Section 2, *Installation*, provides information on signal interface connections, power requirements, initial setup and rack mounting.
- Section 3, *Operation*, describes the purpose and function of all controls and indicators pertaining to normal use.

1-2 Related Publications

This manual is intended as a reference guide for use when operating the TBC-6. For details covering maintenance and repair for both NTSC and PAL, refer to the *TBC-6 Service Manual*, Ampex Catalog No. 1809639 and the *TBC-6 Parts List and Schematics* manual, Ampex Catalog No. 1809647.

1-3 Applicable Standards

NTSC 525/60
PAL 625/50

1-4 GENERAL DESCRIPTION

The TBC-6 is a state-of-the-art, digital time-base corrector designed for use with high-performance, broadcast quality video tape recorders. It is compatible with all standard features specified in SMPTE Type-C and EBU Format-C standards for 1-in. helical scan video tape recordings. It is also compatible with conventional 3/4-in. and 1/2-in. recorder outputs.

The TBC-6 is furnished in either an NTSC 525/60 version or a PAL 625/50 version.

1-5 Features

Some of the more notable capabilities of the TBC-6 are as follows:

- Broadcast-stable, transition-free slow motion playback from full reverse up to 3x forward play speed.
- Viewable monochrome pictures in forward or reverse shuttle at speeds approaching 450 ips or more.

- 4Fsc A/D sampling with 8-bit resolution for transparent conversion to digital processing.
- Built-in compensation for line-by-line velocity error and dropout in full color.
- 32-line memory storage.
- Correction window is 28 horizontal lines wide, to cover coarse time-base (ENG portable) recording errors.
- Playback correction can be time-shared between Ampex Type C recorders and heterodyne recorders when "dubbing up", by switching between VTR video in A and B.

1-6 Typical Applications

The TBC-6 is a compact, economical, high-performance time-base corrector for use with most color television VTRs, including 1-in. helical scan, 3/4-in. and 1/2-in. units. The TBC-6 is an ideal companion to the Ampex VPR-6 video production recorder, and can be connected directly to this instrument using the VTR interconnect cable provided.

1-7 Specifications

Performance characteristics and requirements for both NTSC 525/60 and PAL 625/50 versions are listed in Table 1-1. These specifications are subject to change without notice or obligation.

Table 1-1. TBC-6 Specifications

	NTSC 525/60	PAL 625/50
Video Signal Performance		
Bandwidth (±0.2 dB)	Flat to 4.2 MHz	Flat to 5.5 MHz
Signal-to-Noise Ratio (1)	56 dB	56 dB
Differential Gain (2)	2%	3%
Differential Phase (2)	2°	3°
Transient Response	1% K Factor	1% K Factor
Digital Time Base Performance		
A/D Sampling Frequency	14.3 MHz (4Fsc)	17.7 MHz (4 Fsc)
Quantizing Levels	256 (8 bits)	256 (8 bits)

(1) Based on a VTR S/N of 47 dB.
(2) Based on nonsynchronous subcarrier-modulated ramp with subcarrier amplitude equal to color burst amplitude.

(Continued next page)

Table 1-1. TBC-6 Specifications (Continued)

	NTSC 525/60	PAL 625/50
Digital Time Base Performance (Continued)		
Correction Window	28 horizontal lines	28 horizontal lines
Digital Memory Size	32 horizontal lines	32 horizontal lines
Residual Out Error (1)	±10 ns monochrome ±2.5 ns color	±20 ns monochrome ±3 ns color
NTSC 525/60 and PAL 625/50		
Input/Output Signals		
Video In A and B	1V ±2 dB composite video (75Ω).	
Reference Video	1V ±2 dB composite (loop or 75Ω).	
Dropout Compensator	RF or TTL dropout pulse (dropout = low).	
Video Out 1 and 2	1V composite or noncomposite (75Ω)	
Monitor Video Out	1V composite (75Ω).	
Advance Reference Out	.3V color black or 4V TTL or 4V vertical drive (75Ω).	
Sync Coherent Subcarrier Out	1V subcarrier (75Ω).	
Physical Characteristics		
Height:	5.25 in. (133 mm)	
Width:	19.7 in. (500 mm)	
Depth:	21.625 in. (549 mm)	
Weight:	40 lbs. (18 kg)	
Temperature:	0-45° C	
Humidity:	10-90% RH (non-condensing)	
Input Power		
	90-132 or 180-264 Vac 50-60 Hz, 150W single phase	

1-8 PHYSICAL DESCRIPTION

The TBC-6 is a standalone unit packaged in a table-top cabinet and can be optionally fitted with slides for rack-mounting (see paragraph 2-8). Four printed wiring assemblies (PWAs) plug into a Motherboard PWA, which also distributes dc voltages furnished by a self-contained power supply.

Table 1-2 lists the individual PWAs and their Ampex part numbers for both the NTSC version and the PAL version. The Motherboard PWA also provides the mounting surface for the signal interface connectors, which are pictured and described in Tables 2-2 and 2-3.

Table 1-2. TBC-6 Printed Wiring Assemblies

PWA Name	NTSC Kit No. 1451745	PAL Kit No. 1451746
Video Input	1451640	1451652
Tape Clock	1451643	1451655
Memory	1451747	1451750
Video Output	1451649	1451753
Note: All 7-digit numbers are Ampex part numbers.		

1-9 FUNCTIONAL DESCRIPTION

The TBC-6 Time-Base Corrector functions as a sophisticated digital memory with analog (video) inputs and outputs to compensate for errors in off-tape signal timing. The functional circuits are illustrated in simplified block diagram form in Figure 1-1.

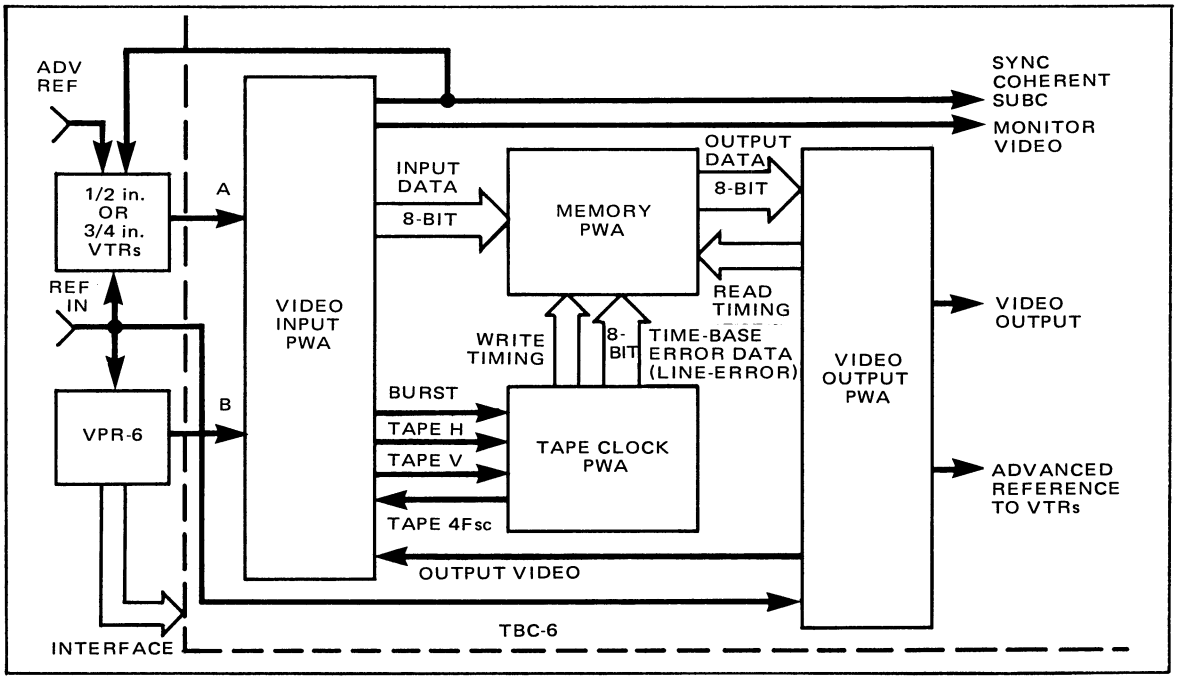

Figure 1-1. TBC-6 System Block Diagram

Composite video off-tape is applied to the Video Input PWA. There it is sampled at four times subcarrier frequency (4Fsc) and A/D converted to 8-bit numbers. The Video Input PWA also strips burst and sync (H and V) from the composite input and applies them to the Tape Clock PWA.

The Tape Clock PWA controls the 4Fsc sampling as well as the write timing to the Memory PWA. The time-base error data is also measured here and furnished to the Memory PWA.

In addition to the 8-bit time-base error data, the Memory PWA receives 8-bit video data from the Video Input PWA. This data is written into memory synchronous with write timing (derived from off-tape), but is read out of memory synchronous with read timing which is furnished by the Video Output PWA. Line-by-line velocity compensation is also provided in the Memory PWA.

The Video Output PWA synchronizes memory read timing with the reference video input. The 8-bit data read from memory is applied to the Video Output PWA which converts it back to video which has been time-base corrected.

SECTION 2
INSTALLATION

2-1 INTRODUCTION

This section provides the user with information needed to install the TBC-6 and connect it to the VTRs, monitors, or other instruments involved in the application. Information for both table-top and rack mounting is covered, including procedures for attaching slides. Interconnection for either helical scan or heterodyne VTRs (or both) is also described.

2-2 UNPACKING

The TBC-6 is shipped from the factory in an industry-standard, corrugated cardboard shipping carton. Exercise caution in unpacking to prevent damage to the cabinet finish or accessory parts. Check the contents of the packing case and packing materials for accessory items. Check all items against the packing list to ensure the shipment is complete. Carefully examine the contents for damage that may have occurred during shipment. Notify the carrier and the Ampex representative of any shortage or damage.

2-3 INSTALLATION CONSIDERATIONS

The following paragraphs describe location and other equipment requirements for installation of the TBC-6.

2-4 Location

The TBC-6 should be located in a well-ventilated, dust-free environment. The area should not be close to any strong electromagnetic fields. The unit should be installed in a relatively vibration-free environment. Figure 2-1 shows physical dimensions for use in estimating clearances to be allowed for air flow, signal connection, etc.

If the TBC-6 is mounted in a rack with other equipment, be sure that warm air discharged from other units is not drawn into the two fan intakes on right side of unit.

2-5 Tools and Test Equipment

Table 2-1 is a list of recommended tools and test equipment for installation of the TBC-6.

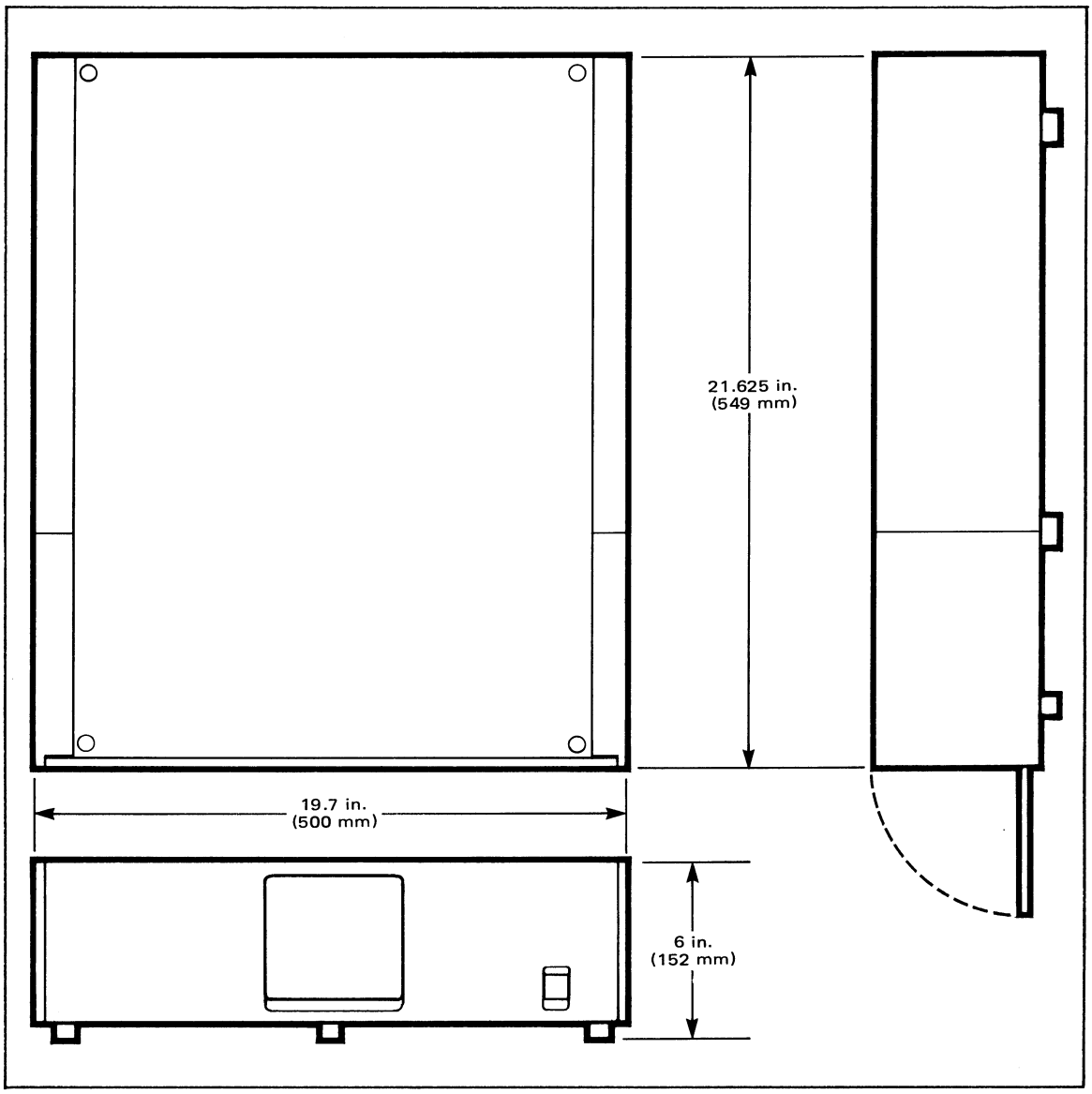

Figure 2-1. Outline and Mounting Dimensions

2-6 Power Requirements

The TBC-6 requires primary power from 90 Vac to 132 Vac or 180 Vac to 264 Vac; single-phase, three-wire, 50 Hz to 60 Hz, 150W.

To select appropriate input voltage range, change voltage range plug located on rear panel:

- Turn TBC-6 power off and unplug power cable.
- Raise sliding door to expose voltage range jumper plug. See Figure 2-2.

Table 2-1. Recommended Tools and Test Equipment

Equipment	Type/Functions
Waveform Monitor	Dual-channel, A-B signal subtraction mode. Tektronix 1481 or equivalent.
Vectorscope	Composite video and vector displays, differential gain and phase measurement, external and internal phase reference, Tektronix 521A or equivalent.
Signal Sources	Color bars, color black (switchable R-Y, B-Y components) variable setup level, 0-50% APL flat field, locked/unlocked subcarrier, modulated/unmodulated ramp, unmodulated stairstep, Tektronix 148 or equivalent.
Color Video Monitor	Monitor for viewing NTSC or PAL standard video. Tektronix 650 (NTSC) or 651 (PAL) or equivalent.
Extender Card	Ampex Part No. 1451725.
Tuning Tool	Technitool AF-12H or equivalent.

- Remove jumper plug and reinsert it so that proper line voltage is displayed.

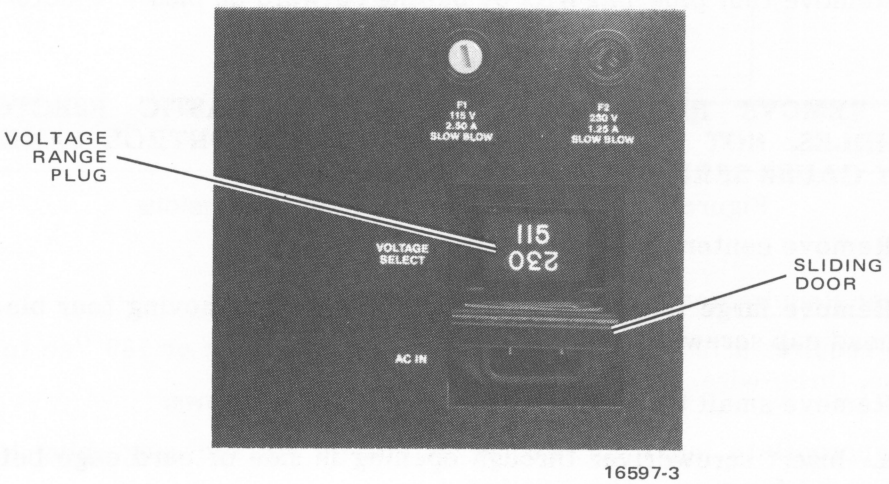

Figure 2-2. Voltage Range Plug

No fuse change is necessary when changing voltage range. The proper fuse is selected automatically. Fuse F1, used with 120V power sources, is Ampex Part No. 070-995; Bussman Manufacturing Co. Part No. GDC 2.50A 125V, or equivalent. Fuse F2, used with 250V power sources, is Ampex Part No. 070-470; Bussman Manufacturing Co. Part No. GDC 1.25A 250V or equivalent. Both fuses are glass cartridge, slow-blow type.

2-7 INSTALLING AND RACK MOUNTING THE TBC-6

The TBC-6 may be installed as a standalone unit, a table-top unit with the VPR-6, or a rack mount/consolette with slides. (An optional Console Mount Kit, Ampex Part No. 1451666, allows the unit to be installed in a studio console.) The rack-mounted configuration may be either flush in the rack or extended approximately six inches for alignment with the VPR-6 front panel.

The TBC-6 is shipped fully assembled in a standalone configuration in the Standalone Kit, Ampex Part No. 1451665. This configuration is used for table-top mounting with the VPR-6. The VPR-6's plastic feet rest in recesses in the top of the TBC-6 side trim panels.

For rack-mounted configurations the side trim panels must be removed and a slide assembly (provided in the optional Rack Mount and Consolette Kit, Ampex Part No. 1451667) must be installed. The following paragraphs describe disassembly and rack mounting procedures. Figure 2-3 shows disassembly views and rack mounting details.

2-8 Rack Mount Installation

STEP 1 Remove top cover (four captive screws).

STEP 2 Remove four plug-in PWAs by pulling outward on plastic ejector handles.

CAUTION

TO REMOVE PWAs, PULL ON BLACK PLASTIC EJECTOR HANDLES, NOT CONTROL PANELS. USING CONTROL PANELS MAY CAUSE SERIOUS DAMAGE TO THE PWA.

STEP 3 Remove center foot.

STEP 4 Remove large trim panels from each side by removing four black socket head cap screws.

STEP 5 Remove small trim panels from each side as follows:

a. Insert screwdriver through opening in side of card cage between fan and front mounting bracket.

b. Loosen and withdraw flathead screw straight back and out.

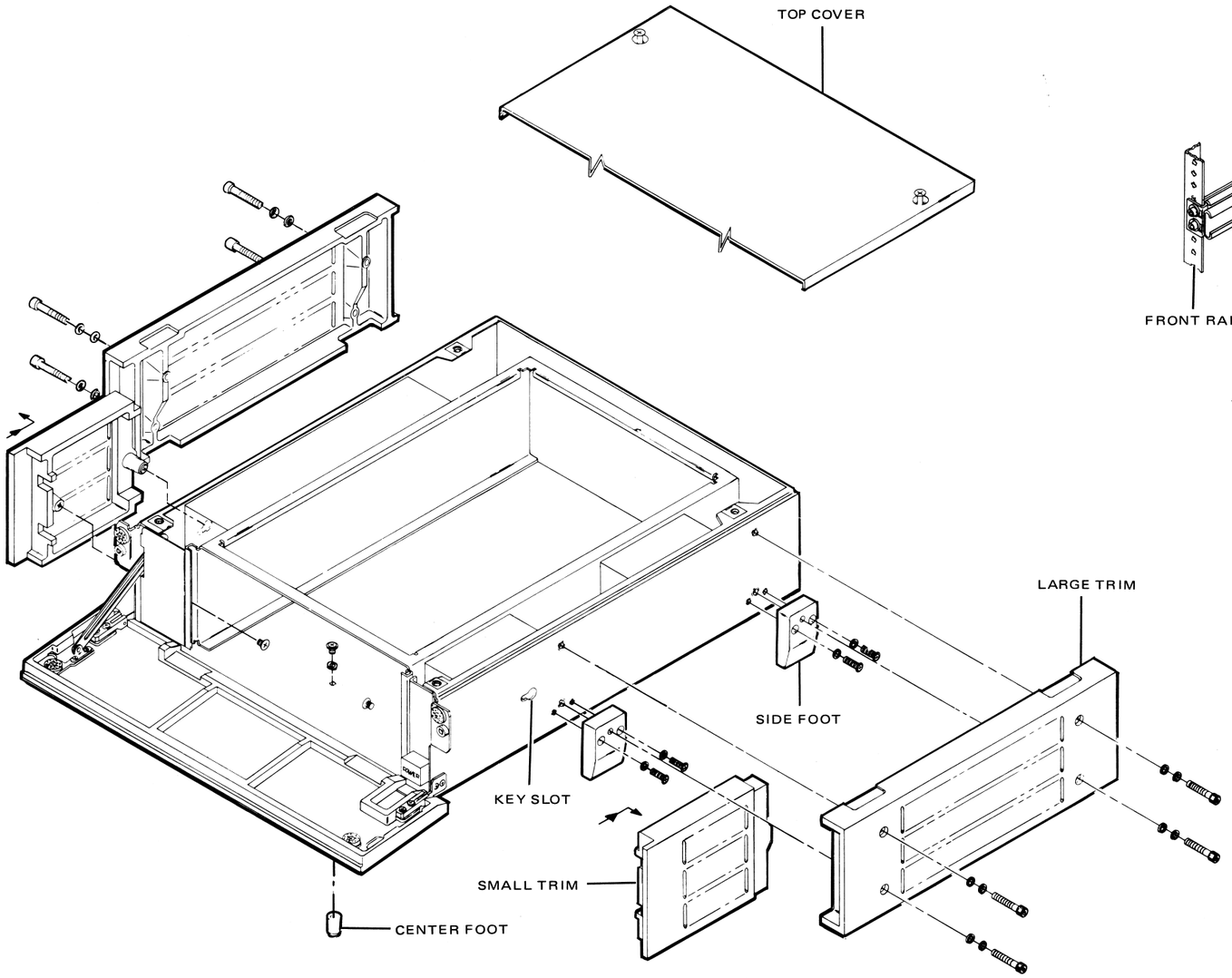

a. SIDE PANEL REMOVAL

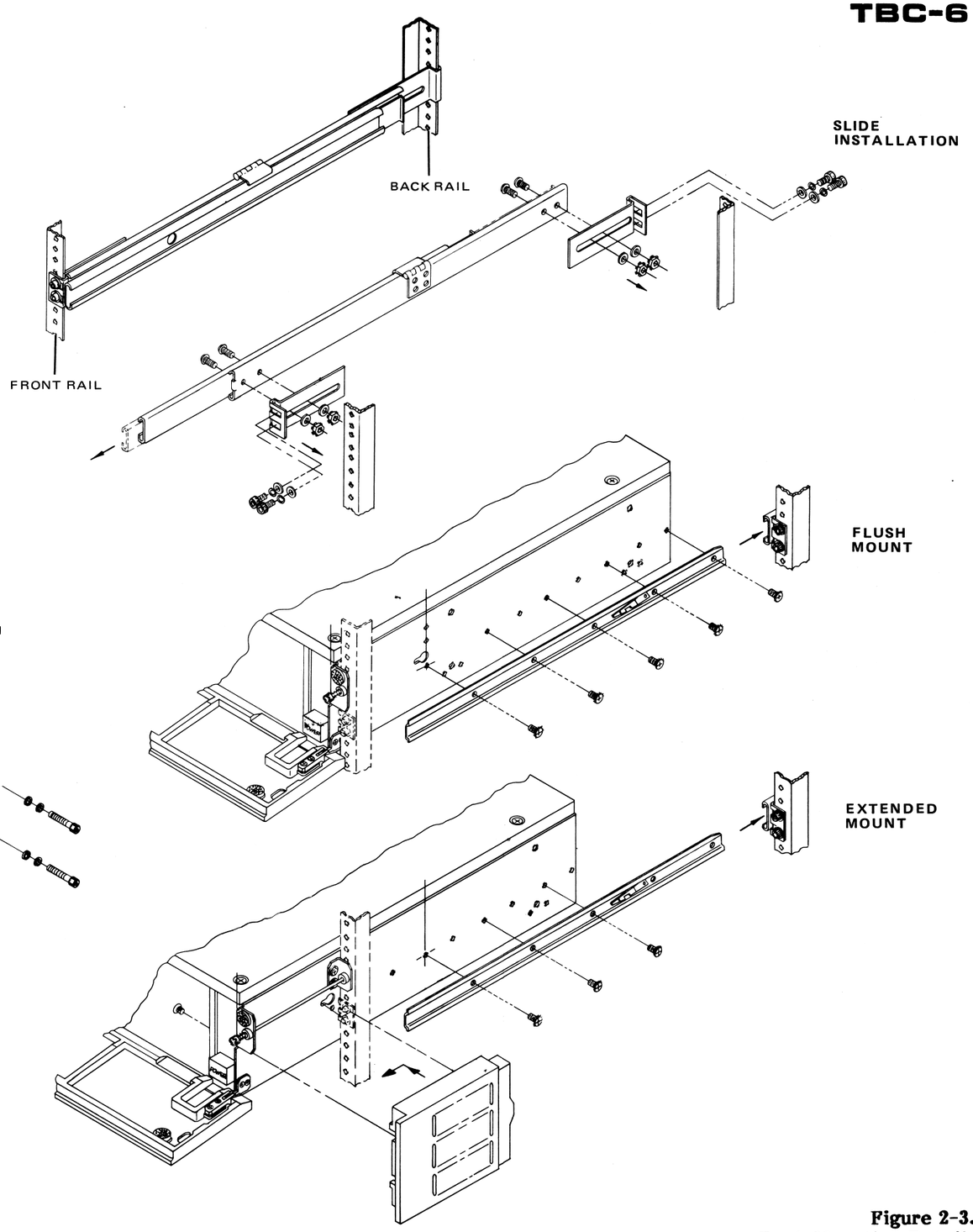

b. SLIDE MOUNTING

Figure 2-3.
Rack Mounting Details

c. Loosen second flathead screw and slide trim panel back until second screw head clears keyhole-shaped slot.

d. Pull trim panel straight out from side.

STEP 6 Remove four side feet by removing 8-32 panhead screws and flat washers.

STEP 7 Replace top cover. PWAs may be installed after unit is installed in rack.

STEP 8 Proceed with slide assembly installation described in paragraph 2-9.

2-9 Slide Assembly Installation

STEP 1 Remove inside slide section (smallest member) of slide unit by releasing trigger and pulling out. Retain inside section for mounting in rack.

STEP 2 Measure distance between front and rear rack rails.

STEP 3 Adjust mounting brackets to slides (at measured distance) and secure with 8-32 x 0.36-long panhead screws, no. 8 plain washers, and no. 8 hex nuts. Brackets are identical and adaptable to universal spacing. See Figure 2-3.

STEP 4 Secure slide brackets to front and back rails using 10-32 x 3/8 buttonhead black cap screws, no. 10 black lock washers, and no. 10 black plain washers.

STEP 5 Proceed with paragraph 2-10 for flush mounting. Proceed with paragraph 2-11 for extended mounting.

2-10 Flush Mounting Instructions

STEP 1 Secure slide members to side of chassis using 8-32 x 5/16 panhead screws, five per side. Note hole locations and dimensions shown in Figure 2-3.

STEP 2 Slip small spring over each short captive screw and install in front tabs.

STEP 3 Slide unit into rack and tighten captive screws.

2-11 Extended Mounting Instructions

STEP 1 Secure slide members to side of chassis using 8-32 x 5/16 panhead screws, three per side. Note hole locations and dimensions shown in Figure 2-3.

STEP 2 Add two small mounting brackets to chassis as shown in Figure 2-3 and secure, using 10-32 x 5/16 buttonhead black cap screws, no. 10 black lock washers, and no. 10 black plain washers.

STEP 3 Slip small spring over each long captive screw and thread through front tabs and into side tabs.

STEP 4 Install small trim panel by placing exposed screw head in key slot and pulling panel forward. Install no. 8 flathead screw through card cage keyhole and tighten in place.

STEP 5 Slide unit into rack and tighten captive screws.

2-12 INPUT/OUTPUT CONNECTIONS

All connections to the TBC-6 are made with BNC connectors and a 37-pin connector located on the rear panel. Table 2-2 shows the rear panel connectors and their functions.

Table 2-3 is a list of the 37 pin D-type connector signals and functions. This connector is a female plug with Ampex Part No. 140-726. A mating connector is provided in a cable assembly which has Ampex Part No. 1451712-01, and is available in the Miscellaneous Parts Kit, Ampex Part No. 1451758.

2-13 SETUP

The following paragraphs describe initial procedures required to set up the TBC-6 for normal operation.

2-14 TBC-6 and VPR-6 Interconnection

Prepare TBC-6 for operation with VPR-6 as follows:

STEP 1 Turn TBC-6 and VPR-6 power off.

STEP 2 Interconnect TBC-6 with VPR-6 as shown in Figure 2-4.

STEP 3 Set MODE switch on TBC-6 front panel to NORM position.

STEP 4 Turn TBC-6 and VPR-6 power on.

STEP 5 Connect a waveform monitor or oscilloscope to TBC-6 video output connector using 75Ω termination at waveform monitor or oscilloscope input.

STEP 6 Play back a prerecorded tape with color bar signal and verify that signal level is 1.0 Vp-p.

2-15 TBC-6 and Single-Wire Heterodyne VTR Interconnection

Prepare TBC-6 for operation with single-wire heterodyne VTR as follows:

STEP 1 Turn TBC-6 and VTR power off.

STEP 2 Interconnect TBC-6 with VTR as shown in Figure 2-5.

Table 2-2. Rear Panel Connector Descriptions

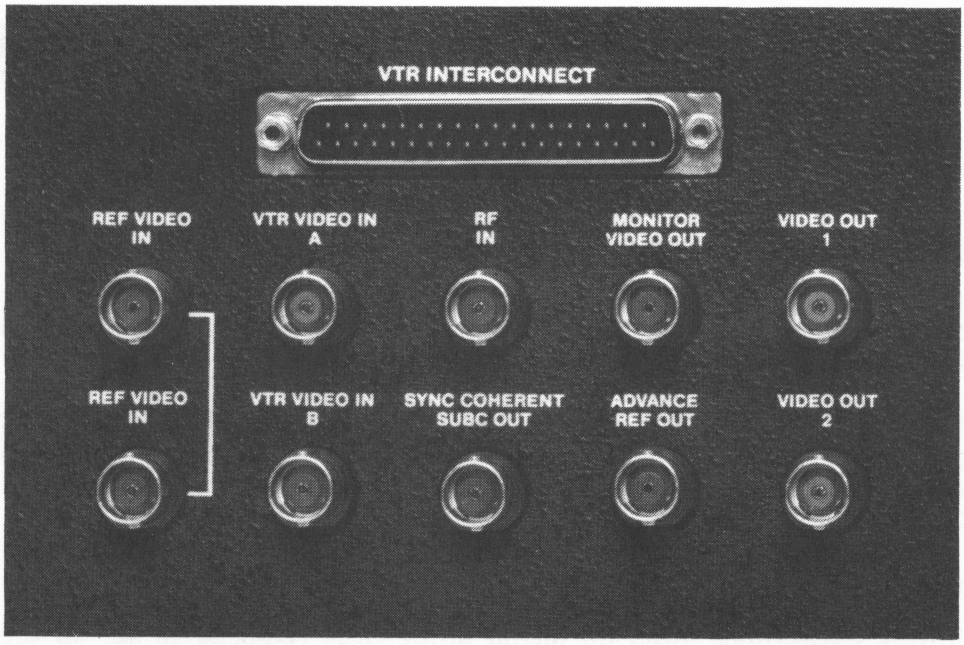

16597-1

Connector	Description
VTR VIDEO IN A and B	Composite video input, 1 Vp-p, 75 Ω.
REF VIDEO IN	Reference input, 1 Vp-p, high-impedance, loop-through connectors.
RF IN	RF input, 0.5V to 2.0V, for dropout compensation.
VIDEO OUT 1	Time-base corrected video output, 1.0 Vp-p composite, 75Ω.
VIDEO OUT 2	Time-base corrected video output, 1.0 Vp-p composite or 0.7 Vp-p noncomposite, 75Ω.
MONITOR VIDEO OUT	Video output for monitor, 1.0 Vp-p composite, 75Ω.
ADVANCE REF OUT	Composite sync or vertical drive output, 16 lines in advance of reference generator; 0.3V, 75Ω or -4V level, jumper selectable.
SYNC COHERENT SUBC OUT	Sync-coherent subcarrier output, 1.0 Vp-p, 75Ω
VTR INTERCONNECT	Interconnection for Ampex VPR-6.

Table 2-3. Rear Panel 37-Pin D-Type Connector Signals

Pin	Signal	Pin	Signal
1	Ground	20	Step Back 1
2	Ground	21	Step Back 2
3	Ground	22	(not used)
4	(not used)	23	Sync Retard
5	Edit Mute	24	Tachometer
6	Fast Shuttle	25	Head Switch/Vertical Dropout
7	Ground		
8	Ground	26	Playback Vertical
9	Zero Offset	27	Slow Motion
10	Ground	28	2H Gate
11	Ground	29	Dropout Pulse
12	Up/Down	30	Sync Head Processor
13	(not used)	31	Step Forward 1
14	Ground	32	Step Forward 2
15	Ground	33	(not used)
16	Ground	34	(not used)
17	Ground	35	(not used)
18	Ground	36	(not used)
19	Ground	37	(not used)

STEP 3 Set MODE switch on TBC-6 front panel to HET position.

STEP 4 Set heterodyne one-wire/two-wire switch S1 on Video Input PWA to one-wire (up) position.

STEP 5 Apply power to TBC-6 and VTR.

STEP 6 Connect a waveform monitor or oscilloscope to TBC-6 video output connector using 75Ω termination at waveform monitor or oscilloscope input.

STEP 7 Play back a prerecorded tape with color bar signal and verify that signal level is 1.0 Vp-p.

2-16 TBC-6 and Two-Wire Heterodyne VTR Interconnection

Prepare TBC-6 for operation with a two-wire heterodyne VTR by referring to Figure 2-6 and following steps 1 through 3 of paragraph 2-15. Set switch S1 on Video Input PWA to two-wire (down) position and proceed with steps 5 and 6 of paragraph 2-15.

2-17 TBC-6/VPR-6 and Heterodyne VTR Interconnection

Prepare TBC-6 for operation with heterodyne VTR and VPR-6 as follows:

STEP 1 Turn TBC-6 and VTR power off.

STEP 2 Interconnect TBC-6 with both VTRs as shown in Figure 2-7.

STEP 3 Set heterodyne one-wire/two-wire switch S1 on Video Input PWA to the appropriate position.

STEP 4 Apply power to TBC-6 and both VTRs.

STEP 5 Connect a waveform monitor or oscilloscope to video output connector of VPR-6 using 75Ω termination at input.

STEP 6 Play back a prerecorded tape with color bar signal and verify that signal level is 1.0 Vp-p.

2-18 SYSTEM PHASE ADJUSTMENT (NTSC)

Use the following procedure to adjust TBC-6 subcarrier and horizontal phase to match RS170A standard NTSC house reference. Figure 2-8 shows location of controls on Video Output PWA. (Remove jumper P17 from Video Output PWA and ground pin A of J17 before starting this procedure.)

STEP 1 Connect NTSC house reference to waveform monitor A input, looping through TBC-6 REF VIDEO IN connector. See Figure 2-9.

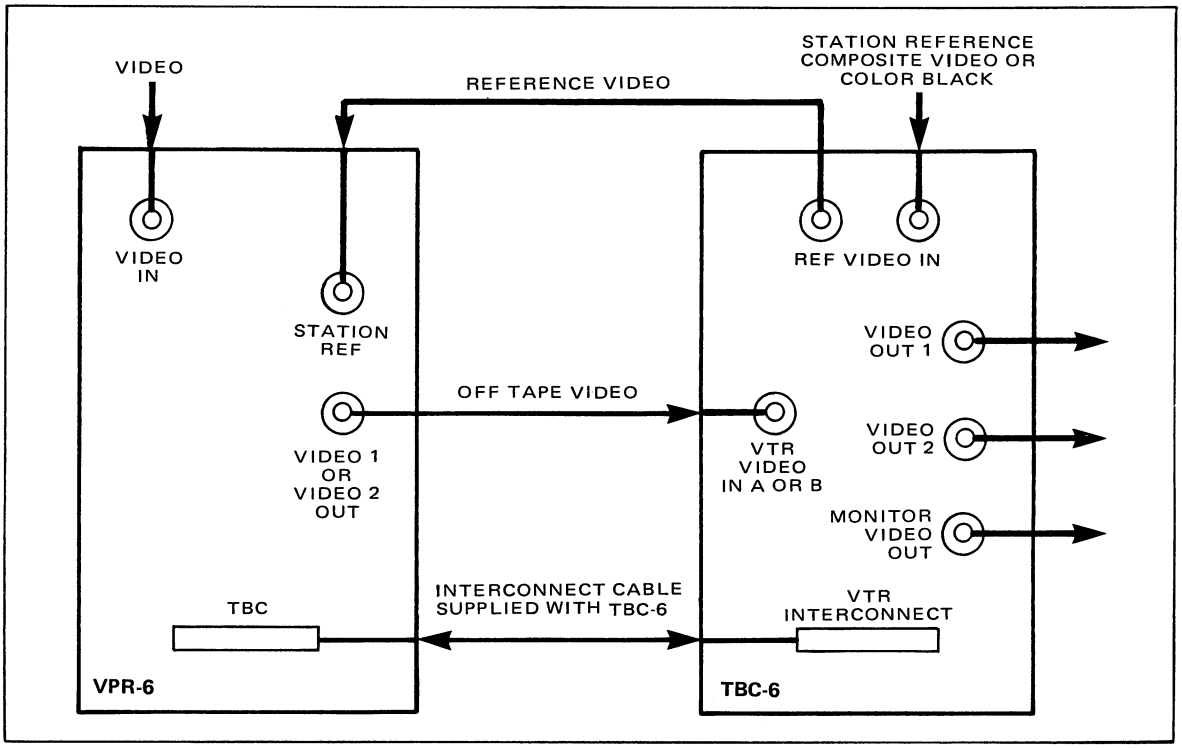

Figure 2-4. TBC-6/VPR-6 Interconnections

STEP 2 Connect TBC-6 output to waveform monitor B input. Set waveform monitor for A-B display.

STEP 3 Verify that reference video input is RS170A standard by observing that green indicator DS1 is lit. (Ensure that jumper P3 is in the A-B position.) If DS1 is not lit, jumper positions B-C with P3 and adjust R119 until DS1 lights.

STEP 4 Adjust SUBC PHASE R301 and HORIZ PHASE S3 to null reference and output bursts.

STEP 5 If non-RS170A standard TBC output video is desired, place jumper P12 in positions B-C and adjust R439 (NON-STD OUTPUT SYNC/BURST) so that reference and output sync are coincident on waveform monitor.

2-19 SYSTEM PHASE ADJUSTMENT (PAL)

Use the following procedure to adjust TBC-6 subcarrier and horizontal phase to match EBU standard PAL house reference. Figure 2-8 shows location of controls on Video Output PWA. (Ground pin 3 of U111 before starting this procedure.)

STEP 1 Connect PAL house reference to waveform monitor A input, looping through TBC-6 REF VIDEO IN connector. See Figure 2-9.

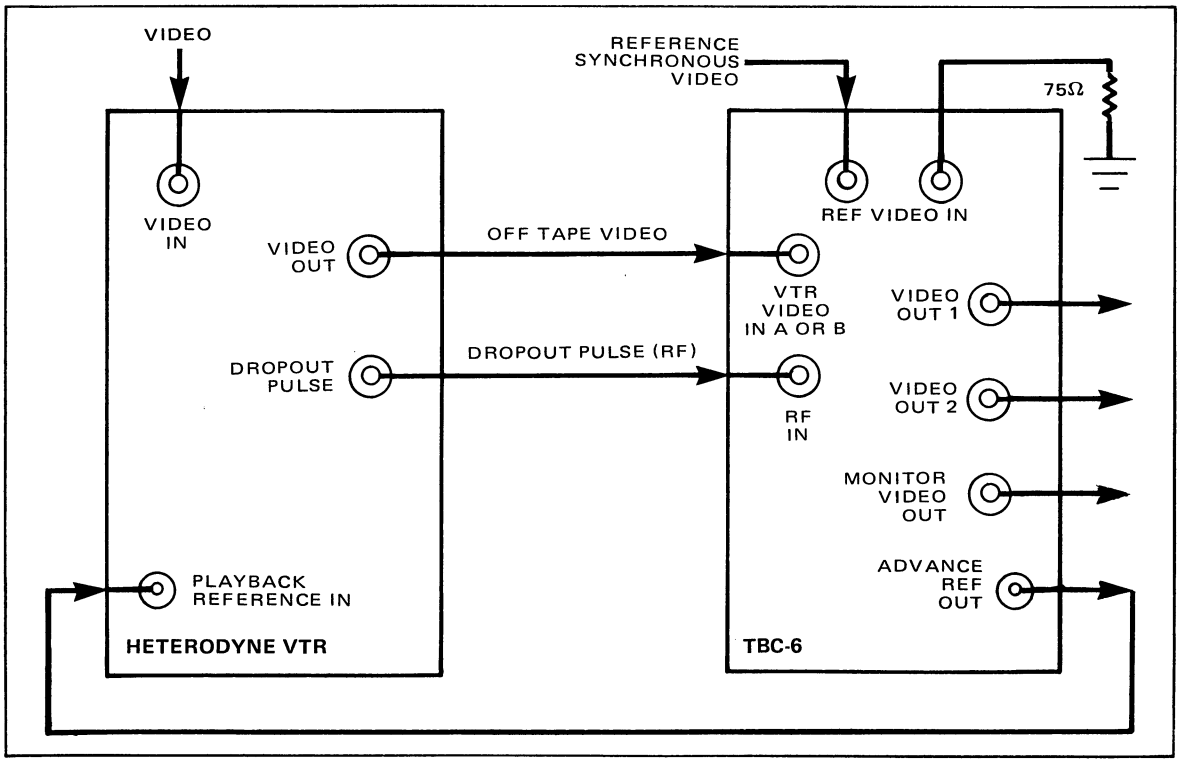

Figure 2-5. TBC-6/One-Wire Heterodyne Interconnections

STEP 2 Connect TBC-6 output to waveform monitor B input. Set waveform monitor for A-B display.

STEP 3 Adjust R11 INPUT SYNC/BURST CAL so that it is near the middle of its range and green indicator DS1 is lighted.

STEP 4 Adjust SUBC PHASE R380 in conjunction with HORIZ PHASE S5 to null reference and output bursts. See Figure 2-10.

Note

Burst envelopes may not coincide at this point.

STEP 5 Readjust R11 as required so that DS1 is lighted when the control is near its midrange setting.

STEP 6 Adjust S6 (horizontal range) for nearest coincidence of horizontal sync. See Figure 2-11.

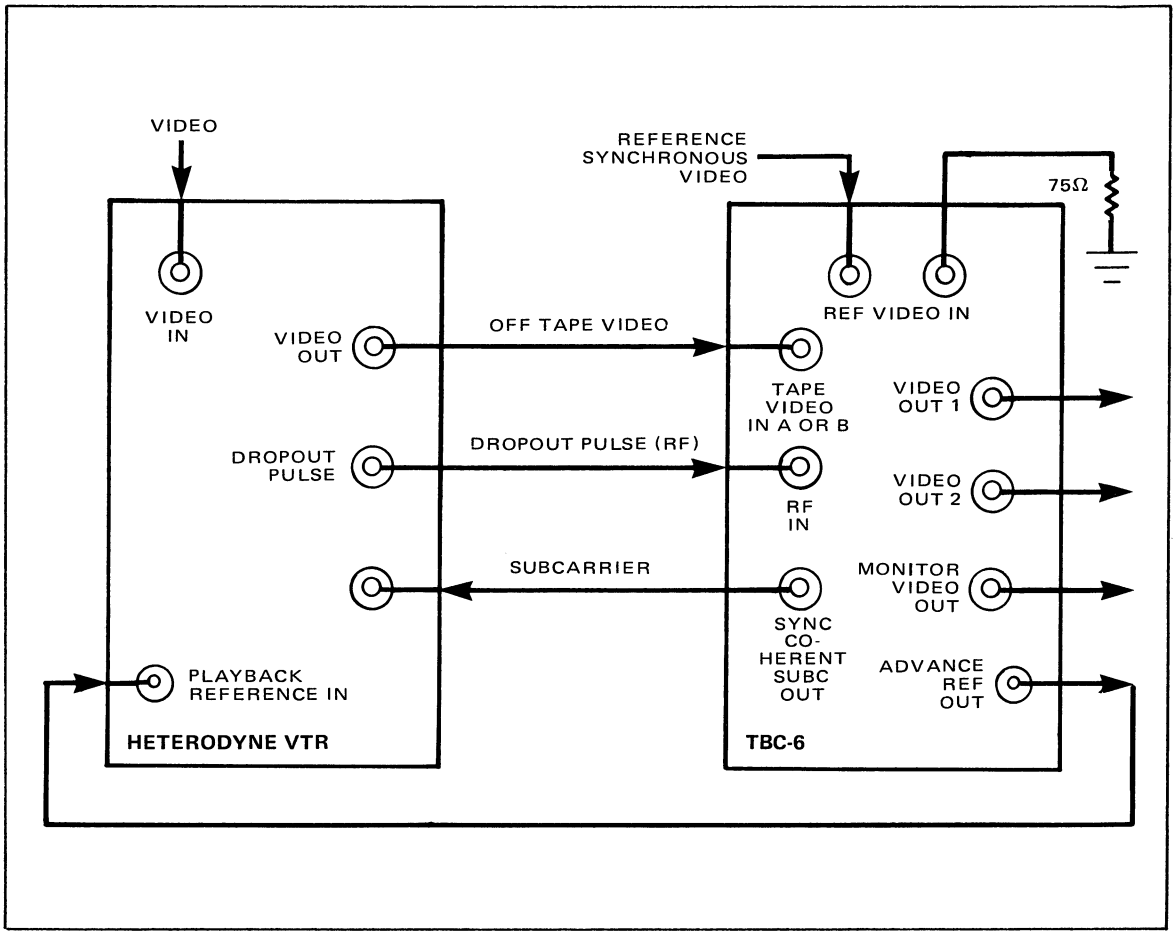

Figure 2-6. TBC-6/Two-Wire Heterodyne Interconnections

STEP 7 Readjust R11 so that DS1 is lighted and the burst envelopes (TBC output and reference input) coincide.

a. If R11 is at extreme counterclockwise position, increase setting of S6 by one and readjust R11 to light DS1.

b. If R11 is at extreme clockwise position, decrease setting of S6 by one and readjust R11 to light DS1.

STEP 8 If non-EBU standard TBC output video is desired, place jumper P1 in positions A-C and adjust R73 (variable sync/burst) for coincidence of reference and output sync.

2-20 JUMPER-SELECTED FEATURES

The TBC-6 can be configured for a number of videotape recorder options. Table 2-4 lists jumpers and optional features for both NTSC and PAL versions.

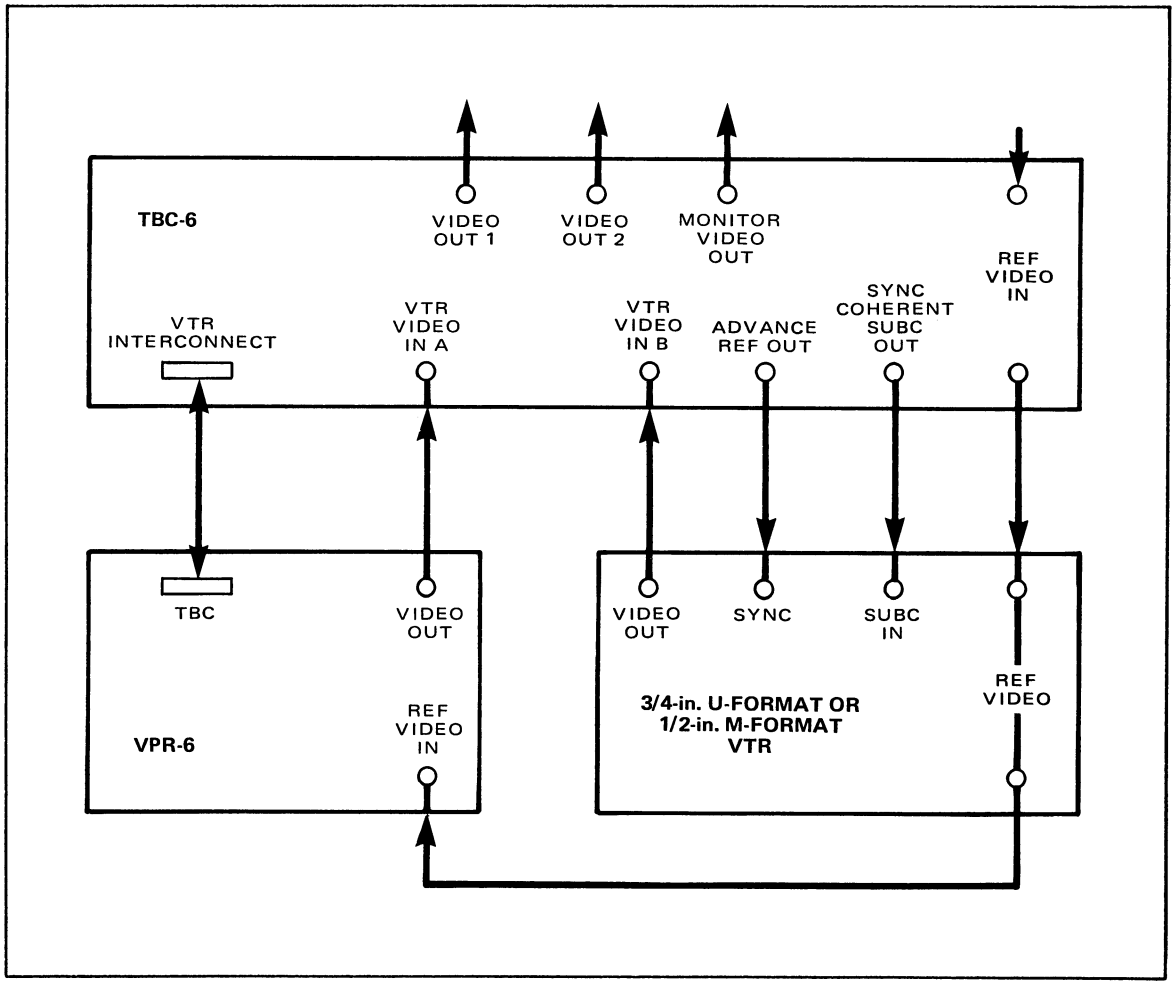

Figure 2-7. TBC-6/VPR-6 and Heterodyne VTR Interconnections

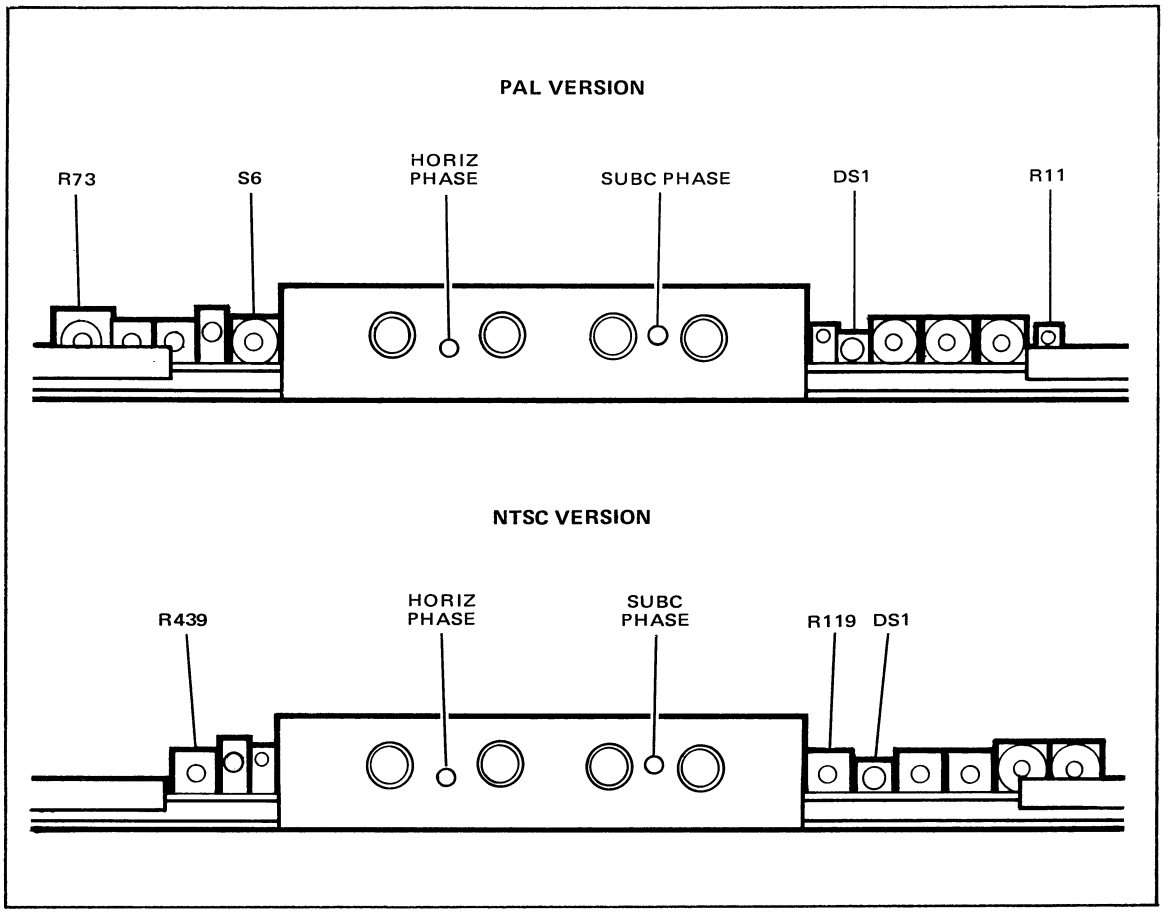

Figure 2-8. Video Output PWA Adjustment Locations

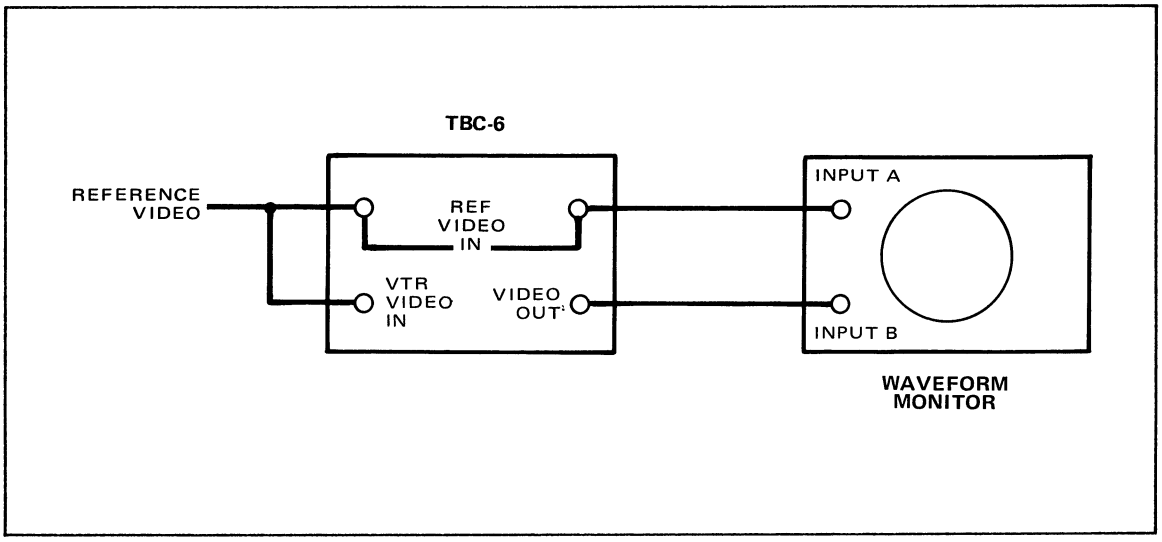

Figure 2-9. Phase Adjustment Setup

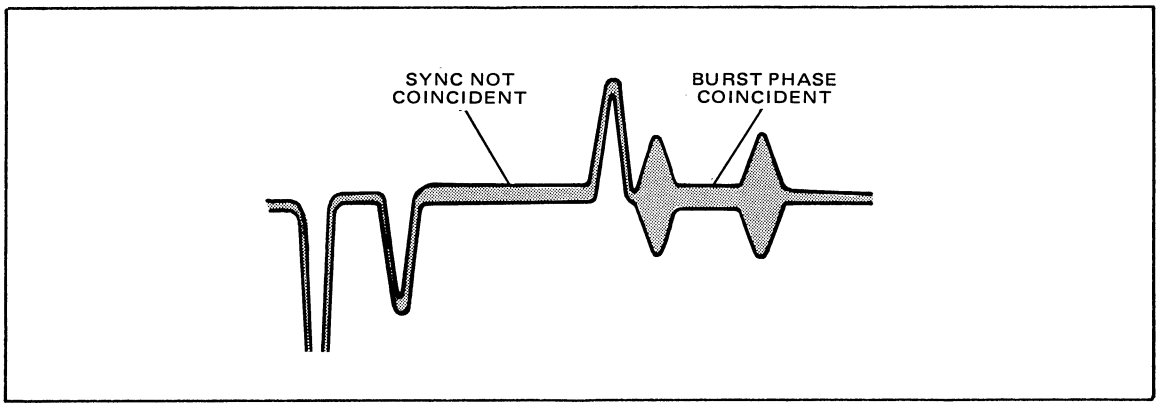

Figure 2-10. Burst Null Waveform

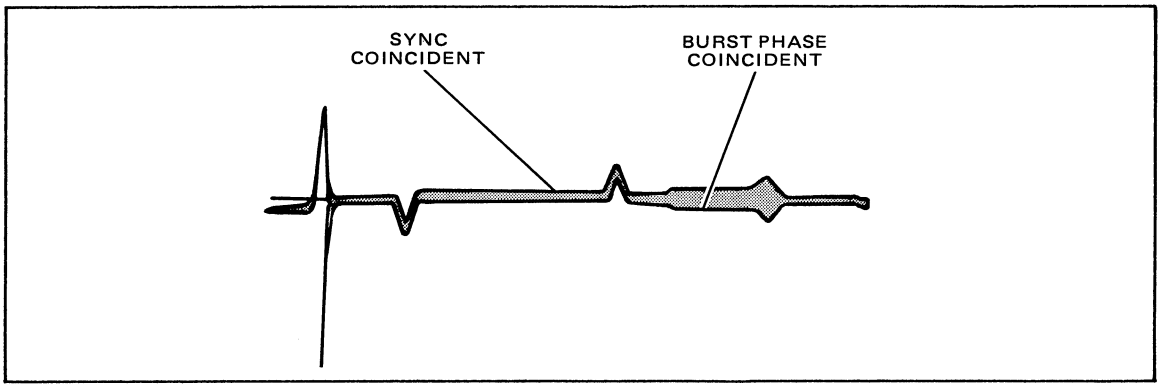

Figure 2-11. Sync Coincidence Waveform

Table 2-4. Jumper-Selected Features

Jumper NTSC/PAL	Description	Position		Option
		NTSC	PAL	
Video Input PWA				
P12/P10	RF dropout	A-B B-C	A-B B-C	Normal VPR-20
P14/P14	Vertical	A-B B-C	A-B B-C	Broad pulse Equalizing pulse (VPR-20 only)
Tape Clock PWA				
P12/P15	Edit ready	A-B A-C	A-B A-C	360° 180°

(Continued next page)

Table 2-4. Jumper-Selected Features (Continued)

Jumper NTSC/PAL	Description	Position		Option
		NTSC	PAL	
Memory PWA				
S7*/P13	Memory centering	UP DN	A-B A-C	Vertical (normal) Memory
Video Output PWA				
P12/P1	RS170A/EBU/variable sync/burst	A-B B-C	A-B A-C	RS170A/EBU Variable
P14/P4**	Advanced reference level	B-A B-C	A-B A-C	-4V level Video level
P14/P15**	Comp sync/vertical	B-C B-D	A-B A-C	Composite sync Vertical drive
P5/P12	Video out 2 sync	A-B B-C	A-B A-C	On Off

* S7 is shown in Figure 3-1, *Secondary Controls*

** Do not position PAL jumper P15 in A-C when P4 is in position A-B. (NTSC jumper P14 replaces P4/P15 in PAL version.)

SECTION 3
OPERATION

3-1 INTRODUCTION

This section provides a description of the TBC-6 controls. Only those controls or functions accessible to the operator or maintenance personnel from the front of the unit are described. The primary controls and indicators are common to both NTSC and PAL versions.

3-2 PRIMARY CONTROLS AND INDICATORS

Table 3-1 is a listing of front panel controls/indicators and their functions.

Table 3-1. Primary Operating Controls and Indicators

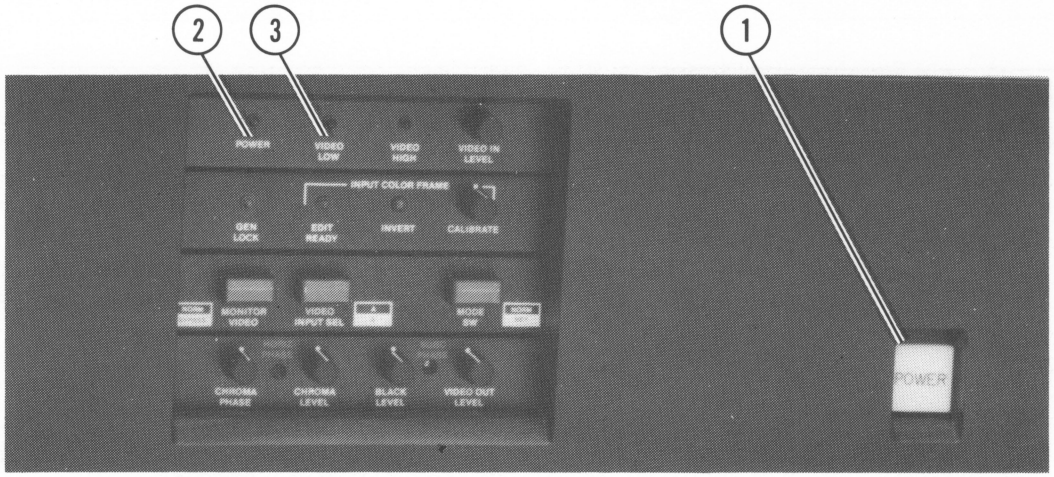

16193-3

Index No.	Control/Indicator	Description
1	POWER switch	Applies primary power to TBC-6.
2	POWER indicator	Lighted when +5 Vdc is present.
3	VIDEO LOW indicator	Lighted when nominal input signal level is less than 0.8 Vp-p.

(Continued next page)

Table 3-1. Primary Operating Controls and Indicators (Continued)

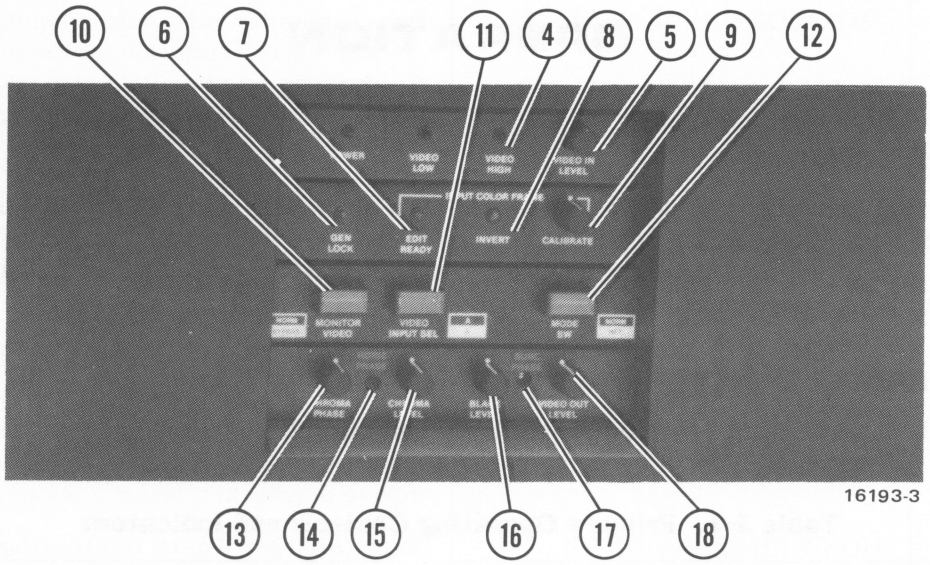

Index No.	Control/Indicator	Description
4	VIDEO HIGH indicator	Lighted when nominal input signal level is greater than 1.25 Vp-p.
5	VIDEO IN LEVEL control*	Provides ±3 dB range of adjustment for input video level. Used in special cases to adjust video level in conjunction with VIDEO LOW and VIDEO HIGH indicators.
6	GEN LOCK indicator	Lighted when an acceptable genlock signal is supplied to TBC-6.
7	EDIT READY indicator	Indicates TBC-6 properly color framed.
8	INVERT indicator	Indicates input ScH deviation in excess of ±90°.
9	CALIBRATE control	Calibrates edit ready indicator for a specific ScH phase (detent position is RS170A or EBU setting).

(Continued next page)

Table 3-1. Primary Operating Controls and Indicators (Continued)

Index No.	Control/Indicator	Description
10	MONITOR VIDEO switch	Selects monitor video output signal. In NORM (normal) position, processed TBC-6 video is selected. In BYPASS position, video input from VTR is routed to monitor video output.
11	VIDEO INPUT SEL switch	Selects tape video input signal from tape video A or B input connector.
12	MODE SW switch	Selects direct color video processing in NORM position or heterodyne video in HET (heterodyne) position.
13	CHROMA PHASE control*	Adjusts phase of picture chrominance information with respect to color burst during playback.
14	HORIZ PHASE switch screwdriver-operated	Adjusts output timing relative to reference in 4 Fsc** steps.
15	CHROMA LEVEL control*	Adjusts chroma level ±3 dB.
16	BLACK LEVEL control*	Adjusts black level for nonstandard video input.
17	SUBC PHASE control screwdriver-operated	Provides continuous video output signal phase adjustment with respect to reference, within 1/4 cycle of subcarrier.**
18	VIDEO OUT LEVEL control*	Adjusts level of video output signal from +3 dB with respect to input signal to zero.

* Detent is the unity or normal setting.
** PAL version; NTSC version is Fsc steps or cycles.

3-3 SECONDARY CONTROLS AND INDICATORS

Table 3-2 is a listing of PWA edge controls and indicators and their functions.

3-4 NORMAL OPERATION

Prior to playing a tape for correction, use the steps in the following two paragraphs to verify operation of TBC-6.

3-5 Video and Black Level Unity Adjustments

Check video and black levels with the VIDEO OUT LEVEL and BLACK LEVEL controls set to unity position and proceed as follows:

STEP 1 Record and play back a 1-min segment of a color-bar signal.

STEP 2 Connect a waveform monitor or oscilloscope to VIDEO OUT 1 connector on TBC-6. Terminate video signals with 75Ω at monitor or oscilloscope. While playing back tape, check that video level and black level are correct.

STEP 3 If video or black levels are incorrect, adjust VIDEO OUT LEVEL or BLACK LEVEL controls on front panel of TBC-6.

3-6 Chroma Phase Unity Adjustment

Using a tape that is recorded with the correct burst-to-chroma phase, place the CHROMA PHASE control in the unity position and proceed as follows:

STEP 1 Connect a vectorscope to VIDEO OUT 1 connector on TBC-6. Terminate video signals with 75Ω at vectorscope.

STEP 2 While playing back tape, adjust vectorscope phase control to place burst color vector at correct point on polar display.

STEP 3 Adjust CHROMA PHASE control on front panel of TBC-6 as required to place color vectors at correct points on display.

Table 3-2. Secondary Operating Controls and Indicators

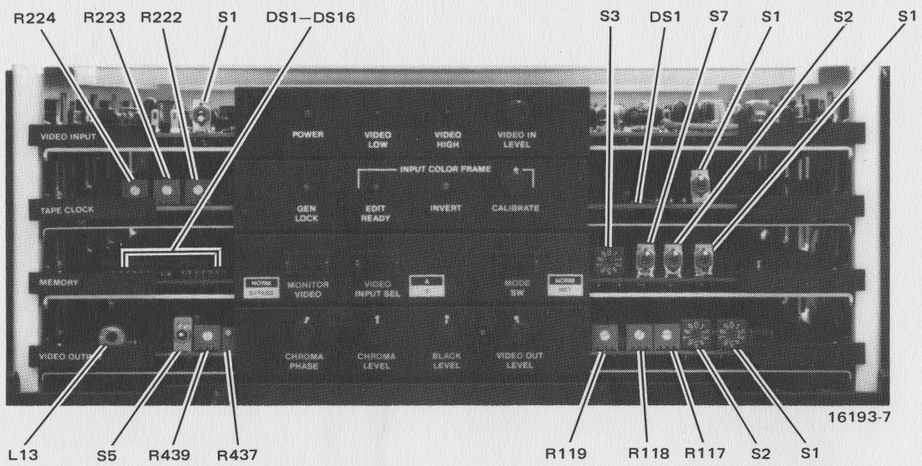

NTSC

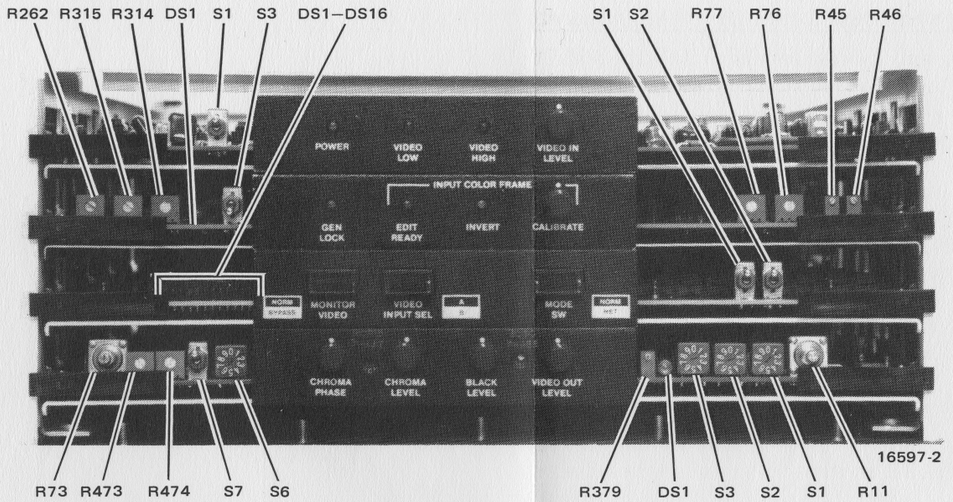

PAL

Reference Designator NTSC	Reference Designator PAL	Name	Description
Video Input PWA:			
S1	S1	Heterodyne 1-wire/ 2-wire	In heterodyne operating mode, selects 1-wire or 2-wire operation.
Tape Clock PWA:			
R224	R262	Normal phase comp center	Maintenance adjustment
N/A	R315	Heterodyne Phase comp center	Maintenance adjustment
R223	N/A	Heterodyne Burst/ sync phase	Maintenance Adjustment
R222	R314	Vertical Delay	Maintenance Adjustment
DS1	DS1	Search indicator	Indicates extended search VCO operation.
S1	S3	Internal/External Search	Selects between TBC-6 internal and external (VPR-6) VCO switching.
N/A	R45	Decode Phase	Maintenance adjustment
N/A	R46	Encode Phase	Maintenance adjustment

Reference Designator NTSC	Reference Designator PAL	Name	Description
Tape Clock PWA: Continued			
N/A	R76	V-Axis Compensation	Maintenance adjustment
N/A	R77	Vector Position Compensation	Maintenance adjustment
Memory PWA:			
DS1-16	DS1-16	Memory Center Indicators	Indicate memory read-write condition. Left = read faster than write; right = write faster than read.
S1	S1	Dropout Compensator	Up–enable; Down–disable.
S2	S2	Velocity Compensator	Up–enable; Down–disable.
Video Output PWA:			
S1	S2	Vertical Blanking –slow (wide)	Adjustable width vertical blanking slow-motion mode.
S2	S3	Vertical Blanking –normal	Adjustable width vertical blanking in normal mode.
S3	S5	Horizonal Phase	Adjusts system timing
S5	S7	Burst Control	Up–auto; Mid–on(color); Down–off (monochrome).

Reference Designator NTSC	Reference Designator PAL	Name	Description
Video Output PWA: Continued			
R117	R473	H-Blanking Leading Edge	Adjust blanking as required.
R118	R474	H-Blanking Trailing Edge	Adjust blanking as required.
R119	N/A	Nonstandard Burst Crossing	Used when input is non-RS170A.
N/A	R11	Input Sync/Burst	Locks sync generator reference for color framing.
R437	R239	Burst Phase	Maintenance adjustment
R439	R73	Variable Sync/Burst	Allows sync/burst phase adjustment for nonstandard or standard output. (R428 /R74 = standard)
DS1	DS1		Indicates proper sync/burst.
N/A	S1	Read Pulse Position	Sets horizontal picture position with respect to reference.
N/A	S6	Horizontal Phase Range	Sets range for system timing (Fsc steps).

APPENDIX A

SELECTABLE JUMPER OPTIONS: NTSC VERSION

Tables A-1 through A-4 are lists of individual jumpers and position options. If a problem is encountered during installation or after maintenance on any PWA, check jumper positions on individual PWAs. Jumper options should conform to normal jumper settings or a specific option as required by a particular system configuration.

Table A-1. NTSC Jumper Options, Video Input PWA

Jumper	Description	Position	Option
P1	Slow motion chroma	A-B Removed	Normal Factory test
P2	Slow motion chroma	A-B Removed	Factory test Normal
P3	6 MHz LPF	A-B Removed	Factory test Normal
P4	6 MHz LPF	A-B Removed	Normal Factory test
P5	2.5 MHz luma LPF	A-B Removed	Factory test Normal
P6	2.5 MHz luma LPF	A-B Removed	Factory test Normal
P7	2.5 MHz luma LPF	A-B Removed	Normal Factory test
P8	2.5 MHz luma LPF	A-B Removed	Normal Factory test
P9	2.5 MHz luma LPF	A-B Removed	Factory test Normal
P10	Burst locked oscillator	A-B Removed	Factory test Normal
P11	Search dropout range	A-B B-D B-C	On Off Factory test

(Continued next page)

Table A-1. NTSC Jumper Options, Video Input PWA (Continued)

Jumper	Description	Position	Option
P12	RF dropout	A-B B-C	Normal VPR-20
P13	Heterodyne encode 180°	A-B B-C	Normal 180°
P14	Vertical	A-B B-C	Broad pulse (normal) Equalizing (VPR-20 only)
P15	Color Processor	A-B Removed	Normal Factory test
P16	H gate	A-B Removed	Normal Factory test

Table A-2. NTSC Jumper Options, Tape Clock PWA

Jumper	Description	Position	Option
P1	X2 disable	A-B B-C	Normal Off
P2	Search VCO down	A-B A-C	Normal Factory test
P3	Search VCO up	A-B A-C	Normal Factory test
P4	Normal VCO	A-B A-C	Normal Factory test
P5	Sync terminate	A-B A-C A-D A-E	Auto (normal) On Off Up
P6	Line error	A-B A-C	Normal Factory test
P7	Burst loop	A-B A-C	Normal Factory test
P8	Burst/sync ramp	A-B Removed	Normal Factory test

(Continued next page)

Table A-2. NTSC Jumper Options, Tape Clock PWA (Continued)

Jumper	Description	Position	Option
P9	Tape vertical	A-B A-C	Normal Factory test
P10	Vertical dropout	A-B A-C	Normal Wide (Het)
P11	7.8 kHz reset	A-B A-C	On (normal) Off
P12	Edit ready	A-B A-C	360° 180°
P13	Edit ready inhibit	A-B Removed	Normal Factory test
P14	Vertical noise	A-B A-C	Normal Low
P15	Inhibit	A-B A-C	Normal Factory test
P16	Color present	A-B A-C	Normal Factory test
P17	Reset enable	A-B A-C	Normal Factory test
P18	Sync head	A-B A-C	Auto Off (normal)
P19	Playback vertical	A-B A-C	Normal Factory test
P20	+90°	A-B A-C	Normal Factory test
P21	−90°	A-B A-C	Normal Factory test
P22	Qualify	A-B A-C	Normal Factory test
P23	VCO mode	A-B A-C A-D	Auto Search LC (Het)

(Continued next page)

Table A-2. NTSC Jumper Options, Tape Clock PWA (Continued)

Jumper	Description	Position	Option
P24	Normal VCO disable	A-B A-C	Normal Factory test
P25	Search write	A-B A-C	Normal Factory test

Table A-3. NTSC Jumper Options, Memory PWA

Jumper	Description	Position	Option
P1	Read 4Fsc oscillator	A-B B-C	Normal Factory test
P2	Quadrant offsets	A-B B-C	Normal Factory test
P3	Velocity compensator	A-B B-C	On (Normal) Off
P4	Line error gain	A-B B-C	Normal Factory test
P5	Write vertical processing	A-B B-C	On (normal) Off
P6	Write process logic	A-B B-C	Normal Disable A
P7	Overload mode	A-B B-C	Normal Soft
P8	Rewrite	A-B B-C	Normal Disable RW
P9	Dual write	A-B B-C	Normal Disable DW
P10	Start read pulse	A-B Removed	Normal Disable
P11	Read 4 Fsc feedback	A-B Removed	Normal Factory test
P12	Read 4 Fsc output	A-B Removed	Normal Factory test
P13	Slow-motion centering	A-B B-C	On (normal) Off

Table A-4. NTSC Jumper Options, Video Output PWA

Jumper	Description	Position	Option
P1	Output clamp	A-B B-C	Normal Factory test
P2	Input clamp	A-B B-C	Normal Factory test
P3	Input reference	A-B B-C	RS170A Nonstandard
P4	Sine X/X	A-B Removed	Factory test Normal
P5	Video out 2 sync	A-B B-C	On Off
P6	Chroma gain	A-B B-C	Normal Factory test
P7	Black clip clamp	A-B Removed	Normal Factory test
P8	Video out	A-B B-C	Normal Factory test
P9	Sine X/X	A-B Removed	Normal Factory test
P10	Sine X/X	A-B Removed	Normal Factory test
P11	D/A output	A-B B-C	Normal Factory test
P12	Nonstandard/RS170A sync/burst	A-B B-C	RS170A Nonstandard
P13	Sync blank	A-B B-C	Normal Wide
P14	Advance reference level	A-B B-C B-D	−4V comp sync .3V sync burst −4V vert pulse
P15	Sine X/X	A-B Removed	Factory test Normal
P16	Color search	A-B B-C	On Off

(Continued next page)

Table A-4. NTSC Jumper Options, Video Output PWA (Continued)

Jumper	Description	Position	Option
P17	Z offset	A-B B-C	16 lines 8 lines
P18	Low pass filter	A-B Removed	Factory test Normal

APPENDIX B

SELECTABLE JUMPER OPTIONS: PAL VERSION

Tables B1 through B4 are lists of individual jumpers and position options. If a problem is encountered during installation or after maintenance on any PWA, check jumper positions on individual PWAs. Jumper options should conform to normal jumper settings or a specific option as required by a particular system configuration.

Table B-1. PAL Jumper Options, Video Input PWA

Jumper	Description	Position	Option
P1	2.5 MHz luma LPF	Removed A-B	Normal Factory test
P2	2.5 MHz luma LPF	Removed A-B	Normal Factory test
P3	2.5 MHz luma LPF	A-B Removed	Normal Factory test
P4	2.5 MHz luma LPF	A-B Removed	Normal Factory test
P5	2.5 MHz luma LPF	Removed A-B	Normal Factory test
P6	6 MHz LPF	Removed A-B	Normal Factory test
P7	6 MHz LPF	A-B Removed	Normal Factory test
P8	Burst locked oscillator	A-B Removed	Factory test Normal
P9	Search dropout range	A-B B-D B-C	On (normal) Off Factory test
P10	RF dropout	A-B B-C	Normal VPR-20

(Continued next page)

Table B-1. PAL Jumper Options, Video Input PWA (Continued)

Jumper	Description	Position	Option
P11	Test ramp	A-B B-C	Normal Test ramp
P12	H-gate	A-B Removed	Normal Factory test
P14	Vertical	A-B B-C	Broad pulse (normal) Equalizing pulse (VPR-20 only)
P15	Dropout gate	A-B B-C	Off (normal) On
P16	Decode error	A-B A-C	Normal Factory test

Table B-2. PAL Jumper Options, Tape Clock PWA

Jumper	Description	Position	Option
P1	Search VCO up	A-B A-C	Normal Factory test
P2	Normal VCO	A-B A-C	Normal Factory test
P3	Search VCO down	A-B A-C	Normal Factory test
P4	Encode	A-B A-C	Normal Factory test
P5	Line error	A-B A-C	Normal Factory test
P6	25 Hz	A-B A-C	Normal Factory test
P7	Burst loop	A-B A-C	Normal Factory test

(Continued next page)

Table B-2. PAL Jumper Options, Tape Clock PWA (Continued)

Jumper	Description	Position	Option
P8	Sync terminate	A-B A-C A-D A-E	Auto (normal) On Off Up
P9	Burst/sync ramp	A-B Removed	Normal Factory test
P10	X2 disable	A-B A-C	Normal Off
P11	+90°	A-B A-C	Normal Factory test
P12	Line-by-line correction	A-B A-C	Normal Factory test
P13	-90°	A-B A-C	Normal Factory test
P14	Vel comp process	A-B A-C	Normal Factory test
P15	Edit ready	A-B A-C	360° 180°
P16	Sync head	A-B A-C	Off (Normal) Auto
P17	Edit ready inhibit	A-B A-C	Normal Factory test
P18	Vertical dropout	A-B A-C	Normal Wide (Het)
P19	Inhibit	A-B A-C	Normal Factory test
P20	Tape vertical	A-B A-C	Normal Factory test
P21	Color present	A-B A-C	Normal Factory test
P22	Vertical noise	A-B A-C	Normal Low

(Continued next page)

Table B-2. PAL Jumper Options, Tape Clock PWA (Continued)

Jumper	Description	Position	Option
P23	7.8 kHz reset	A-B A-C	On (normal) Off
P24	Write vertical processor	A-B A-C	On (normal) Off
P25	Qualify	A-B A-C	Normal Factory test
P26	Write Delay	A-B A-C	Normal Factory test
P27	Playback vertical	A-B A-C	Normal Factory test
P28	Normal VCO disable	A-B A-C	Normal Factory test
P29	Reset enable	A-B A-C	Normal Factory test
P30	VCO mode	A-B A-C A-D	Auto Search LC (het)

Table B-3. PAL Jumper Options, Memory PWA

Jumper	Description	Position	Option
P1	Read 4Fsc feedback	A-B Removed	Normal Factory test
P2	Read 4Fsc output	A-B Removed	Normal Factory test
P3	Read 4Fsc oscillator	A-B A-C	Normal Factory test
P4	Quadrant offsets	A-B A-C	Normal Factory test

(Continued next page)

Table B-3. PAL Jumper Options, Memory PWA (Continued)

Jumper	Description	Position	Option
P5	Line-by-line error	A-B A-C A-D	Normal Factory test Factory test
P6	Velocity compensator	A-B A-C	On (normal) Off
P7	Line error gain	A-B A-C	Normal Factory test
P8	V-axis disable	A-B A-C	Normal Factory test
P9	Write process logic	A-B A-C	Normal Disable A
P10	Overload mode	A-B A-C	Normal Soft
P11	Rewrite	A-B A-C	Normal Disable RW
P12	Dual write	A-B A-C	Normal Disable DW
P13	Memory centering	A-B A-C	Vertical (normal) Memory
P14	Write vertical processing	A-B A-C	On (normal) Off
P15	Slo-mo center	A-B A-C	On (normal) Off

Table B-4. PAL Jumper Options, Video Output PWA

Jumper	Description	Position	Option
P1	EBU/variable sync/ burst	A-B A-C	EBU Variable
P2	Output clamp	A-B B-C	Normal Factory test

(Continued next page)

Table B-4. PAL Jumper Options, Video Output PWA (Continued)

Jumper	Description	Position	Option
P3	Input clamp	A-B A-C	Normal Factory test
P4	Advanced reference level	A-B A-C	-4V level Video level
P5	Sine X/X	A-B Removed	Factory test Normal
P6	Sine X/X	A-B Removed	Factory test Normal
P7	LPF	A-B Removed	Factory test Normal
P8	Chroma gain	A-B A-C	Normal Factory test
P9	Black clip clamp	A-B A-C	Normal Factory test
P10	Video out	A-B A-C	Normal Factory test
P11	Sine X/X	A-B Removed	Normal Factory test
P12	Video out 2 sync	A-B A-C	On Off
P13	Sine X/X	A-B Removed	Normal Factory test
P14	D/A output	A-B A-C	Normal Factory test
P15	Advanced reference	A-B A-C	Composite sync Vertical drive
P16	Sync blank	A-B Removed	Normal Factory test
P17	Reference 4Fsc	A-B Removed	Normal Factory test

AMPEX

23302

Printed in USA