# emcomat 7 · 7L
# maximat V10

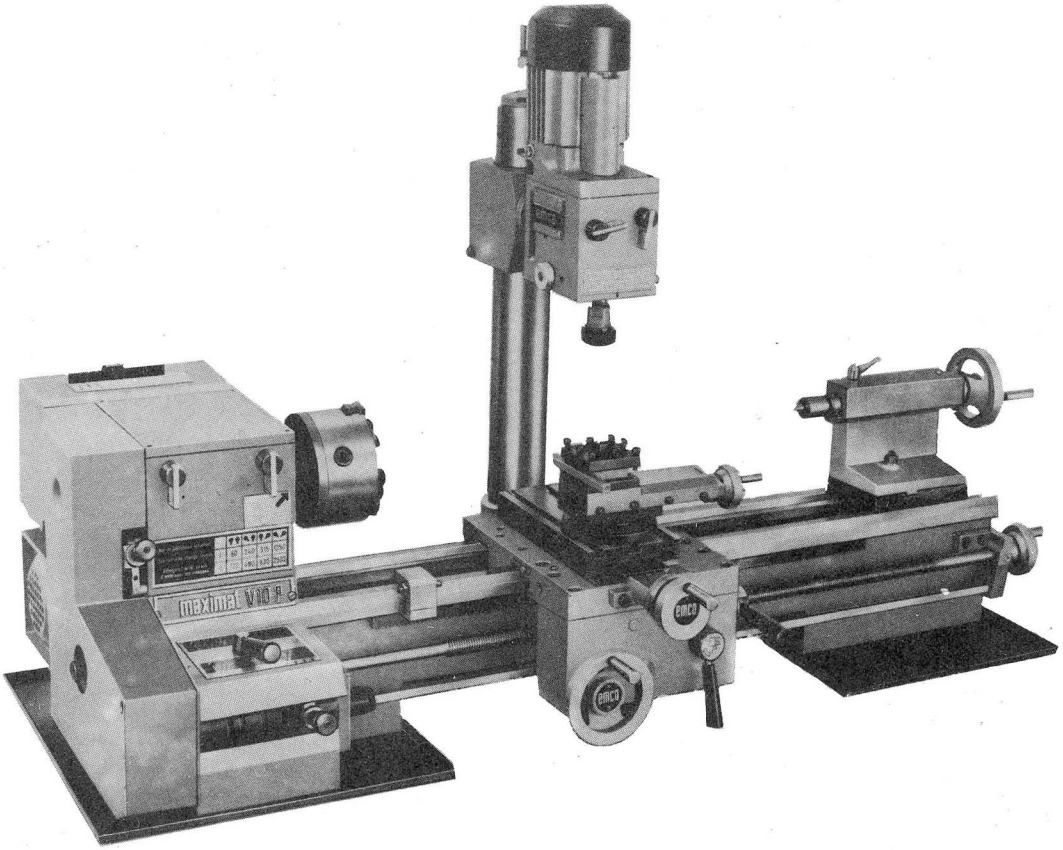


# INSTRUCTION BOOK

ENGLISCH

# F O R E W O R D

These operating instructions will familiarise you in a clear and concise manner with the EMCOMAT UNIVERSAL machine tool.
Knowledge of the basic metal cutting principles is taken for granted.

The conveniently arranged operating controls and the compact design of the machine should make it easy even for the layman to acquire the necessary knowledge and skill in practical work. However, in order to avoid failure or even damage to the machine, it is recommended that a study should be made of all the individual functions of the machine with the aid of test pieces. First study the manual and when familiar with this, start the practical work. This will avoid disappointment and damage. Many of its advantages and uses will become apparent only after some time and practice.

In order to keep the wear and tear down to a minimum, and so as to keep the initial accuracy for many years, we recommend that the machine is not operated at its maximum capacity, but is kept well within its limits, especially when in doubt.

The manual also provides information on other types (sizes) of EMCO machine tools.

# I N D E X


| | Page | |
|---|---|---|
| | Emcomat 7<br>Emcomat 7/L | Maximat V 10 |
| Uncrating the machine | 5 | 5 |
| Installing the machine | 5 | 5 |
| Preparing for operation | 5 | 5 |
| Mounting the vertical unit | 5 | 5 |
| Controls | 6 | 7 |
| Technical data of universal machines | 8 | 8 |
| Technical data of vertical unit | 9 | 9 |
| Space requirements | 9 | 10 |
| **Units** | | |
| Bed | 11 | 11 |
| Headstock | 11 | 11 |
| Norton quick-change gearbox | - | 11 |
| Drive and electrical equipment | 11 | 11 |
| Slides | 11 | 11 |
| Carriage apron | 11 | 11 |
| Tailstock | 11 | 11 |
| Flange mounting of clamping equipment | 11 | 11 |
| Instructions for flange mounting | 12 | 12 |
| **Lathe Accessories** | | |
| Universal chuck with 3 or 4 jaws | 12 | 12 |
| Independent chuck | 12 | 12 |
| Collet attachment | 12 | 12 |
| Mounting of Collet attachment | 12 | 12 |
| Quick action chuck SSF 20 Z | 13 | 13 |
| Drill chuck | 13 | 13 |
| Arbor | 13 | 13 |
| Live Centre | 13 | 13 |
| Steadies | 13 | 13 |
| Thread dial indicator | 13 | 13 |
| Change wheels for E 7 und E 7/L | 13 | - |
| Change wheels and special quadrant for Maximat V 10 | - | 13 |
| Four-tool turret | 14 | 14 |
| Case containing tools | 14 | 14 |
| Tool post grinding attachment | 14 | 14 |
| Vertical unit | 14 | 14 |
| Machine vice | 14 | 14 |
| Revolving base for the Maximat V 10 machine vice | - | 14 |
| Dividing head | 14 | 14 |
| Clamping and milling equipment for the vertical unit | 15/16 | 15/16 |
| **Operating the Emco Universal Machine and its Accessories** | | |
| Taper turning using tailstock set-over | 17 | 17 |
| Quick-acting chuck type SSF 20 Z | 17 | 17 |
| Changing collets | 18 | 18 |
| Fixed steady | 18 | 18 |

| | Page | |
|---|---|---|
| | Emcomat 7<br>Emcomat 7/L | Maximat V 10 |
| Travelling steady | 18 | 18 |
| Screw cutting on the Emcomat 7 and 7/L | 19/20 | - |
| Screw cutting on the Maximat V 10 | - | 21 |
| Using the tool post grinder | 21/22 | 21/22 |
| Vertical unit | 23/24 | 23/24 |
| Dividing head | 24/25 | 24/25 |
| Indexing chart | 26/27 | 26/27 |
| **Lubricating Diagram** | | |
| Lubricating diagram for Emcomat 7 and 7/L | 28 | - |
| Lubricating diagram for Maximat V 10 | - | 19 |
| **Bearing Adjustment** | | |
| Adjustment of workspindle bearings | 30 | 30 |
| Adjustment of longitudinal, cross and top slides | 30 | 30 |
| Adjustment of slide screw backlash | 30 | 30 |
| Cross slide screw Emcomat 7 and 7/L | 30 | - |
| Cross slide screw Maximat V 10 | - | 30 |
| Top slide screw | 31 | 31 |
| Adjustment of lead screw half-nuts Emcomat 7 and &/L | 31 | - |
| Adjustment of lead screw half-nuts Maximat V 10 | - | 31 |
| Adjustment of half-nut backlash Emcomat 7 and 7/L | 31 | - |
| Adjustment of half-nut backlash Maximat V 10 | - | 31 |
| Adjustment of backlash in vertical single nut | 31 | 31 |
| Changing the toothed belt | 32 | 32 |
| Material table for lathe | 32 | 32 |
| Material table for vertical unit | 32 | 32 |
| Carriage feeds | 33 | - |
| Feed table for lathe and vertical unit | 33 | 33 |
| Change-gear table for inch threads, Maximat V 10 | - | 34 |
| Table for module and metric threads or feeds | - | 35 |
| Table for machine with metric leadscrew Emcomat 7 and 7/L | 36 | - |
| Table for machine with English leadscrew | | |
| Wiring diagram for single phase motor | 37 | 37 |
| Wiring diagram for three phase motor | 37 | 37 |
| Connection diagram for threee phase vertical unit | 38 | 38 |
| Connection diagram for A.C. vertical unit | 38 | 38 |

## UNCRATING THE MACHINE

The EMCOMAT 7 will be delivered packed in a special shipping case containing in addition to the fully assembled machine all parts of the basic equipment. To prevent it from shifting inside the case the EMCOMAT 7 is fastened to the bottom of the case with four locking bolts.

## SETTING UP OF THE MACHINE

The machine should be mounted with its bearing surfaces absolutely level on the base to prevent any distortion of the bed when screwed down.

Our floor stand steel cabinet with its chip tray and the tool cupboard is particularly suitable. The steel cabinet is of a special design ensuring that the bed with its two bearing surfaces can be snugly screwed on to the frame of the steel cabinet pedestal.

## PREPARATION FOR OPERATION

Due to the large variety of socket design, the Emcomat will be supplied with free cable ends, i.e. without plugs. Use earthed plugs only ! The yellow-green lead is the earth wire.
When using three phase induction motors, watch the direction of rotation. If the motor runs in the wrong direction phase 2 and phase 3 must be interchanged.
Before using the machine, remove the protecting oil film, which has been applied to all bright surfaces, with paraffin. (Remove the solvent and oil residue thoroughly with a clean cloth.) Now oil all slide ways with a good quality acid-free oil. Fill the headstock gear box with SAE 10 oil. (Also the Norton box on the Maximat 10.) (See lubrication diagram.)

## MOUNTING THE VERTICAL UNIT

The Vertical Unit mounts to the rear of the lathe bed with four fastening bolts. Check with try square the accuracy of the angle (refer to sketch). The electric connection of the vertical unit motor is to be provided according to the connection diagram (page 27).

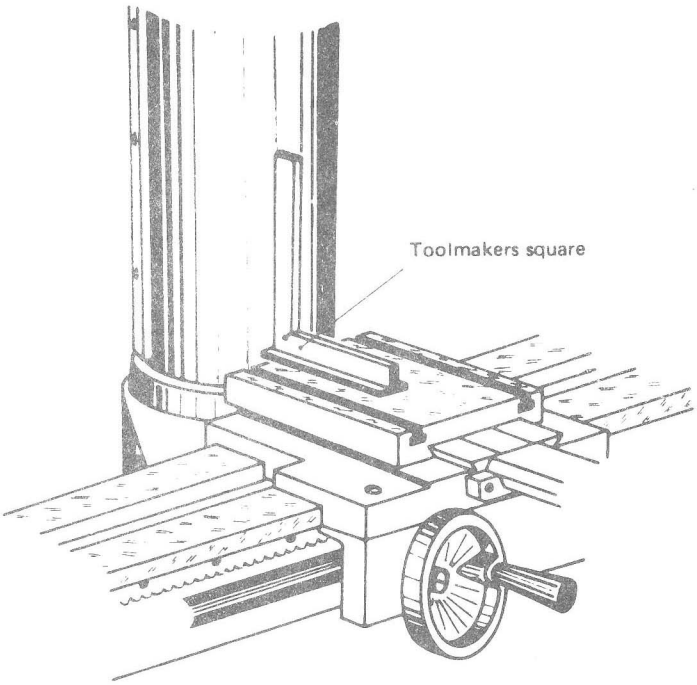

# CONTROLS
## Emcomat 7
## Emcomat 7/L

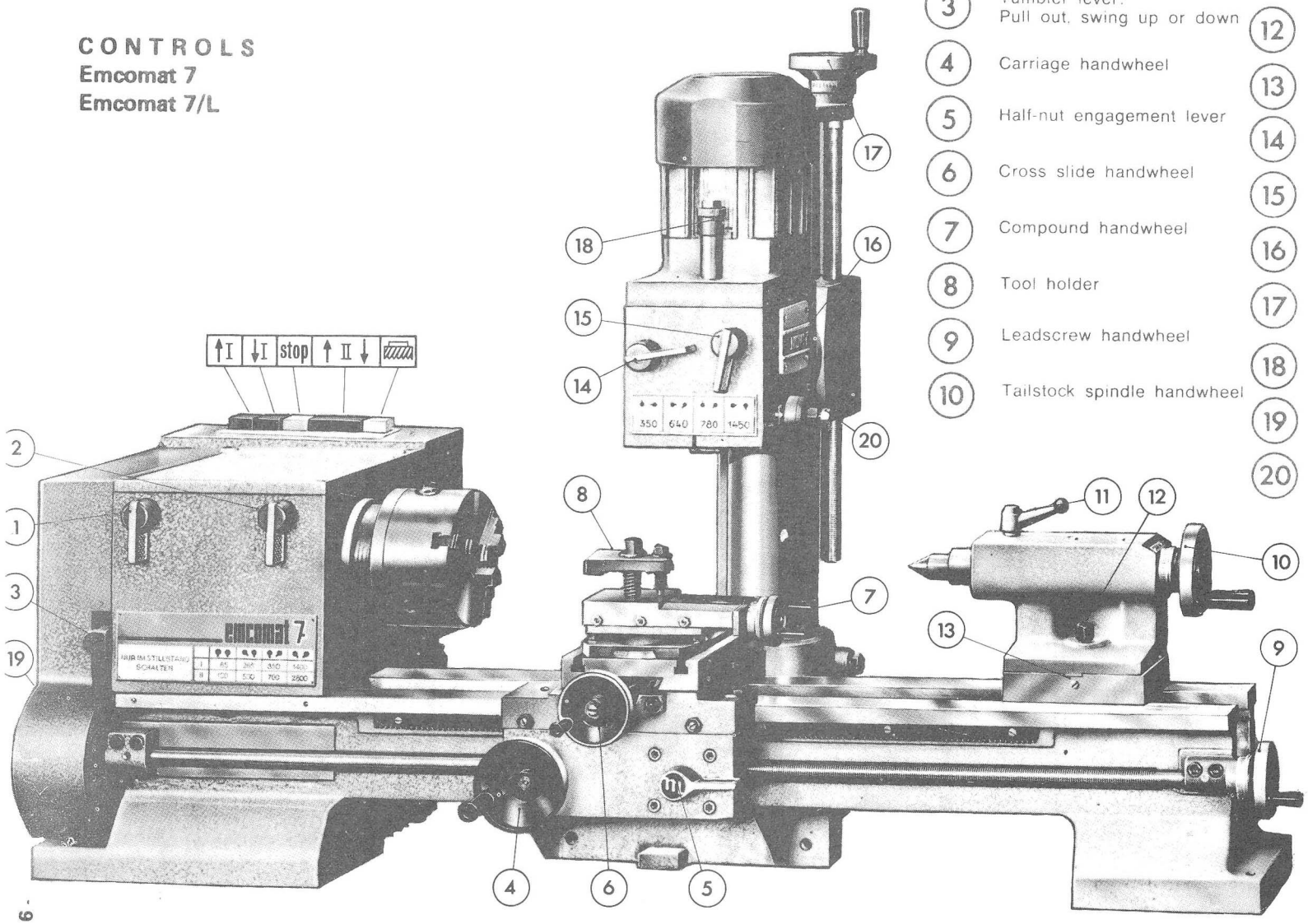


1 Speed Selection Levers:* DO NOT CHANGE SPEEDS WITH MACHINE RUNNING!

2 Speed Selection Levers:* DO NOT CHANGE SPEEDS WITH MACHINE RUNNING!

3 Tumbler lever: Pull out, swing up or down

4 Carriage handwheel

5 Half-nut engagement lever

6 Cross slide handwheel

7 Compound handwheel

8 Tool holder

9 Leadscrew handwheel

10 Tailstock spindle handwheel

11 Tailstock spindle lock

12 Tailstock lock

13 Tailstock set-over adjustment screw

14 SPEED SELECTION LEVERS:* DO NOT CHANGE SPEEDS WITH MACHINE RUNNING.

15 SPEED SELECTION LEVERS:* DO NOT CHANGE SPEEDS WITH MACHINE RUNNING.

16 Tilt angle adjustment of vertical head

17 Vertical leadscrew handwheel

18 Tool ejection nut

19 Feed selection knob — should be engaged during operation

20 Drill press pinion and depth stop

**IMPORTANT!**

All control levers and knobs must always be completely engaged.
Do not change lathe or milling spindle speeds when machine is running!

* Disengage lever — swing — with light pressure, find engagement point.

# CONTROLS
## Maximat V 10

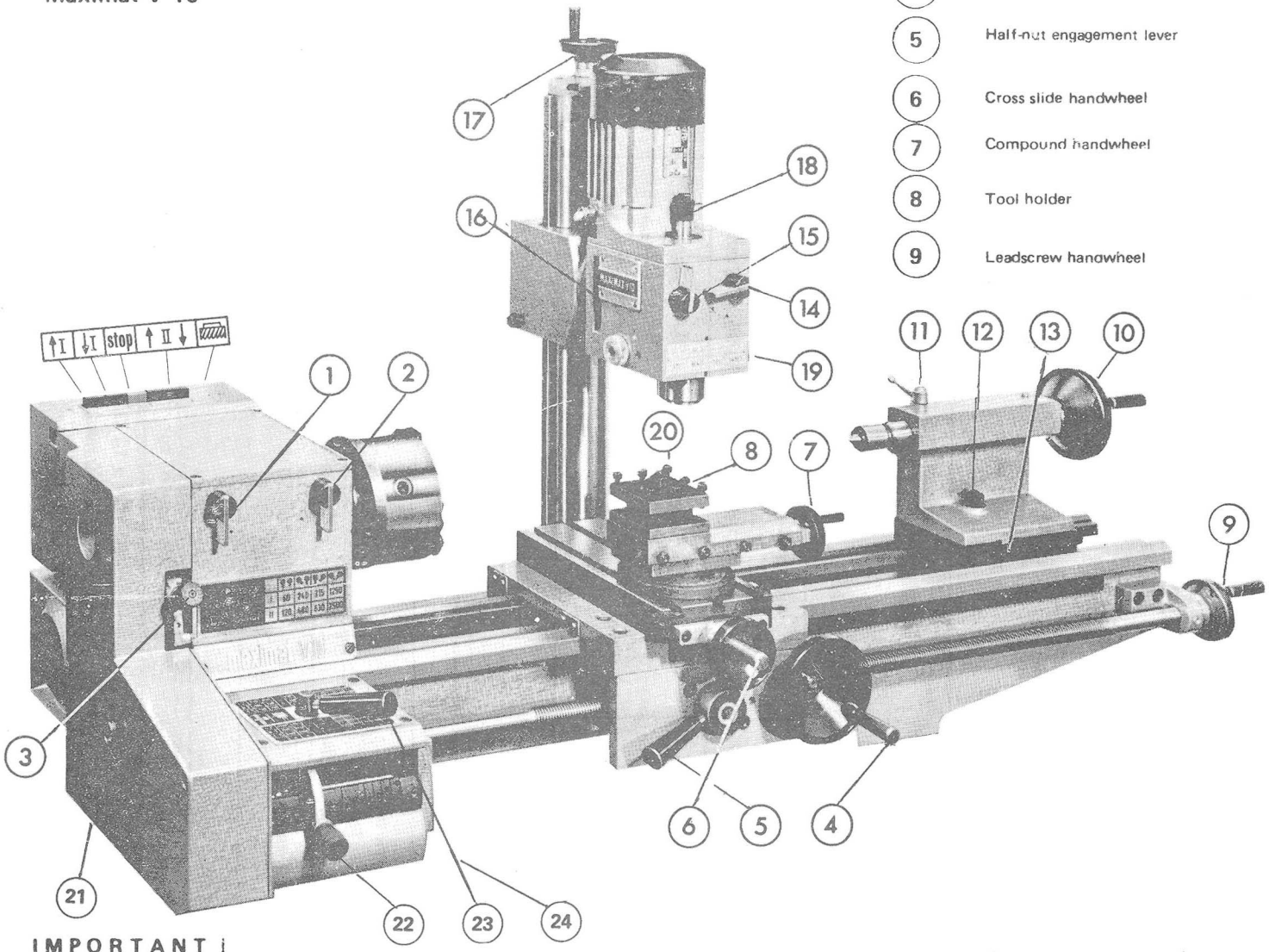


1 Speed Selection Levers: *
2 DO NOT CHANGE SPEEDS WITH MACHINE RUNNING !

3 Tumbler lever: Pull out, swing up or down

4 Carriage handwheel

5 Half-nut engagement lever

6 Cross slide handwheel

7 Compound handwheel

8 Tool holder

9 Leadscrew handwheel

10 Tailstock spindle handwheel

11 Tailstock quill clamping lever

12 Tailstock clamping

13 Tailstock set-over screw, front

14 Lever for the selection of vertical spindle speeds
15 (engage only when machine at rest)

16 Tilt angle adjustment of vertical head

17 Vertical leadscrew handwheel

18 Tool ejection nut

19 Drive pinion and depth stop for vertical spindle adjustment

20 Mounting of vertical column

21 Push and pull knob for sliding gear (screw cutting) "Change only when at rest"

22 Arm
23 Lever
Norton box for the selection of individual threads or feeds (change only when machine is stationary)

24 Norton box oil drain plug

**IMPORTANT !**

All control levers and knobs must always be completely engaged.
Do not change lathe or milling spindle speeds when machine is running !

* Disengage lever – swing – with light pressure find engagement point.

## TECHNICAL DATA OF THE UNIVERSAL MACHINE

| | Emcomat 7 | Emcomat 7/L | Maximat V 10 |
|---|---|---|---|
| Centre distance | 17 1/2" (450 mm) | 23 5/8" (600 mm) | 25 1/2" (650 mm) |
| Centre height | 3 1/2" ( 90 mm) | 3 1/2" ( 90 mm) | 5" (127 mm) |
| Swing over cross slide | 4 1/8" (106 mm) | 4 1/8" (106 mm) | 5 5/8" (145 mm) |
| Headstock:<br>Spindle nose | EM 39<br>DIN 800 | EM 39<br>DIN 800 | EM 39<br>DIN 800 |
| Morse taper | No.3 | No.3 | No.3 |
| Spindle bore | 25/32" (20 mm) | 25/32" (20 mm) | 25/32" (20 mm) |
| Taper for collets | L 20<br>40 - 826 | L 20<br>40 - 826 | L 20<br>40 - 826 |
| Spindle bearings | Adjustable precision taper roller bearings | Adjustable precision taper roller bearings | Adjustable precision taper roller bearings |
| Spindle speeds | 65-130-265-350-530-700-1400 2800 R.P.M. | 65-130-265-350-530-700-1400-2800 R.P.M. | 60-120-240-315-480-630-1250-2500 R.P.M. |
| Leadscrew | 15 dia. x 1.5 mm | 15 dia. x 1.5 mm | 20 dia. x 3 mm |
| Feeds | with push and pull knob 0,002"/0,0047" (0.05, 0.12 mm)/Rev. | with push and pull knob 0,002"/0,0047" (0.05, 0.12 mm)/Rev. | 24 feeds from 0,002" to 0,014" or 0.028; 0.444 mm/Rev. |
| Thread pitches | 0.4 - 3 mm<br>8-80 T.P.I.<br>0.2 - 1<br>module | 0.4 - 3 mm<br>8-80 T.P.I.<br>0.2 - 1<br>module | Norton box<br>0.125 - 4 mm<br>Change gears<br>6-120 T.P.I.<br>0.15-2 module |
| Dia. of tailstock barrel | 1,023" (26 mm) | 1,023" (26 mm) | 1,180" (30 mm) |
| Traverse of barrel | 1 9/16" (40 mm) | 1 9/16" (40 mm) | 3 1/8" (80 mm) |
| Morse taper | No.2 | No.2 | No.2 |
| Tailstock set-over<br>forwards | 12 mm | 12 mm | 12.5 mm |
| backwards | 8 mm | 8 mm | 12.5 mm |
| Motor speeds | 1400/2800 R.P.M. | 1400/2800 R.P.M. | 1400/2800 R.P.M. |
| Power | 0.4/0.55 H.P. | 0.4/0.55 H.P. | 0.4/0.55 H.P. |
| Weight | 154 lbs. (70 kg) | 163 lbs. (74 kg) | 265 lbs. (120 kg) |
| Floor area | 35 1/2" x 13 3/4" (900 x 350 mm) | 42 1/2" x 13 3/4" 1080 x 350 mm) | 50" x 18 7/8" 1270 x 480 mm) |

| | Emcomat 7 | Emcomat 7/L | Maximat V 10 |
|---|---|---|---|
| Maximum height between cross slide and spindle | 9 3/8" (240 mm) | 9 3/8" (240 mm) | 12" (305 mm) |
| Centre line spindle to column reach | 5 11/16" (145 mm) | 5 11/16" (145 mm) | 5 11/16" (145 mm) |
| Drilling stroke | 1 9/16" ( 40 mm) | 1 9/16" ( 40 mm) | 1 9/16" ( 40 mm) |
| Spindle taper | No.2 | No.2 | No,2 |
| Spindle speeds | 350-640-780-1450 | 350-640-780-1450 | 350-640-780-1450 |
| Motor rating | 0.14 H.P. | 0.14 H.P. | 0.20 H.P. |
| Weight | 33 kg | 33 kg | 36 kg |

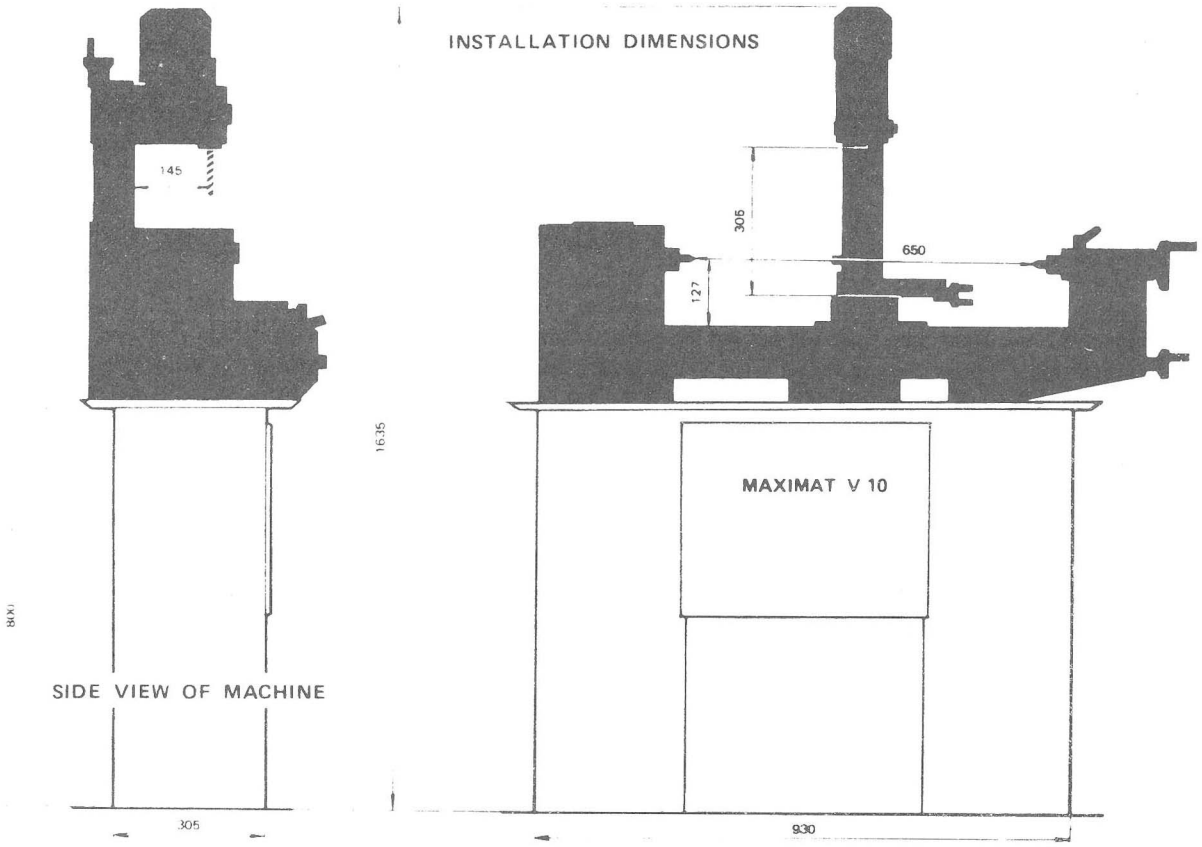


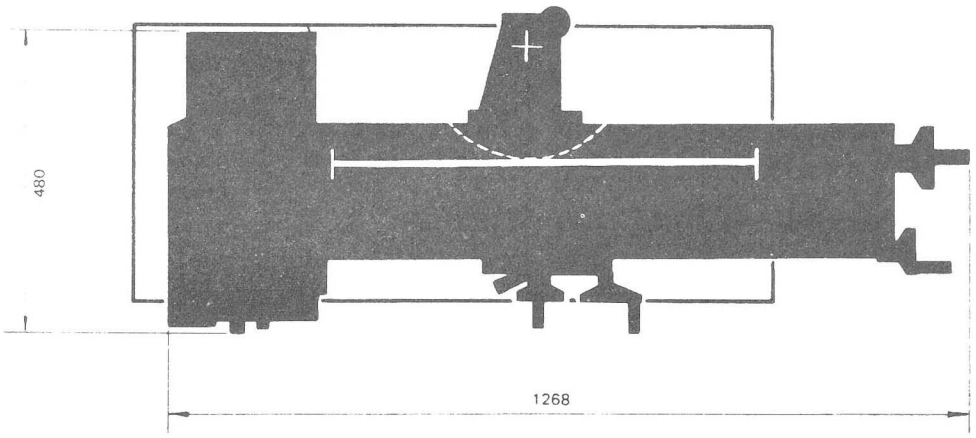

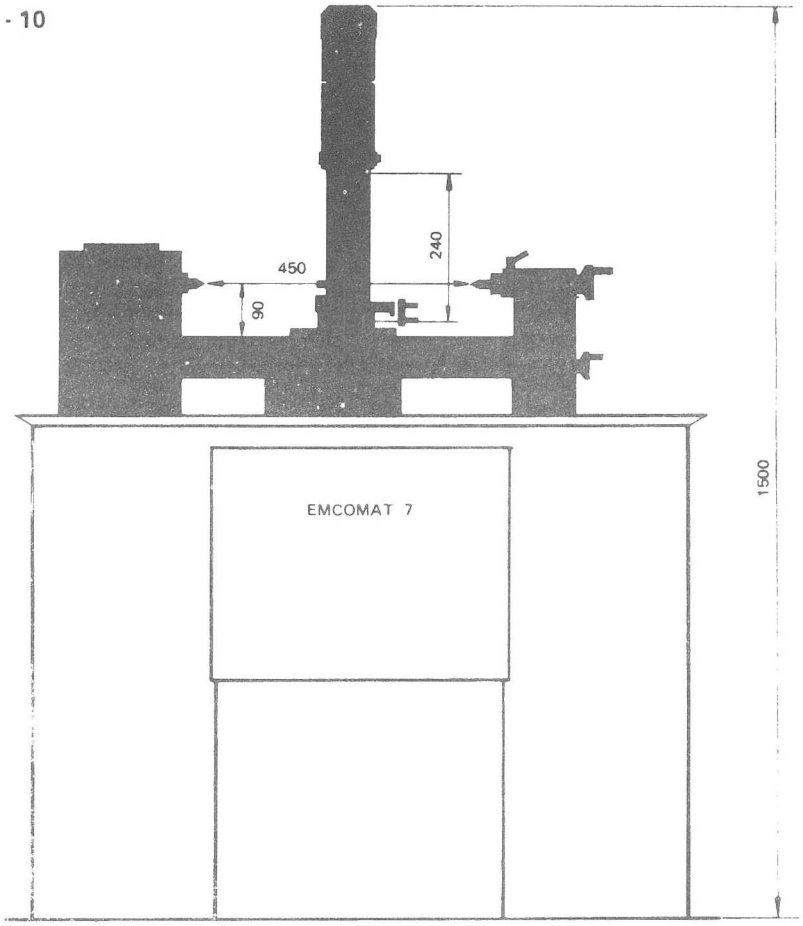
450
240
90
1500
EMCOMAT 7

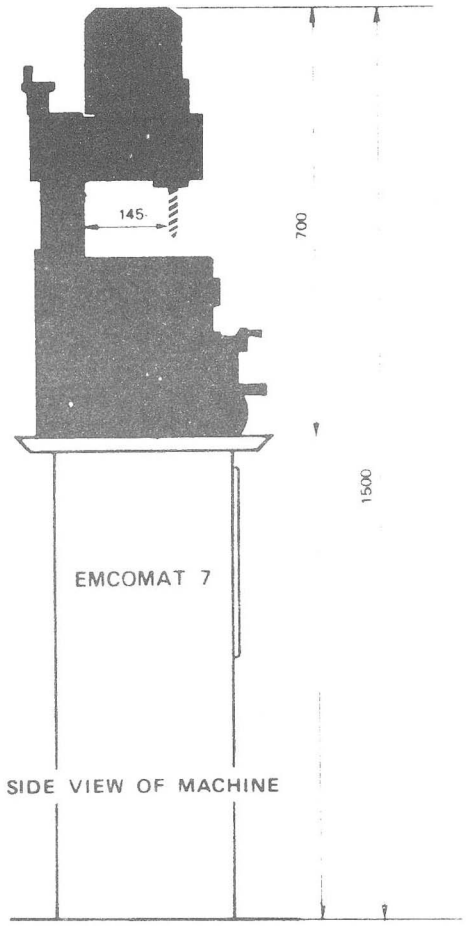
145
700
1500
EMCOMAT 7
SIDE VIEW OF MACHINE

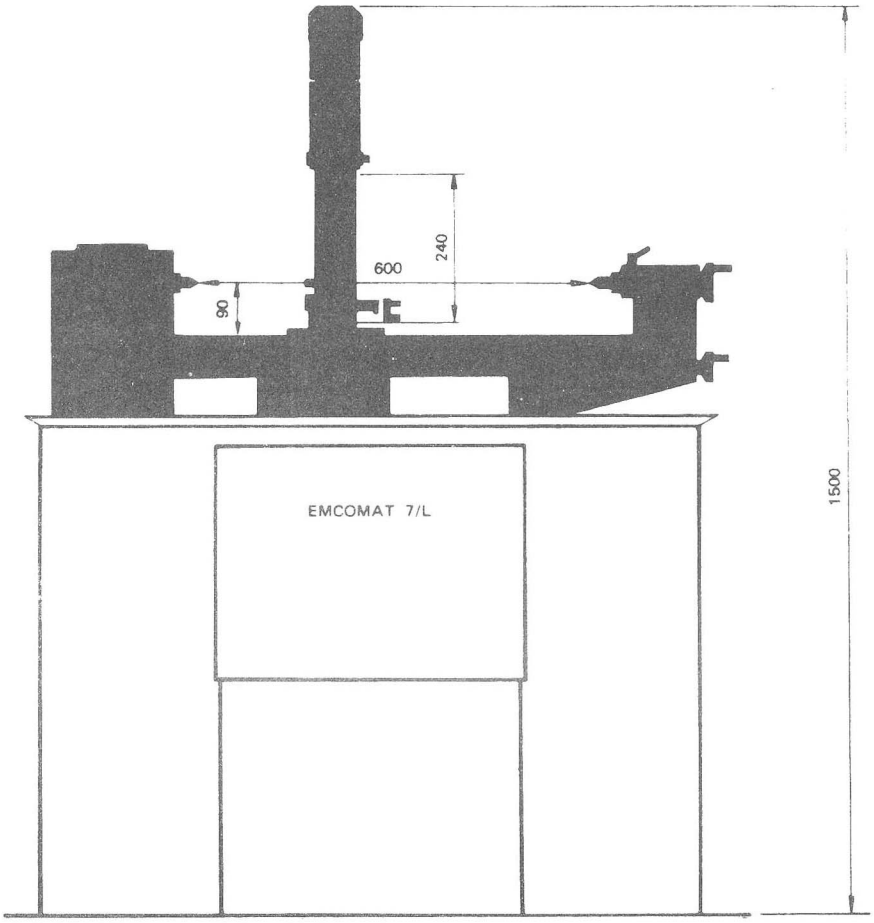
600
240
90
1500
EMCOMAT 7/L

# UNITS

## LATHE BED

The lathe bed with its ground guide ways is diagonally ribbed and made of high grade cast iron. The rack for the saddle traverse and the lead screw are located at the front.

## HEADSTOCK

The hardened and ground main spindle runs in 2 precision taper roller bearings. The spindle is bore 20 mm. The spindle nose is provided with a No.3. Morsetaper and a taper for type L 20 collets. The headstock spindle gears are oil bath lubricated.

## NORTON QUICK CHANGE BOX (MAXIMAT V 10)

The Norton box is a 24 stage gearbox giving 24 feeds and 24 speeds. The speeds and feeds are selected with a lever and swingarm.

## DRIVE AND ELECTRICAL EQUIPMENT

The drive is taken from a single-phased or from a three-phased A.C.motor built on to the rear of the lathe bed. The power is transmitted from the motor shaft by a timing belt to the back gear shaft and from there through geared driving pinions to the main lathe spindle. All electric parts (push button control unit, capacitors, etc.) are factory wired and totally in an E-housing located at the rear of the headstock casing.

## SLIDES

The sturdy saddle carries the cross slide. Equipment for use in conjunction with the vertical unit can be fitted to the cross slide. The top slide is arranged on the cross slide and can swivel in either direction. All slide gibs are adjustable and slides can be locked in any position with the aid of clamping screws. The graduated index collars on the slide hand wheels permit accurate adjustments and readings.

## CARRIAGE APRON

The apron is bolted to the saddle and carries the conveniently arranged saddle traverse handwheel and the half-nut closing lever.

## TAILSTOCK

The tailstock is of a compact design. The heavy duty tailstock barrel is provided with a scale graduated in millimeters and has a No.2 internal morse taper. The handwheel is provided with a graduated adjustable index collar for precision work.

## FLANGE-MOUNTING OF THE CLAMPING TOOLS

All clamping tools are fitted to the lathe (main) spindle by means of an adaptor flange. The adaptor flange provides the possibility of obtaining the most accurate seat for the clamping tool thereby ensuring the optimum accuracy of true running.

As the adaptor flanges are finish-machined on the side facing the spindle nose it is necessary to turn them for snug fit only on the side facing the chuck. An adaptor flange which has been flanged on to a particular clamping tool should be left fitted to it and not used for any other tool.

The instruction for flange-mounting applies to the following clamping tools of the EMCOMAT 7:

a) Lathe Chuck; Universal 3-jaw and 4-jaw Chucks and the 4-jaw independent Chuck.
b) Quick Action Collet Chuck.

## OPERATING INSTRUCTION FOR FLANGE-MOUNTING

Both the spindle nose and the threaded flange adaptor must be thoroughly cleansed of adhering chips (borings or millings). Then proceed with screwing the flange on to the spindle nose taking care that the flange bears snugly to the face of the spindle nose. Now turn a shoulder of approximately 2 mm depth (but not deeper than 2 1/2 mm).

This diameter must conform exactly to the centering diameter of the clamping tool, and this diameter must be turned so accurately, that the chuck can be mounted without the use of force, although free from play and firmly adhering. Then take off another fine cutting from the contact surface of the above said shoulder, thereby providing a clean and smooth bearing surface for the lathe chuck. Clean thoroughly the centering rim of the clamping implement. Lubricate lightly the fitting surface and screw the clamping tool on to the flange with location screws.

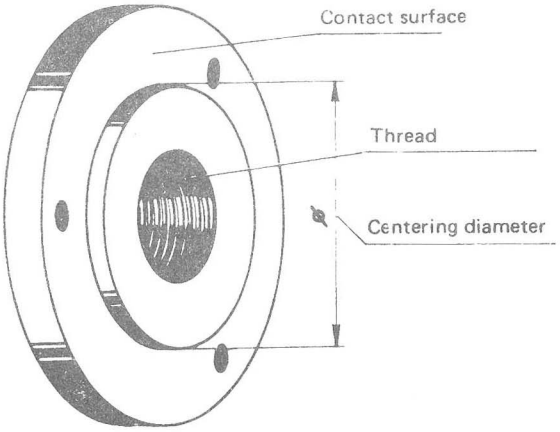


# ACCESSORIES FOR THE EMCOMAT 7

## UNIVERSAL LATHE CHUCK OF 3-JAW OR 4-JAW DESIGN

With these Universal Chucks cylindrical or symmetrically profiled work pieces (round stock, triangular, square, hexagonal, octagonal or twelve-cornered stock) can be clamped.

Note: New lathe chucks have very tightly fitting jaws. This is an imperative necessity to ensure an accurate clamping and a long service life. Due to the repeated opening and closing the jaws adjust themselves automatically and their operation becomes adequately smooth. For greasing we recommend Molykote Paste G.

## 4-JAW INDEPENDENT CHUCK

This special chuck has 4 independently adjustable chuck jaws; these permit the holding of assymmetrical components and enable the accurate setting up of cylindrical components.

## THE COLLET ATTACHMENT

Consists of cap nut and draw tube.

## MOUNTING OF THE COLLET ATTACHMENT

Screw cap nut onto spindle nose and insert the Schaublin Type L 20 collet (special design) into the spindle.

(Note the correct position of slot.) Push the draw tube into the spindle from the left-hand side and screw it into the collet.
The collets must NOT be used for sizes other than those for which they are intended.

## QUICK ACTION CHUCK SSF 20 Z

This chuck operates without stopping the spindle and is used for batch production. Rubber-flex collets ranging from 0 to 20 mm in steps from 2 to 20 mm are available. The clamping range of these collets is 2 mm. The assembly and operation of the quick action chuck is described on page 17.

## THE DRILL CHUCK

With its 3 self centring jaws, it is used for holding centre drills and twist drills.

## ARBOR

The arbor is necessary to hold the drill chuck in the tailstock or vertical unit spindle and it is provided with a No.2 morse taper.

## LIVE CENTRE

The live centre is mounted on 3 ball bearings and is recommended for turning at speeds in excess of 500 R.P.M.

## STEADIES

The steadies are used when turning slender shafts to prevent chatter. The fixed steady is bolted to the bed and the travelling steady is bolted to the saddle. Their assembly on the machine and their correct use is described on page 18.

## THE THREAD DIAL INDICATOR

The thread dial indicator is provided as an aid in screw cutting and is predominantly used on machines with inch system leadscrews.

The indicator is fitted to the right hand side of the apron with a hexagon headed screw and pushed forward to engage with the lead screw. The zero mark on the body is now marked to coincide with the dial.

When screw cutting it is essential that the marks on body and dial coincide otherwise split threads will result.

## CHANGE GEARS FOR THE EMCOMAT 7 AND EMCOMAT 7 / L

The set consists of 9 gears and a quadrant pin; with this set of gears metric threads ranging from 0.4 to 3 mm pitch, module threads from 0.2 to 1 module and English threads from 8 to 80 T.P.I. can be cut.

A detailed description of gear arrangements and screw cutting is given on page 19 - 20.

## CHANGE GEARS AND SPECIAL QUADRANT FOR MAXIMAT V 10

This equipment permits the cutting of English threads from 6 to 120 T.P.I. and module threads of 0.15 to 2 module on Maximat V 10.

## THE FOUR-TOOL TURRET



The four-tool turret is mounted on the top slide in place of the tool clamp and permits simultaneous clamping of 4 tools. Any tool can be swung into the correct position merely by unlocking the turret.

## TOOL BIT BOX

This box contains 6 ground tools:
1 Roughing Tool (to take preparatory cuts)
1 Righthand Side Tool (for finish turning)
1 Cutting-off or Parting Tool (for the grooving and slotting of nuts)
1 Inside Turning Tool (for borings to be made)
1 External Thread Cutting Tool — 60° thread angle
1 Internal Thread Cutting Tool — 60° thread angle

## TOOL POST GRINDING ATTACHMENT

This attachment is an integral complete grinding machine with its own driving motor (150 W output), and mounts on the top slide in place of the toolholder. It lends itself for both external and internal grinding. The grinding spindle revolves on precision bearings; therefore hitting these precision parts ought to be avoided as any blow reduces their accuracy.
Shifting the V-belt allows for three speeds, viz. 4500, 8000 and 12.000 r.p.m.
The instruction for operating with the Tool Post Grinding Attachment will be found on page 21, 22.

## THE VERTICAL UNIT

The vertical unit and vertical head can be locked in any position and can be rotated through 360° horizontally and vertically.
The vertical spindle is provided with a No.2 morse taper. The spindle quill can be locked in position and is provided with a depth stop. (Drilling stroke 40 mm.) Four spindle speeds are available (350 - 640 - 780 - 1450 r.p.m.) The saddle feeds can be used for milling.
The instruction for the mounting and removal of tools and the adjustment of the depth stop will be found on page 23 - 24.

## THE VICE OF THE MACHINE

The Vice is of robust design; it has jaws of 60 mm (2 3/8") width and an opening or gripping capacity of 60 mm (2 3/8"). This vice is an indispensable clamping device for Vertical Spindle operations. It is secured to the cross slide by means of slotted bolts.

Beware of hitting the square spanner when clamping work pieces. The gripping power is quite adequate with manual operation by using the spanner.

## ROTATING BASE FOR THE MAXIMAT V 10 MACHINE VICE

This accessory enables the user to rotate the machine vice in the horizontal plane through 360° and lock it in any position.

## THE DIVIDING HEAD

The dividing head is suitable for direct or indirect dividing or for graduation indexing To check the indexing, the circular table is provided with graduations from 0 - 360°
Each dividing head is provided with 3 dividing plates. Two plates have 3 circles of holes (27 - 34 - 42, 33 - 36 - 39) and one plate has 2 circles (38 - 40). Thus 8 circles of holes are available. Details of the construction and instructions for use can be found on page 24 - 25.

# CLAMPING AND MILLING TOOLS FOR THE VERTICAL UNIT

## COLLET HOLDER FOR DOUBLE-CONICAL COLLETS OF TYPE E 25

The Collet Holder is clamped with the reducing screw and the tightening screw in the vertical spindle. The collet required for the particular job can be set up by unscrewing the cap nut. The collets must not be used for any other diameter than that indicated on the collet.

The Collet Holder can be removed by means of the spring loaded ejection pin and the withdrawal nut.

## MILLING ARBOR, REFERENCE: ORDER No. 7630

This fixture will be located in the Vertical Spindle in exactly the same manner as the collet holder.

On this milling arbor are clamped the gearwheel cutters or side milling cutters. As the various milling tools are not always of the identical width milling arbor collars are used for compensating these differences.

Slot milling cutters, end milling cutters or profile milling cutters are clamped in the collet holder device with the appropriate collet of Type E 25.

If a work piece has to be machined it must be firmly held in a suitable clamping device. For milling operations the work can be clamped in the vice, on the dividing head attachment or direct on the cross slide. For the latter method our stepped clamping shoes of special design (ref.Order No.7650) are particularly suitable as they can always be adequately adapted to the height of the work piece.

Milling Arbor with Morse Taper No 2 (MT2) and draw-in screw thread M 10, for milling cutters with locating bore of 16 mm ref. Order No.7630

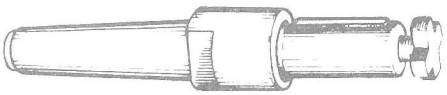

Spacers, hardened and ground, bore 16 mm:

| | |
|---|---|
| 4 mm height | ref. Order No.7631/4 |
| 6 mm height | ref. Order No.7631/6 |
| 8 mm height | ref. Order No.7631/8 |
| 12 mm height | ref. Order No.7631/12 |

Heaving Duty Shank Type Milling Cutter with roughing teeth, MT2, tightening thread M 10, 15 mm dia., heavy duty high-speed steel ref. Order No. 7641

Heavy Duty Shank Type Milling Cutter with roughing teeth, cylindrical shank 8 mm dia.

End Milling Cutter with cylindr.shank, heavy duty high-speed steel

| | |
|---|---|
| 3 mm dia. | ref. Order No.7643/3 |
| 4 mm dia. | ref. Order No.7643/4 |
| 5 mm dia. | ref. Order No.7643/5 |
| 6 mm dia. | ref. Order No.7643/6 |

Angle Milling Cutter with cylindr.shank, 12 mm dia. 60° x 16 mm dia., heavy duty high-speed steel ref. Order No.7644

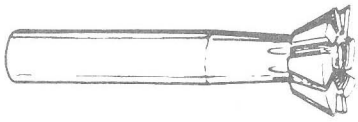

Milling Cutter for T-Slots, with cylindr. shank 10 mm dia., heavy duty high-speed steel,

| | |
|---|---|
| for slots 12,5 mm x 8 mm | ref. Order No.7645/12,5 |
| for slots 16 x 8 mm | ref. Order No.7645/16 |

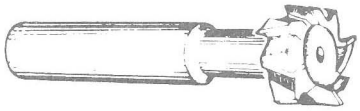

Gear Milling Cutter, relieved, for 20° pressure angle, bore 16 mm, heavy duty high-speed steel

| | |
|---|---|
| Module 0,5, external dia. 40 mm | ref. Order No.7646/1-8 |
| Module 1, external dia. 50 mm | ref. Order No.7647/1-8 |
| Module 1,25 external dia. 50 mm | ref. Order No.7648/1-8 |

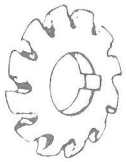

(When placing order, please, state the reference number of the Milling Cutter in accordance with the following table):

| ref.no. of cutter: | 1 | 2 | 3 | 4 | 5 | 6 | 7 | 8 |
|---|---|---|---|---|---|---|---|---|
| for number of teeth: | 12-13 | 14-16 | 17-20 | 21-25 | 26-34 | 35-54 | 55-134 | 135-00 |

Side Milling Cutter, staggered tooth system, bore 16 mm, 5 mm width, external dia. 35 mm, heavy duty high-speed steel ref. Order No.7649

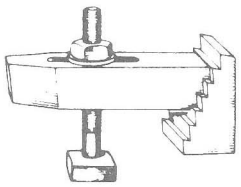

Stepped Clamping Shoe complete, with clamping bolt, clamping capacity 0-20 mm ref. Order No.7650

Circular Saw Blade, fine pitched toothed, bore 16 mm; external dia. 60 mm; width 0,8 mm. High speed steel ref. Order No.1231

# OPERATING THE EMCO UNIVERSAL MACHINE AND ITS ACCESSORIES

## TAPER TURNING USING TAILSTOCK SET-OVER

Work up to a side angle of $5^{o}$ can be turned by setting over the tailstock (the angle depends on the length of the work piece.) If the smallest diameter of the taper is on the tailstock end, the tailstock must be moved towards the lead screw.

## OPERATING INSTRUCTIONS

For item numbers see relevant page in manual.

To set over the tailstock, slacken the 13 A/F locking screw Part 12. Screw out the front adjusting screw Part 13. Screw in the adjusting screw at the rear of the tailstock until the required taper has been obtained. Tighten the front adjusting screw to lock the tailstock to the base.

It is essential that the work be carried between centres. The workpiece is driven by the lathe carrier and driving plate.

After the completion of the taper turning operation, the tailstock is returned to its original position. The zero position of the tailstock is checked by turning a test piece with constant adjustment until the test piece is absolutely cylindrical.

## QUICK ACTION CHUCK TYPES SSF 20 Z

This chucking attachment is mainly used for production batches. Its advantage lies in the fact that the bar stock up to 20 mm dia. can be clamped and released whilst the machine is running.

The rubber flex collets have a clamping range of max. 2 mm minus. This means that a 10 mm collet will clamp 8 mm bar. The clamping range of steel collets, which can also be used, is only 0.5 mm. The actual clamping size is adjusted with the front cap nut which operates on the ratchet principle. The quick-action chuck has been designed for continuous operation and is adequately protected against the penetration of dirt. The quick-acting chuck is mounted on a flange which is similar to the ordinary chuck and faced and turned to fit the chuck location spigot.

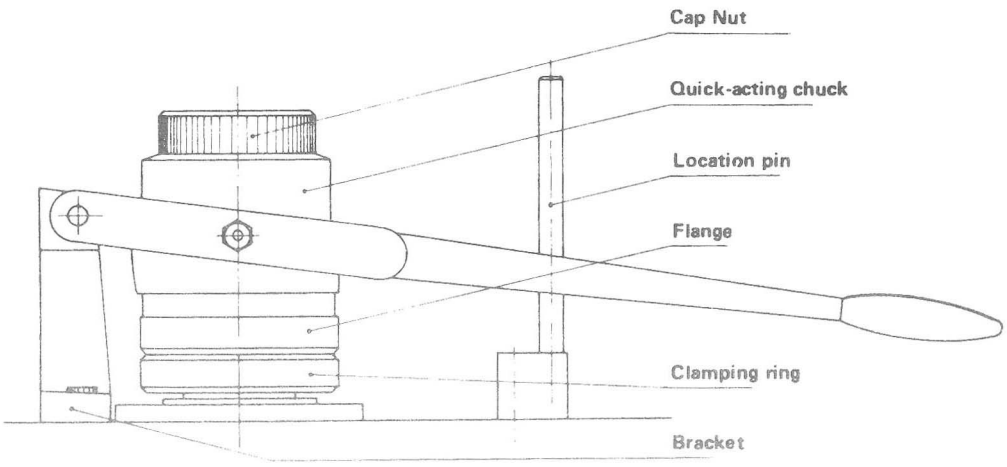


Quick-acting chuck Type SSF 20 Z
for lathe type Emcomat 7
Emcomat 7/L
Maximat V 10

The bracket supplied with the chuck must be fitted in such a way that the open end of the slot faces the spindle nose (tapped holes behind the spindle nose).
Screw in and fix location pin (tapped hole in front of spindle nosw). Screw chuck with back plate onto spindle nose znd lock with clamp ring; simultaneously insert lever into bracket and over location pin.

## REPLACING THE COLLET

To mount the new collet unscrew the cap nut and insert the new collet in cleaned condition, screw on the cap nut and adjust for the given chucking capacity.

The sliding sleeve requires regular lubrication; apply a good quality slide bearing oil through the lubricating hole provided in the locating screw. An excess of oil is a disadvantage as it would be splashed around during the running of the machine.

When replacing collets be sure to clean all locating parts very carefully ! Do not lubricate in excess ! Use no force when dismantling and reassembling the chuck !

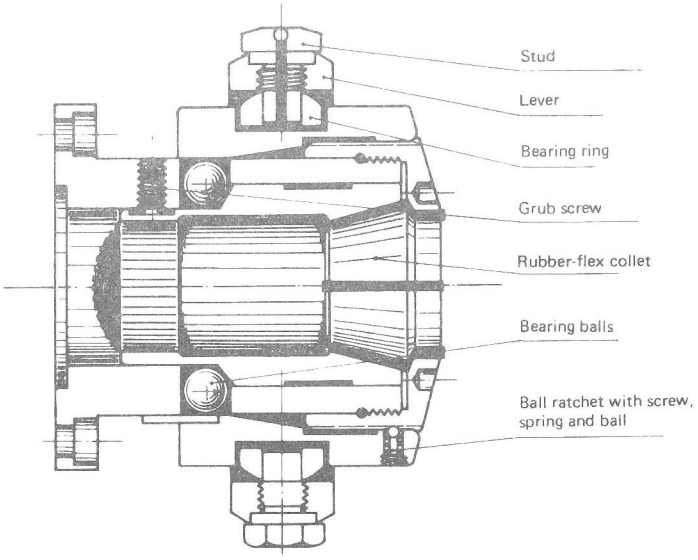


## STEADY REST

The Steady Rest or Stay serves predominantly as a support for shafts on the free tailstock end. For many operations the tailstock cannot be used as it is in the way of the turning tool or the drilling tool, and therefore must be removed from the machine. It is then the Steady Rest which functions as end support ensuring a chatter-free running of the machine. The Steady Rest is mounted on the bedway and secured from below in the desired position by means of a locking plate. The sliding centers require continuous lubrication at the contact points with the workpiece to prevent their premature wear. When applying the jaws to the workpiece care should be taken not to press it out of its centre position lest it get loose in the lathe chuck and damaged by the lathe chuck jaws.

## APPLYING THE SLIDING JAWS TO THE WORKPIECE

1. Slacken the 3 laterally located hexagonal nuts (SW 10)
2. Unscrew the knurled screws and advance the sliding by hand. Open the sliding jaws sufficiently wide until the steady rest can be moved with its sliding jaws over the workpiece. Secure the steady rest in this position.
3. By turning the knurled screws into position the sliding jaws can be applied to the workpiece. They must be applied free of play but must not seize. Lubricate the sliding points with machine oil.
4. When after prolonged operating time the jaws show wear, the individual sliding jaw centers can be remilled or filed over.

## FOLLOWER REST

The Follower Rest is mounted on the longitudinal slide, and thus follows the movement of the turning tool. As the centre part of the follower rest is always level with the height of the tool only two sliding jaws are required whereas the place of the third is taken by the turning tool.
The follow rest is used for turning operations on long, slender workpieces; it prevents "springing" of the work piece under the pressure of the turning tool.

The sliding centers are set similarly to those of the steady rest: free of play but not seizing. They should be adequately lubricated during the operation.

## INSTRUCTION FOR THE SET UP OF THE CHANGE GEAR COMBINATION AND THE THREAD CUTTING

The necessary equipment comprises 12 change wheels, three of which are already mounted on the machine. With these change metric threads ranging from 0,4 to 3 millimetres pitch, module threads ranging from M 0,2 to M 1, and threads based on inch system ranging from 80 threads/inch to 8 thread/inch can be cut.

For cutting right hand threads the saddle must move in direction of the headstock (normal direction of rotating the workpiece with the half-nut in closed condition).

When mounting the change gears and the shear pins take care that the individual change gears will accurately mesh but without undue pressure at the root of the tooth. The correct adjustment will be facilitated by pressing a strip of paper between the teeth, by ensuring the snug position of the gears and firmly tightening the shear pins. After removal of the strip of paper the teeth will have the correct amount of play.

As a principle during the thread cutting operation the half-nut should not be opened from beginning to the completion of the thread so as to ensure that the turning tool will always return into its correct initial position.

An exception is the cutting of mextric threads, which are incorporated in the lead screw pitch. In this case the half-nut can be opened after each cutting operation and the saddle returned into the starting position by means of the handwheel, i.e. 1.5 - 0.75 - 0.5.

The following instruction and the thread cutting tables relate to the 1,5 mm pitch lead spindle. The Thread Cutting Table (refer to page 36) is likewise provided on the inside of the feed gear box cover.

For machines with inch system based lead spindle the operating method remains the same, except for a change in the gear combination. (Thread Cutting Table, for machines with inch system based lead spindle - refer to page 36.

## FROM THE THEORY TO A PRACTICAL EXAMPLE

A 1,60" dia. workpiece made of free cutting steel is to be finish turned on the EMCOMAT 7, on which a 2 mm pitch thread (M 40 x 2) is to be cut.

The prerequisite for obtaining a clean cut thread is a sharply ground turning tool having a profile corresponding accurately to that of the thread to be cut. For metric threads a threading tool having a $60^{o}$ pressure angle is to be used, clamped in the tool post, accurately level with the height of the centres and right angled to the workpiece.

To select the correct machine speed rate we read from the Table of Materials (page 33) under the heading "Free Machining Steel" a cutting speed of 60 ft/min for the thread cutting operation. Now following the vertical auxiliary line on the Cutting Speed Table under the heading "Work Piece 1,60" dia." until reaching the crossing point on the horizontal auxiliary line of 60 ft/min we find that this point of intersection lies between the speeds of 130 and 265 r.p.m. But as the crossing point is nearer to the lower speed we select the 130 r.p.m. speed. (Spindle headstock gearing to be set for 65 r.p.m., with the control unit engaged for stage II).

CHANGE GEAR COMBINATION FOR A METRIC THREAD
(2 mm thread)

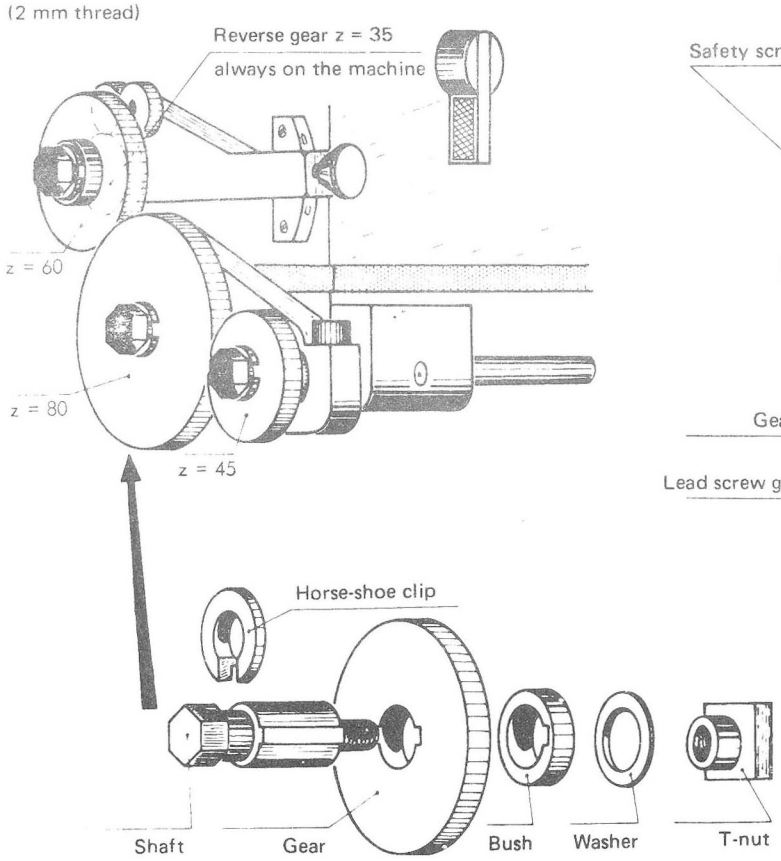


FEED GEAR BOX cpl.

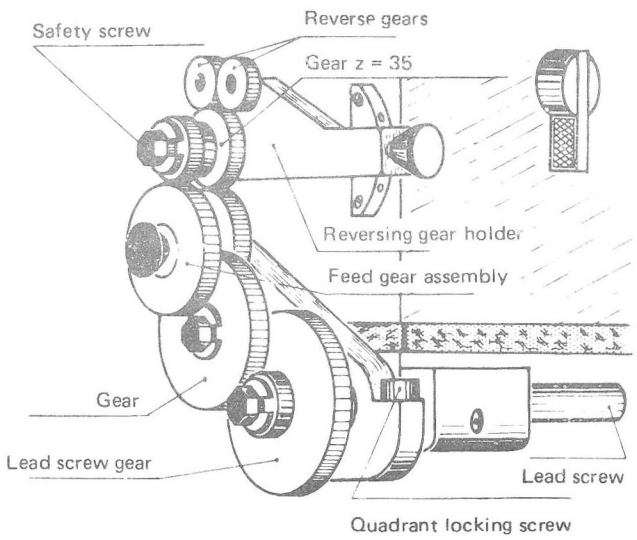


## INSTRUCTION FOR MOUNTING THE GEARWHEEL COMBINATION

1. Take down the feed gearing –

   a) Slacken the locating screw SW 10; remove locking plate, and withdraw the 20-teeth gearwheel and sleeve. The 35-teeth tumbler gear will not be removed from the machine.

   b) Withdraw the feed unit.

   c) Withdraw the intermediary gear and the lead screw gear wheel hafter having slackened the hexagon head screws and removed the locking plate.

2. Slip the 60-teeth gearwheel on to the tumbler gear bolt and then fit up the sleeve. Fix the gearwheel with the locating plate and locking screw to the tumbler gear bolt.

3. Slip a sleeve on to the lead screw and mount and secure the 45-teeth gear.

4. Insert the shear pin into the top nut of the quadrant.

5. Slip a bush on to the shear pin and then fit up the 80-teeth gear.

6. Slide the 80-teeth intermediary gear fitted to the shear pin close to the lead spindle gearwheel and engage the intermediary gear in the latter toothed wheel. The intermediary gear is then to be secured in this position.

7. Swing the quadrant with the intermediary gear upward and engage it with the 60-teeth gear on the tumbler gear stud.

## SCREWCUTTING WITH THE MAXIMAT V 10

Metric thread from 0.25 mm – 4.00 mm pitch.

Prior to screwcutting pull the push and pull knob of the sliding gear (Part No.21 of operating controls) fully out. Select the required pitch with swing arm and lever (Part No.22, 23 of operating controls). The tumbler reverse lever (Part No. 3) is placed in the relevant position for right-hand or left-hand thread.

Do not change gears whilst the machine is running.

The half-nuts can be opened after each cut when cutting any of the following pitches, 3 – 1.5 – 1 – 0.6 – 0.5 – 0.3 – 0.2 – 0.15.

## THE CUTTING OF INCH AND MODULE PITCHES

This necessitates the removal of the standard quadrant and sliding gear from the Norton box and replacing this with the universal quadrant and change gears. The change gears are assembled according to the table (for module and inch pitch see page 34, 35). For the Norton gearbox to suit the required pitch. It is now possible to select several pitches with the Norton box; all these pitches are shown in the table (see page 34, 35) in the vertical rows.

Note: When the universal quadrant with change wheels is fitted, it is not possible to change over to feed selection.

## USING THE TOOLPOST GRINDER EMCOMAT 7 / 7 L and MAXIMAT V 10

The motor as well as the grinding spindle has a 3 step belt pulley. 3 speeds viz. 4500, 8000 and 12.000 r.p.m. can be selected by changing over the belt.

The belt should only be moderately tensioned to prevent unnecessary power consumption and undue wear.

## DRESSING OR TRUING OF THE GRINDING WHEEL

To obtain a perfect surface of the ground workpiece it is essential to true the grinding wheel with a truing diamond prior to every grinding operation. The best suitable diamond is the truing diamond, reference Order No. 1160.

Clamp the truing diamond in cross position to the lathe chuck so that the diamond will be level with the height of the centres and pointing forward. To prevent the lathe chuck from twisting during the truing operation adjust for the lowest speed. Then set for a 4500 r.p.m. speed of the Tool Post Grinding Attachment, and start feeding. Move the revolving grinding wheel close to the point of the truing diamond – just to touch it. Feed 0,002 ft with the cross support and carry out the truing operation with the longitudinal slide. This operation should be repeated until the grinding wheel is completely clean over its entire periphery. Never apply more than 0,002 ft lest the truing diamond be damaged.

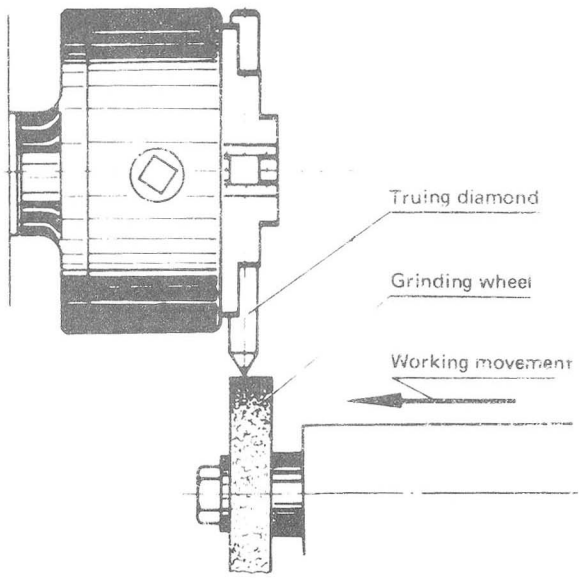

## FEEDS AND SPEEDS FOR GRINDING

| | |
|---|---|
| Cutting speed | 15 - 25 m/sec. |
| Grinding wheel speed: | |
| External | 4500 r.p.m. |
| internal | 8000 or 12000 r.p.m. |

Surface speed of workpiece 10 - 15 m/min.

## EXTERNAL GRINDING

For external grinding mainly the 60 mm dia. grinding wheel, grain 80, hardness grade M, is being used. The grinding wheel is bolted to the arbor at the tool post grinding attachment, trued and should remain in this position until it becomes worn out. The locating arbor with the mounted grinding wheel is to be clamped in the spindle by means of a draw-in tube. To grind the workpiece the tool post grinding attachment with the rotating grinding wheel (4500 r.p.m.) is advanced to the slowly revolving workpiece until a slight grinding spark formation occurs. The longitudinal slide rest of the tool post grinding attachment is then moved into the initial position. Apply a feed of maximum 0,1 mm with the cross support and engage the automatic feed. The grinding operation will proceed automatically.

## INTERNAL GRINDING

Replace the external grinding arbor by the internal grinding arbor. Smaller grinding wheels can be mounted on the front end of the grinding arbor (6 mm dia.) and secured by means of a M 3 screw. Very small grinding tools (below 15 mm) have a cast-in M 3 type screw and can be screwed direct into the grinding arbor; If they are equipped with cylindrical shanks a suitable Lorch-Schmidt watchmaker's collet of type B 8 can be inserted in the spindle and clamped. These small grinding implements require likewise truing by the truing diamond. Adjust for a spindle speed of 8000 or 12000 r.p.m. for internal grinding. The grinding operation is similar to that of external grinding.

## TAPER GRINDING

For taper grinding move the tool post grinding attachment with the top rest into the desired angular position. Adjust with the cross support; the feed for the longitudinal movement is controlled by turning the handwheel.

## NOTE !

An increase in operating temperature can occur during the first few hours, but this will not harm the spindle. The temperature will automatically drop after a few hours.

# THE VERTICAL UNIT

## CLAMPING THE TOOL AND REMOVING IT FROM THE VERTICAL SPINDLE

The use of the jacking nut KD 6.30-22, to the adaptor KD 6.30-21, of the jacking pin KD 6.30-37 and the drawbolt KD 6.30-33 on the Vertical Spindle:

The drawbolt is to be screwed with its external thread M 10 into the clamping device or direct into the tool. The tool is to be clamped in the spindle withe the internal thread of the adaptor M 8 (Fig.1).

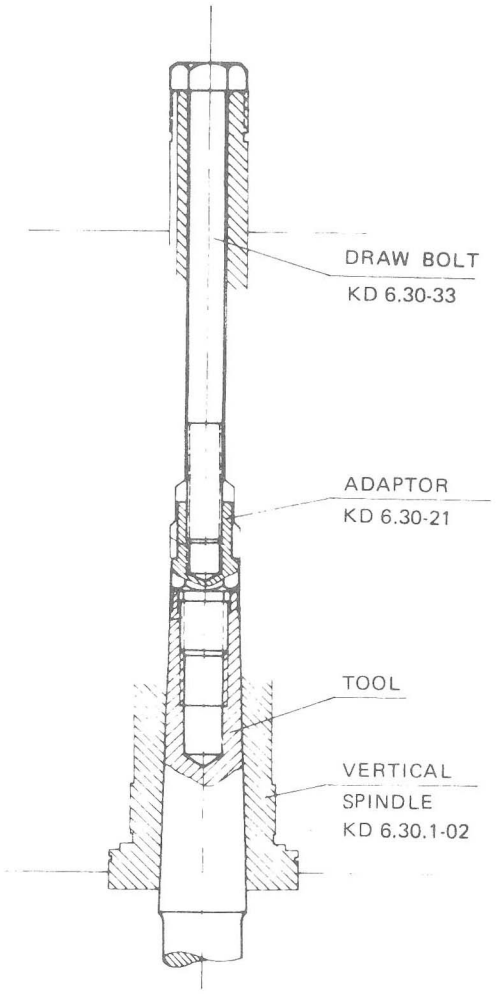


Fig. 1
**CLAMPING**

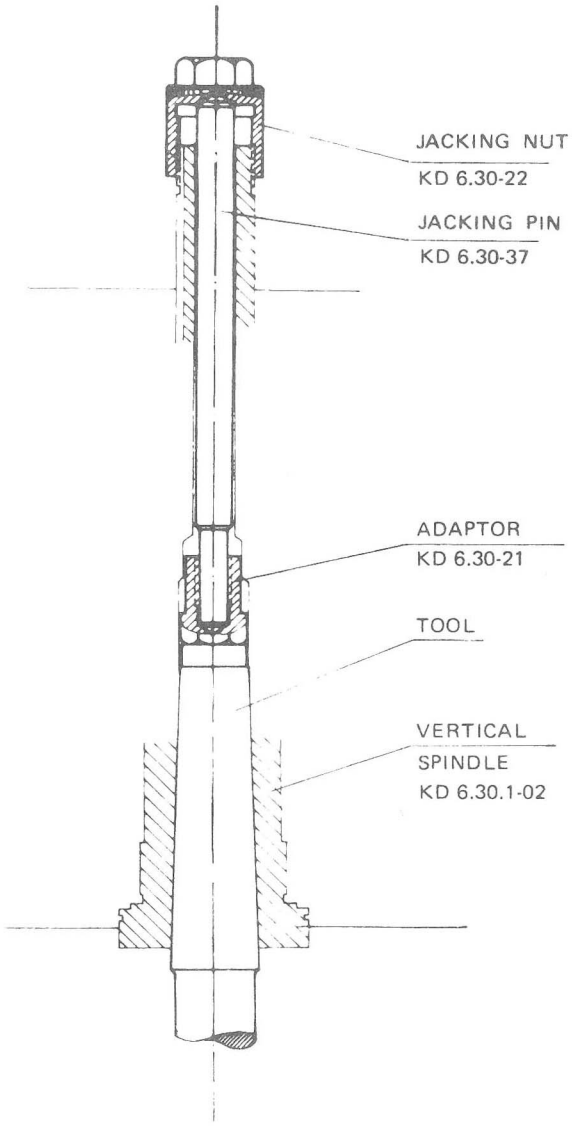


Fig. 2
**REMOVAL**

To remove the tool from the Vertical Spindle unscrew the drawbolt and push the spingloaded jacking pin from above into the spindle, with the jacking press the tool out

To remove the tool from the Vertical Spindle unscrew the drawbolt and push the springloaded jacking pin from above into the spindle, with the jacking nut press the tool out of the spindle: hold the tool with one hand as it will drop out after beeing released.

Tools without draw-in threads (with fixing device) are only inserted in the spindle. These tools are likewise removed with jacking pin and jacking nut.

## SETTING CONSTANT DRILLING DEPTH

If several holes of identical depth are to be produced, it is possible to set the stop as follows to achieve this:

1. Slacken quill locking screw (13 mm A/F). The quill returns to the zero position.
2. Slacken hexagon screw part (2) whilst holding hexagon screw part (1).
3. Fit drilling key and drop quill together with tool until the latter touches the workpiece.
4. Hold the quill in this position. Turn index collar clockwise to its stop and lock with hexagon head screw part (2) whilst holding screw part (1).
5. The required depth of hole can now be read directly from the dial. (From graduation to graduation = 1 mm.)
6. When the required depth has been reached, hold down the quill, slacken screw part (2) and rotate the dial anticlockwise to the stop and re-lock with screw part (2) whilst holding screw part (1).

ADJUSTING DRILLING DEPTH

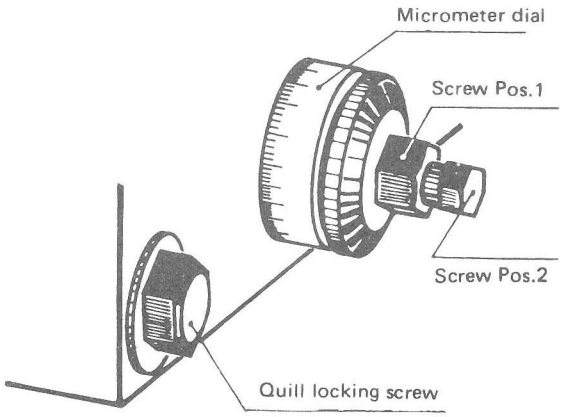


Any number of holes can now be drilled on identical components having the same hole depth.

# THE DIVIDING HEAD

With the aid of the dividing head it is possible to carry out on the EMCOMATYUniversal machine complete with vertical unit, operations such as drilling and milling on items such as gears or dividing plates.

The dividing head is equipped also for direct indexing using an index plunger and for indirect indexing using the worm dividing unit. (Graduations are provided on the outside of the table to cross check the index sequence.)

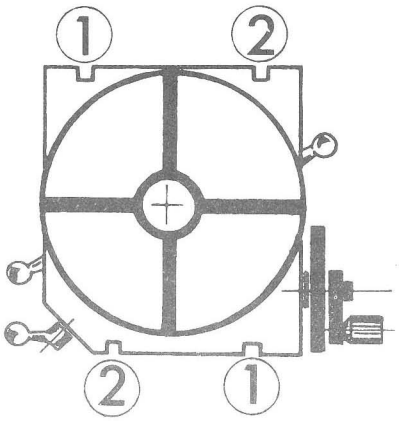


(1) Maximat V 10 (2) Emcomat 7, 7/L

## MOUNTING OF THE DIVIDING ATTACHMENT

The unit is mounted on the cross support and located with 2 clamping bolts. The indexing plate with the crank handle is arranged right hand in front.

## LOADING THE WORKPIECES

Cumbersome and asymmetric workpieces are clamped on the circular table; 4 holding t-slots are milled into this table, and centering grooves are cut into its clamping surface, which facilitate the centering of the workpiece.

For clamping cylindrical workpieces and workpieces of symmetric section the 3 or 4-jaw chuck is used on the indexing unit. First unscrew the chuck from its chuck flange, fasten the intermediary flange to the lathe chuck with three socket head cap screws, and finally bolt down the chuck (with intermediary flange) with 4 slotted screws on to the circular table.

## VARIOUS INDEXING METHODS

The choice of the best suitable indexing method to be applied will depend on the final use of the workpiece.

## "DIRECT" INDEXING

The advantage of the "Direct Indexing" method lies in the quick manipulation; moreover, by engaging a bolt into a tooth space indexing faults are avoided. The dividing wheel has a tooth space every 15°, thus 24 tooth spaces over the entire periphery. In this way all indexing numbers of 24, i.e. 2, 3, 4, 6, 8, 12 and 24 can be direct-indexed.

## OPERATING THE DIRECT-INDEXING METHOD

1; Release locking levers, part.Nos.1, 2.

2. Slacken clamping screw, part No.3. Swing aside anti-clockwise the Indirect-Indexing Head until the stop, and lock in this position.

3. Pull out the Direct-Indexing lever, part No.4, and swing sideways by 45° in anti-clockwise direction.

The circular table can now be turned into any desired position and locked with the two locking levers, part Nos.1, 2. If, e.g. a part is required with 6 divisions turn the circular table until the zero mark coincides with the division mark of the pointer, In this position the direct indexing lever, part No.4, should be engaged and the circular table locked with the locking levers (part Nos.1,2).Proceed now with the initial dividing operation.

For continued indexing by one sixth loosen the locking levers (part No.1,2) pull out the direct indexing lever and rotate the circular table by 4 tooth spaces (hence 60°). Engage again the indexing lever, and then lock again the circular table with the two locking levers (part No.1,2). The remaining dividing operations are carried out in a similar manner.

## "INDIRECT" INDEXING

The Indirect Indexing is the most accurate dividing process due to the provision of a worm reducting gear of 1:40 ratio. (Indexing faults are thereby reduced to 1:40 !) By using the various indexing plates (part No.5) any desired dividing can be carried out.

## INDEXING PLATE (PART No.5)

The Indexing Unit is supplied with 3 Indexing plates, two of which have each 3 circles of holes, whereas the third has 2 circles of holes. Thus 8 circles of holes of 27 to 42 are available, as referred to in the indexing table.

## THE INDIRECT INDEXING METHOD

Due to the worm reduction ratio of 1:40 forty turns of the indexing crank handle are required for one complete revolution of the indexing table. Thus all divisors contained in the number 40 (viz.40, 20, 10, 8, 5, 4, 2) can be set straight away.
To provide for further setting it is necessary to be able to make not only complete turns of the crank handle but also parts of a turn. To that purpose the indexing plate is subdivided.

# INDEX TABLE

for

**Emcomat 7**
**Emcomat 7/L**
**Emcomat V 10**

## FORMULA FOR THE CALCULATION OF THE HOLE NUMBERS REQUIRED

z = No. of divisions required for one revolution of the workpiece
K = No. of revolutions of handle for a com plete revoulution of the workpiece.
n = No. of revolutions of handle for one diving move: $n = \frac{K}{z}$
Worm reduction of dividing head 1 : 40 i.e. K = 40

| Division Desired | Degrees | No. of crank turns req'd. | Amount of holes to be added for each index plate | | | | | | | |
|---|---|---|---|---|---|---|---|---|---|---|
| | | | 27 | 33 | 34 | 36 | 38 | 39 | 40 | 42 |
| 2 | 180° | 20 | | | | | | | | |
| | 175° | 19 | 12 | | | | | | | |
| | 170° | 18 | 24 | | | | | | | |
| | 160° | 17 | 21 | | | | | | | |
| | 150° | 16 | 18 | | | | | | | |
| | 140° | 15 | 15 | | | | | | | |
| | 130° | 14 | 12 | | | | | | | |
| | 125° | 13 | 24 | | | | | | | |
| 3 | 120° | 13 | 9 | 11 | | 12 | | 13 | | 14 |
| | 110° | 12 | 6 | | | | | | | |
| | 100° | 11 | 3 | | | | | | | |
| 4 | 90° | 10 | | | | | | | | |
| | 80° | 8 | 24 | | | | | | | |
| | 75° | 8 | 9 | 11 | | 12 | | 13 | | 14 |
| 5 | 72° | 8 | | | | | | | | |
| | 70° | 7 | 21 | | | | | | | |
| | 65° | 7 | 6 | | | | | | | |
| 6 | 60° | 6 | 18 | 22 | | 24 | | 26 | | 28 |
| | 55° | 6 | 3 | | | | | | | |
| 7 | | 5 | | | | | | | | 30 |
| | 50° | 5 | 15 | | | | | | | |
| 8 | 45° | 5 | | | | | | | | |
| 9 | 40° | 4 | 12 | | | 16 | | | | |
| 10 | 36° | 4 | | | | | | | | |
| 11 | | 3 | | 21 | | | | | | |
| 12 | 30° | 3 | 9 | 11 | | 12 | | 13 | | 14 |
| 13 | | 3 | | | | | | 3 | | |
| 14 | | 2 | | | | | | | | 36 |
| | 25° | 2 | 21 | | | | | | | |
| 15 | 24° | 2 | 18 | 22 | | 24 | | 26 | | 28 |
| 16 | | 2 | | | 17 | 18 | 19 | | 20 | 21 |
| 17 | | 2 | | | 12 | | | | | |
| 18 | 20° | 2 | 6 | | | 8 | | | | |
| 19 | | 2 | | | | | 4 | | | |
| 20 | 18° | 2 | | | | | | | | |
| | 16° | 1 | 21 | | | | | | | |
| 21 | | 1 | | | | | | | | 38 |
| 22 | | 1 | | 27 | | | | | | |
| 24 | 15° | 1 | 18 | 22 | | 24 | | 26 | | 28 |
| 25 | | 1 | | | | | | | 24 | |
| 26 | | 1 | | | | | | 21 | | |
| 27 | | 1 | 13 | | | | | | | |
| 28 | | 1 | | | | | | | | 18 |
| 30 | 12° | 1 | 9 | 11 | | 12 | | 13 | | 14 |

| Division Desired | Degrees | No. of crank turns req'd. | Amount of holes to be added for each index plate | | | | | | | |
|---|---|---|---|---|---|---|---|---|---|---|
| | | | 27 | 33 | 34 | 36 | 38 | 39 | 40 | 42 |
| 32 | | 1 | | | | 9 | | | 10 | |
| 33 | | 1 | | 7 | | | | | | |
| 34 | | 1 | | | 6 | | | | | |
| 35 | | 1 | | | | | | | | 6 |
| 36 | 10° | 1 | 3 | | | 4 | | | | |
| 38 | | 1 | | | | | 2 | | | |
| 39 | | 1 | | | | | | 1 | | |
| 40 | 9° | 1 | | | | | | | | |
| 42 | | | | | | | | | | 40 |
| 44 | | | | 30 | | | | | | |
| 45 | 8° | | 24 | | | 32 | | | | |
| 48 | | | | | | 30 | | | | 35 |
| 50 | | | | | | | | | 32 | |
| | 7° | | 21 | | | 28 | | | | |
| 52 | | | | | | | | 30 | | |
| 54 | | | 20 | | | | | | | |
| 55 | | | | 24 | | | | | | |
| 56 | | | | | | | | | | 30 |
| 60 | 6° | | 18 | | | | | | | |
| 64 | | | | | | | | | 25 | |
| 65 | | | | | | | | 24 | | |
| 66 | | | | 20 | | | | | | |
| 68 | | | | | 20 | | | | | |
| 70 | | | | | | | | | | 24 |
| 72 | 5° | | 15 | | | 20 | | | | |
| 76 | | | | | | | 20 | | | |
| 78 | | | | | | | | 20 | | |
| 80 | | | | | 17 | 18 | 19 | | 20 | 21 |
| 84 | | | | | | | | | | 20 |
| 85 | | | | | 15 | | | | | |
| 88 | | | | 15 | | | | | | |
| 90 | 4° | | 12 | | | 15 | | | | |
| 95 | | | | | | | 16 | | | |
| 96 | | | | | | 15 | | | | |
| 100 | | | | | | | | | 15 | |
| 120 | 3° | | 9 | 11 | | 12 | | 13 | | 14 |
| 180 | 2° | | 6 | | | 8 | | | | |
| 200 | | | | | | | | | 8 | |
| 240 | | | | | | 6 | | | | 7 |
| 270 | | | 4 | | | | | | | |
| 360 | 1° | | 3 | | | | | | | |
| | 40' | | 2 | | | | | | | |
| | 30' | | | | | 2 | | | | |
| | 20' | | 1 | | | | | | | |

## THE INDEXING CHART

**The first vertical column shows the number of the desired dividing numbers, the second column shows the degrees of angle corresponding to the dividing number. The third column shows the number of complete turns to be made with the crank of the Indirect Indexing Arrangement for the corresponding divisor. The remaining eight columns refer to the number of holes which must be added to the complete revolutions of the circle of holes.**

## A PRACTICAL EXAMPLE FOR THE DIVIDING OPERATION:

To index a 13' - dividing — The number of dividing plate holes required for the operation will be found in the Indexing Chart. Accordingly the dividing plate having a circle of 39 holes will have to be mounted on the Indirect Indexing Head.

The operation is to be carried out as follows:

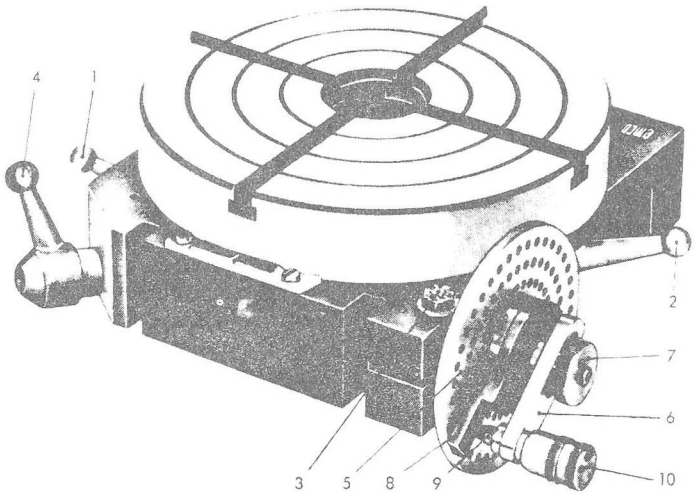


1. Unscrew the knurled nut (part.No.7); remove lever (part No.6).
2. Remove shears (part No.8).
3. Unscrew the two countersunk screws and withdraw the indexing plate.
4. Fit up the indexing plate with a circle of 39 holes, and re-mount the Indirect Indexing Head in reverse order.
5. Set crank with its indexing finger for the 39 holes circle.
6. Slacken locking screw and adjust shears so that 4 indexing holes are included (when extra three holes are to be indexed).
7. Slacken locking screw (part No.3), swing the Indirect Indexing Head in clockwise direction until the stop and locate it again with locking screws.
8. The two locking levers should now be slackened and the Direct Indexing Unit swivelled sideways.
9. The shears should then be moved in crank turning direction until one leg bears against the indexing pin (part No.9).
10. Pull out the indexing pin with the handlever (part No.10), make three complete revolutions: the indexing pin is again in position above the starting hole.
11. Now add the three extra dividing holes in the same direction of rotation, and let the index pin engage in the dividing hole. (The index pin must bear against the second leg of the shears).
12. Locate the circular table with the two locking levers.
13. For the next dividing operation continue swiveling the shears in the direction of rotation until the first leg bears again against the indexing finger.

This completes the first dividing operation. The next dividing operation with the workpiece is carried out in the same manner.

ATTENTION: Prior to every dividing operation the locking levers (part Nos.1,2) must be slackened and re-locked after the operation.

NOTE: If a number of indexing holes is to be set with the shears, which exceeding the shears' maximum opening, e.g. 38 holes on the 42-indexing plate, set the difference of the holes between the two legs of the shears.

## AN EXAMPLE:

42-38 = 4 holes. For indexing one extra complete revolution has now to be made, and the set hole number 4 between the two legs of the shears should not to be added but deducted.

# LUBRICATION DIAGRAM
## Emcomat 7
## Emcomat 7/L

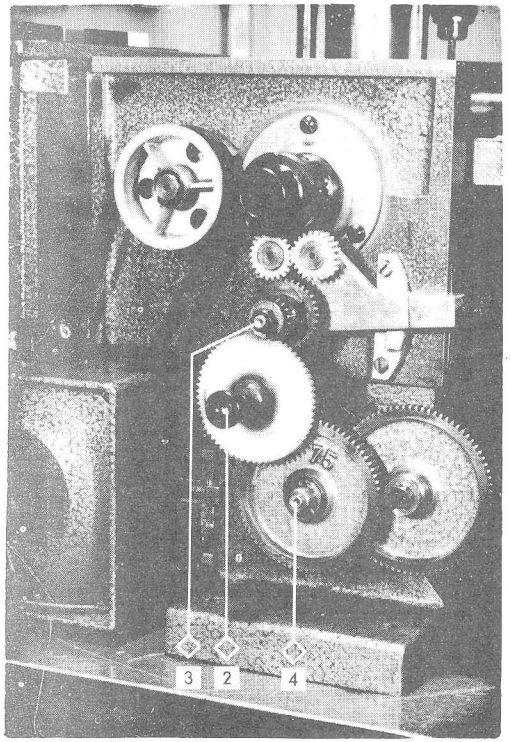


| | No | Service Interval | Lubrication point | Grease | Oil |
|---|---|---|---|---|---|
| ◇ | 1 | Before use | Check oil level in gear box through glass window * | | SAE 10 |
| ◇ | 2 | " | Drive gear bores | ■ | |
| ◇ | 3 | " | Gear bearing grease nipples | ■ | |
| ◇ | 4 | " | Gear teeth | | ■ |
| ◇ | 5 | " | Leadscrew bearing, left side | ■ | |
| ◇ | 6 | " | Bedways – keep clean, free of chips | | ■ |
| ◇ | 7 | " | Rack – lubricate entire length | ■ | |
| ◇ | 8 | " | Leadscrew – keep clean, free of chips, lubricate entire length | | ■ |
| ◇ | 9 | " | Leadscrew bearing, right side | ■ | |
| ◇ | 10 | " | Compound slides & feed screw | | ■ |
| ◇ | 11 | " | Vertical leadscrew | | ■ |
| ◇ | 12 | " | Vertical column | | ■ |
| □ | 13 | Every 1000 hrs. | Tailstock lubricating nipple | ■ | |
| □ | 14 | " | Cross slide lubrication nipple | ■ | |
| □ | 15 | " | Rack gear (lubricated through 14) | ■ | |
| O | 16 | Every 100 hrs | Lathe headstock gear box – change completely | | ½ pint |
| O | 17 | " | Milling head gear box ** | ■ | |

* **LATHE HEADSTOCK**: Before use, check oil level through glass window in casting near spindle nose. Oil level should show in middle of glass. If additional oil is required, remove gear box cover by removing the 4 top screws.

** **VERTICAL HEADSTOCK**: To service milling head gears, remove both side plates. Clean off old grease completely, and pack with new grease (Kluber Lubrication, ST 15/400 PP) or equivalent.

All sliding surfaces should be oiled with an acid free oil from time to time.

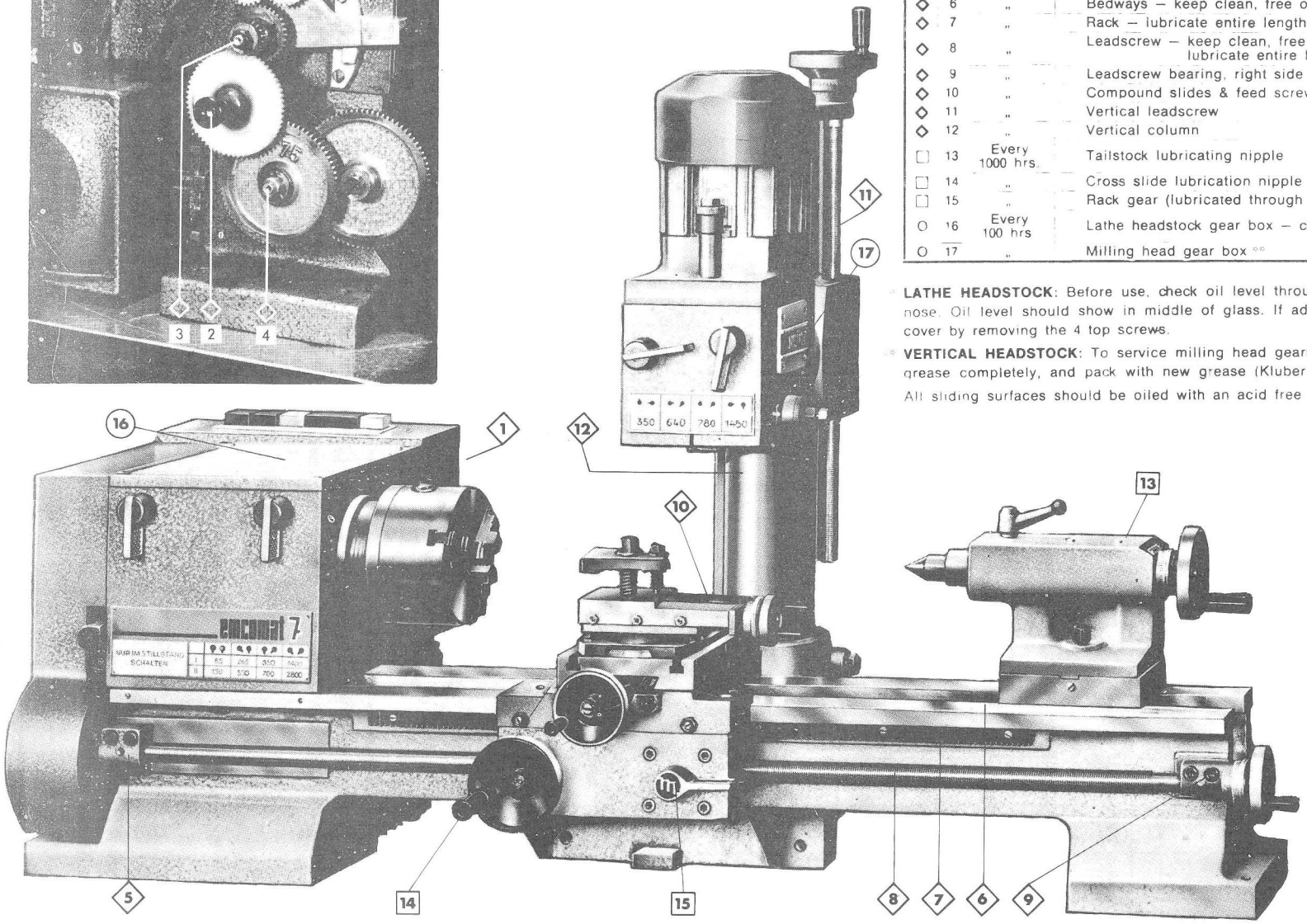

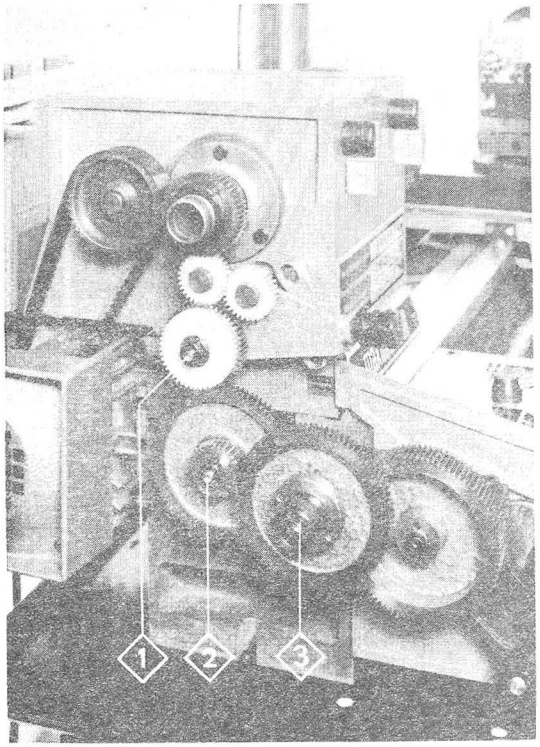


# LUBRICATION DIAGRAM for MAXIMAT V 10

| No. | Interval | Position | Grease | Oil |
|---|---|---|---|---|
| 1 | Prior to starting | Gears, nipple, grease, gear oil | | ■ |
| 2 | " | | ■ | ■ |
| 3 | " | | ■ | ■ |
| 4 | " | Check oil, sight glass headstock R.H. side | ■ | ■ |
| 5 | " | Screw of vertical head adjustment | ■ | |
| 6 | " | Vertical column | | ■ |
| 7 | " | Clean leadscrew and oil all over | ■ | |
| 8 | " | Grease traverse rack | | ■ |
| 9 | " | Keep bedways clean all over | | ■ |
| 10 | " | | | ■ |
| 11 | " | Grease R.H. leadscrew bearing | | ■ |
| 12 | " | Top, slide and guides, screw | | ■ |
| 13 | " | Cross slide and guides, screw | ■ | |
| 14 | Every 500 operating hours | Lubricationg nipples for carriage and half nuts | ■ | |
| 15 | " | Tailstock barrel | ■ | |
| 16 | Every 100 operating hours | Headstock gears, SAE 10/0.2 l oil | | ■ |
| 17 | " | Norton box, gear oil SAE 140/0.25 l | | ■ |
| 18 | " | Gears of vertical head | ■ | |

**HEADSTOCK :** The oil level in the head must always be checked prior to starting. the oil level is checked at the sight glass on the right-hand side of the spindle nose, oil level to be at centre of glass. To top up, remove headstock cover.

**VERTICAL UNIT:** Remove both side covers from the head and remove the used grease, replace with fresh grease such as Klüber lubrication St 15/400 PP or grease of similar quality.

All sliding surfaces should be oiled regularly with an acid free machine oil.

**NORTON BOX:** When changing oil, open drainscrew and drain off all old oil, refill with the correct quantity of the recommended oil.

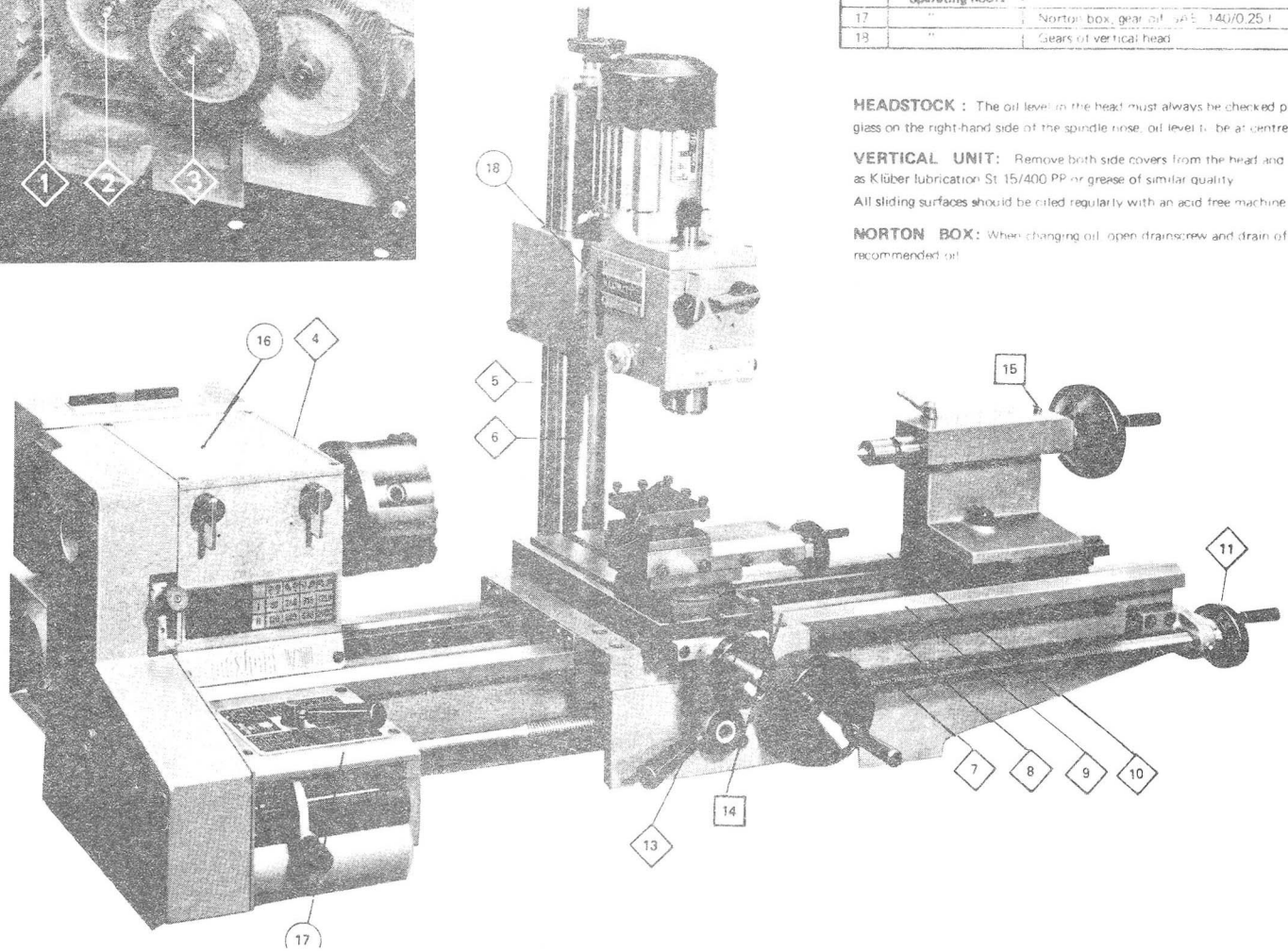

# ADJUSTMENT OF THE BEARINGS

## ADJUSTING THE HEADSTOCK SPINDLE BEARINGS.
(Emcomat 7, Emcomat 7/L, Maximat V 10)

The mainspindle bearings are correctly adjusted at the works. If end play becomes evident after considerable use, the bearings can be adjusted by slackening the grub screw in the slotted nut on the left-hand side of the spindle and to tighten the slotted nut with a "C" spanner until all end play is taken up, but with the spindle still revolving freely. (Excessive pre-loading will damage the bearings). Tighten grub screw (Fig. 1)

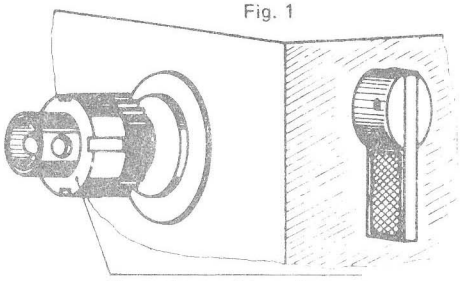

Fig. 1

## ADJUSTING THE SLIDES
(Emcomat 7, Emcomat 7/L, Maximat V 10)

Each slide is fitted with a gib strip which can be adjusted with screws fitted with look nuts. The gib strip is adjusted with the screws until the slide moves freely without play, after which the lock nuts are tightened (Fig. 2).

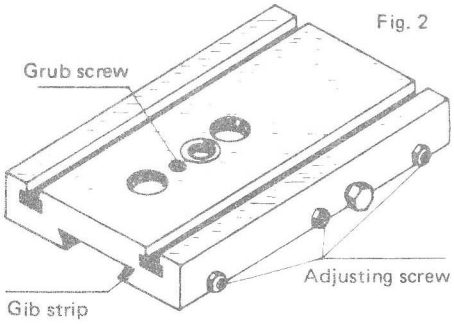

Fig. 2

## ADJUSTMENT OF FEED SCREW END FLOAT
(Emcomat 7, Emcomat 7/L, Maximat V 10)

When one of the three slides (saddle, cross or top slide) develops end float, slacken the screw in the relevant hand wheel and adjust the nut untill all play has been taken up. Re-lock the nut with the screw ( Fig. 3)

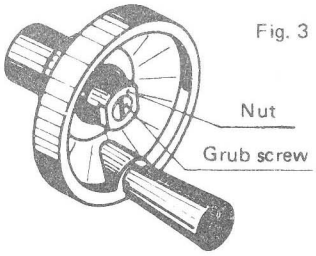

Fig. 3

## ADJUSTING THE FEED SCREW BACKLASH

## CROSS SLIDE SCREW
(Emcomat 7, Emcomat 7/L)

Remove top slide and adjust grub screw until the blacklash has been eliminated (Fig. 2)

## CROSS SLIDE SPINDLE
(Maximat V 10)

Remove the 2 screws holding the spindle bracket in position and unscrew the spindle. Adjust the screwed ring (Fig. 4) until the backlash is eliminated.

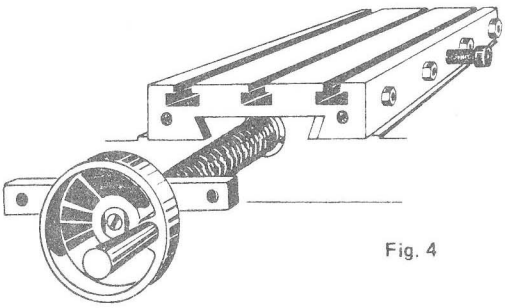
Fig. 4

## TOP SLIDE SPINDLE
(Emcomat 7, Emcomat 7/L, Maximat V 10)

Remove the 2 screws holding the spindle bracket in position and unscrew the spindle. Adjust the screwed ring until all backlash has been eliminated (Fig. 5)

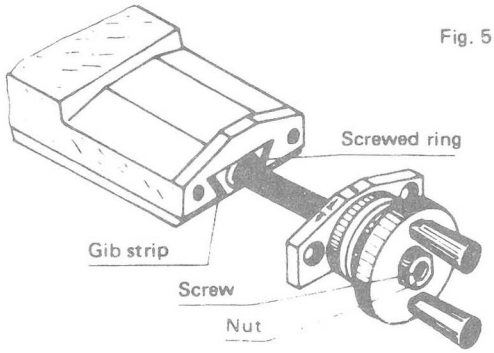

Fig. 5

## ADJUSTING THE HALF-NUT GUIDE
(Emcomat 7, Emcomat 7/L)

Loosen the 2 right-hand socket head screws on the apron and adjust the control screw behind the lever until both half-nuts move freely without play (Fig. 6). Tighten both socket head screws.

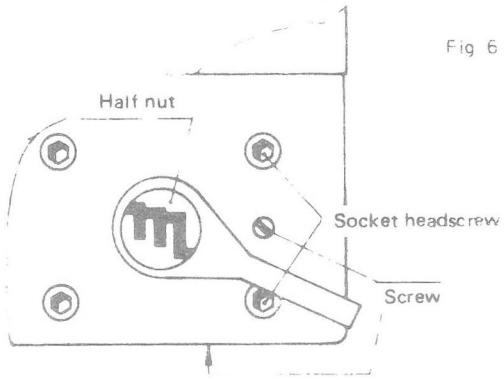

Fig 6

## ADJUSTING THE HALF-NUT GUIDE
(Maximat v 10) (Fig. 7)

Loosen the 2 right-hand side socket head screws on the apron; adjust the screw (between the socket head screws) until both half-nuts move freely without play. Tighten both socket head screws.

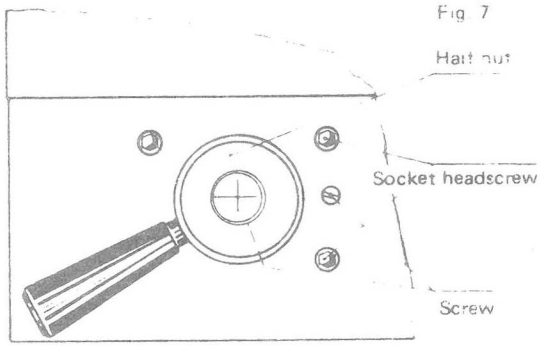

Fig 7

## ADJUSTING LEAD SCREW BACKLASH
(Emcomat 7, Emcomat 7/L)

Unscrew the stop screw on the bottom face of the apron until the backlsah has been eliminated when teh half-nuts are closed (Fig. 6)

## ADJUSTING LEAD SCREW BACKLASH
(Maximat V 10)

Unscrew the stop screw on the bottom face of the half-nut clasp lever until the backlash has been eliminated, when the half-nuts are closed (Fig. 7)

## ADJUSTING THE BACKLASH OF THE VERTICAL HEAD FEED SCREW
(Emcomat 7, Encomat 7/L, Maximat V 10)

Also, in this case, adjust the screwed ring until all backlash has been removed (Fig. 8)

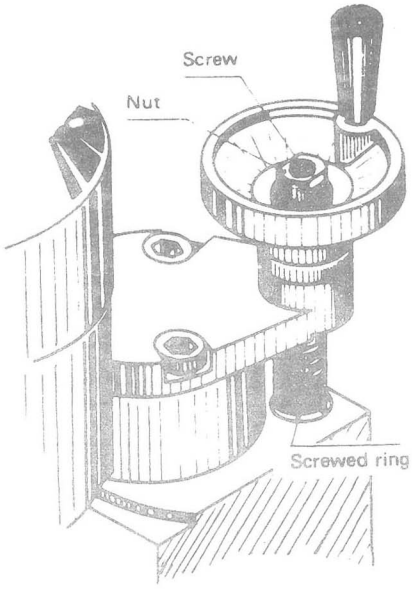

Fig. 8

## CHANGING THE BELT
## (Emcomat 7, Emcomat 7/L, Maximat V 10)

When the driving belt (between the motor and countershaft) needs replacing, remove the motor fan casing, remove safety ring and then the timing belt pulley, followed by the belt itself. Now replace the belt, timing pulley and lock. When replacing the fan casing make sure that the belt lies properly inside the recesses to prevent scuffing.

## CHECKING OF CORRECT TENSION:

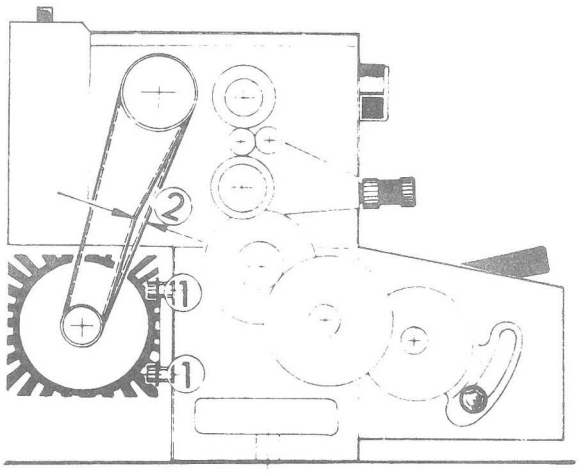


For securing a quiet running of the machine and for avoiding a quick wear of the toothed belts, these must have the correct tension.
Checking of correct tension:
1) The belt may give in 6 - 8 mm (1/4" to 5/16"). See drawing, pos. 2
2) For changing the belt tension, slacken front and rear motor fixing screws (pos. 1). Displace motor parallelly until the right tension of belt is obtained.

## EXAMPLE REGARDING THE CHOICE OF THE CORRECT OPERATING SPEED

Rough Turning of a shaft made of steel having a strength of 70 kilos/squ.millimeter (= 44 tons/square inch) on the EMCOMAT 7; Shaft dia. 2,30".

We note from the Materials Table under the headings "Steel Strength 70 kilos/squ.mm (= 44 tons/square inch) and "Rough Turning" a cutting speed of 60 feets/min.

Looking up the Cutting Speed Table and column "Workpiece Dia.2,30", and following the vertical auxiliary line up until the crossing point with the horizontal auxiliary of 60 feet/min we find that the point of intersection lies between the speeds of 65 and 130. But as this point is nearer to the higher speed we choose the operating speed of 130 r.p.m.

## MATERIAL TABLE FOR LATHE
## (Emcomat 7, Em comat 7/L, Maximat V 10)

| MATERIAL | Cutting speeds in M/Min for HSS Tools | | | | |
|---|---|---|---|---|---|
| | Roughing | Finishing | Drilling | Reaming | Screw cutting |
| Auto Steel | 35 | 50 | 40 | 12 | 20 |
| Steel 31 tons/In2 | 30 | 40 | 35 | 10 | 15 |
| Steel 44 tons/In2 | 20 | 30 | 30 | 8 | 8 |
| Cast iron | 20 | 35 | 20 | 8 | 8 |
| Brass | 60 | 100 | 60 | 20 | 30 |
| Alum alloy | 60 | 150 | 60 | 30 | 30 |

## MATERIAL TABLE FOR VERTICAL UNIT
## (Emcomat 7, Emcomat 7/L, Maximat V 10)

| MATERIAL | Recommended Cutting Speed M/Min |
|---|---|
| Steel 31 tons/In2 | 25 |
| Steel 44 tons/In2 | 25 |
| Cast iron | 25 |
| Brass | 60 |
| Alum Alloy | 200 |

## SADDLE FEEDS IN MM/MIN
(Emcomat 7, Emcomat 7/L)

| R.P.M. | 65 | 130 | 265 | 350 | 430 | 700 | 1400 | 2800 |
|---|---|---|---|---|---|---|---|---|
| Finishing speed | 3,30 | 6,60 | 13,30 | 17,50 | 26,60 | 35,00 | 70,00 | 140,00 |
| Roughing speed | 7,80 | 15,60 | 31,80 | 42,00 | 63,60 | 84,00 | 168,00 | 336,00 |

## CUTTING SPEED TABLE FOR LATHE AND VERTICAL HEAD TYPE
EMCOMAT 7
EMCOMAT 7/L
MAXIMAT V 10

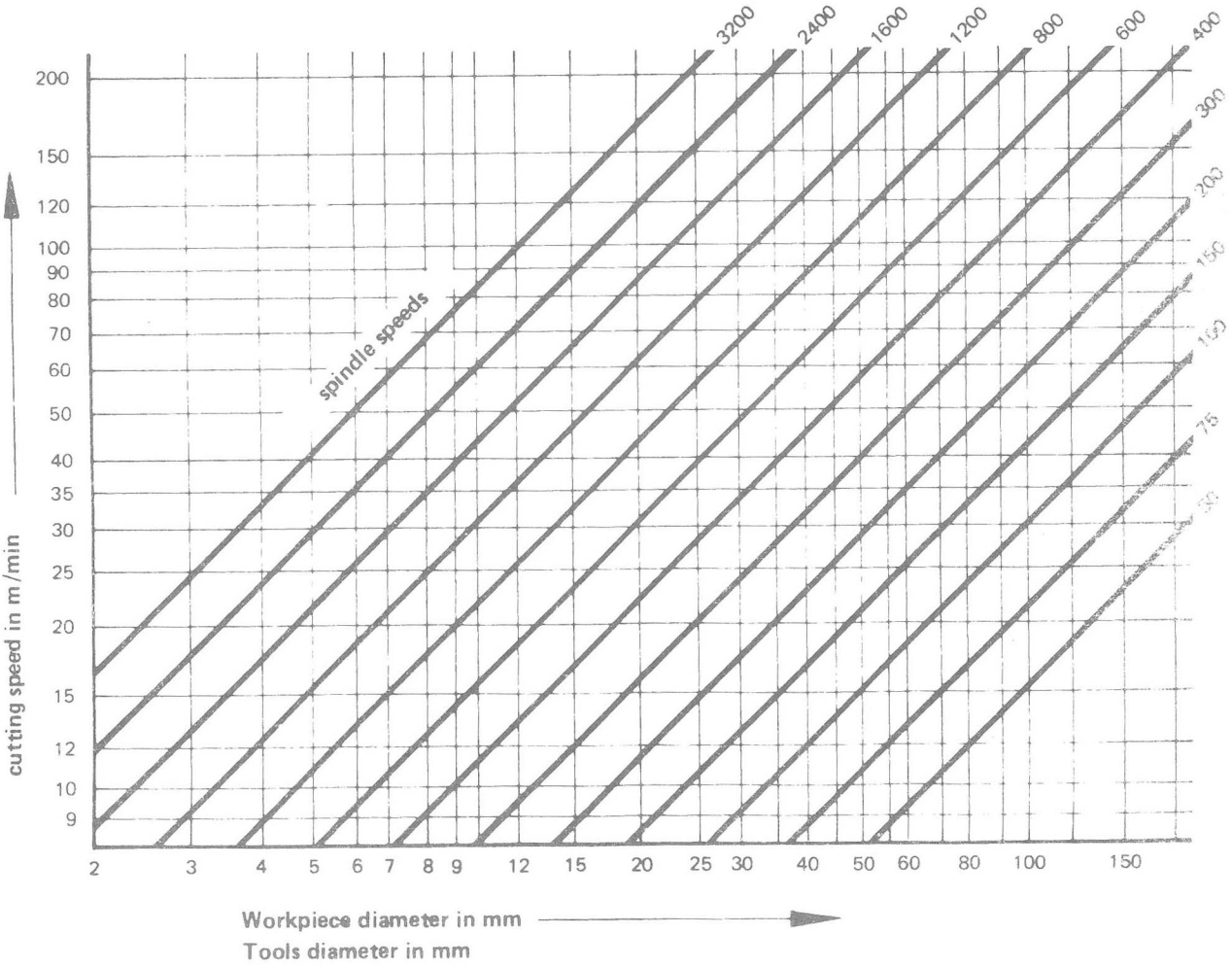

# THREADS PER INCH FOR MAXIMAT V 10 NORTON BOX M

## Change gear combinations for Universal Quadrant M

H = sleeve  A - C = lever position  a - h = swing-arm position

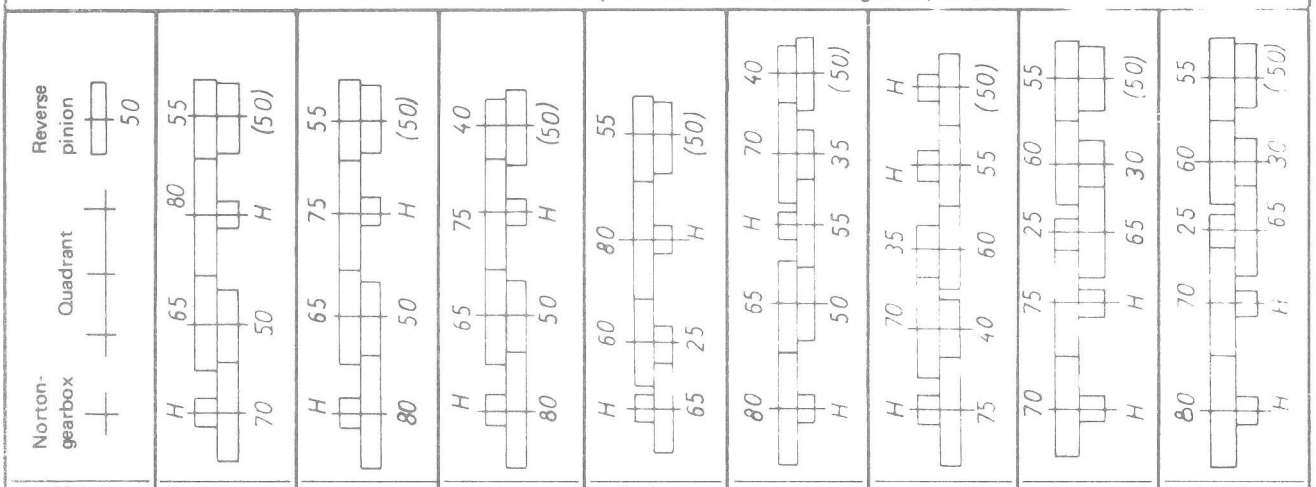


| Norton-gearbox | | | | | | | | |
|---|---|---|---|---|---|---|---|---|
| 120 | | | | A b | | | A g | A h |
| 114 | | | | | | A e | | |
| 110 | | | A b | | | | | |
| 105 | | | | | | | A h | |
| 96 | | A a | | | | | | B a |
| 95 | | | | | | A f | | |
| 90 | | | | A d | | | | |
| 84 | A a | | | | | | B a | |
| 80 | | A b | | | | | | B b |
| 78 | | | | | A e | | | |
| 72 | | | | A e | | | | |
| 70 | A b | | | | | | B b | |
| 66 | | | A e | | | | | |
| 65 | | | | | A f | | | |
| 64 | | | | | | | | C b |
| 60 | A c | A d | | A f | | | B c | B d |
| 57 | | | | | | B a | | |
| 56 | | | | | | | C b | |
| 55 | | | A f | | | | | |
| 48 | | A e | | | | | C c | B e |
| 45 | | | | A h | | | | |
| 42 | A e | | | | | | B e | |
| 40 | | A f | | | | | | B f |
| 39 | | | | | B a | | | |
| 38 | | | | | | C b | | |
| 36 | | | | B a | | | | |
| 35 | A f | | | | | | B f | |
| 33 | | | B a | | | | | |
| 32 | | | | | | | | C f |
| 30 | A g | A h | | B b | | | B g | B h |
| 28 | | | | | | | C f | |
| 26 | | | | | C b | | | |
| 24 | | B a | | C b | | | C g | C h |
| 22 | | | C b | | | | | |
| 21 | B a | | | | | | C h | |
| 20 | | B b | | | | | | |
| 19 | | | | | | C f | | |
| 18 | | | | B e | | | | |
| 16 | | C b | | | | | | |
| 15 | B c | B d | | B f | | | | |
| 14 | C b | | | | | | | |
| 13 | | | | | C f | | | |
| 12 | C c | B e | | C c | | | | |
| 11 | | | C f | | | | | |
| 10 | | B f | | | | | | |
| 9 | | | | C h | | | | |
| 8 | | C f | | | | | | |
| 7 | C f | | | | | | | |
| 6 | C g | C h | | | | | | |

# INCH THREADS OR FEEDS WITH QUICK CHANGE BOX "Z"

## MAXIMAT V 10

| | | | | | | | | | | |
|---|---|---|---|---|---|---|---|---|---|---|
| A | 8 | 9 | 9 1/2 | 10 | 11 | | 12 | | 13 | 14 |
| B | 16 | 18 | 19 | 20 | 22 | | 24 | | 26 | 28 |
| C | 32 | 36 | 38 | 40 | 44 | | 48 | | 52 | 56 |

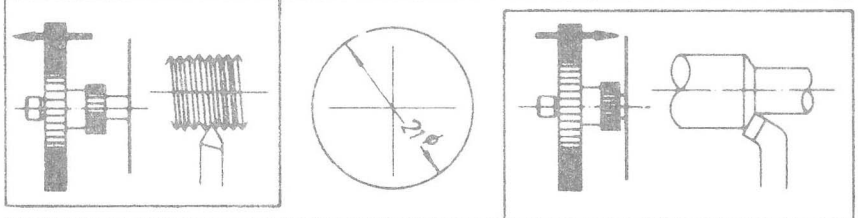


| | | | | | | | | | | |
|---|---|---|---|---|---|---|---|---|---|---|
| A | .0139 | .0125 | .0117 | .0111 | .0101 | | .0093 | | .0085 | .0079 |
| B | .0069 | .0062 | .0058 | .0055 | .0050 | | .0046 | | .0043 | .0040 |
| C | .0035 | .0031 | .0029 | .0028 | .0025 | | .0023 | | .0021 | .0020 |
| | a | b | c | d | e | | f | | g | h |

# METRIC THREADS CUTTING WITH QUICK CHANGE BOX "Z"

## UNIVERSAL QUADRANT WITH 12 CHANGE GEARS

H - Spacer sleeve
A — C - Top lever position
a — h - tumpler lever position
Z - Stud gear on reverse gear holder

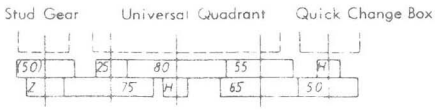


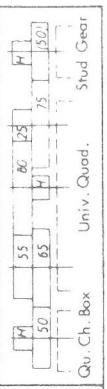


| Pitch in mm | Z = 30 | Z = 35 | Z = 40 | Z = 45 | Z = 60 | |
|---|---|---|---|---|---|---|
| 0,25 | C f | C h | | | | |
| 0,30 | C d | | | | | |
| 0,35 | | C d | | | | |
| 0,40 | | | C d | | | |
| 0,45 | | | | C d | | |
| 0,50 | B f | B h | C a | C b | C f | C d |
| 0,60 | B d | | | | C d | |
| 0,70 | | B d | | | | |
| 0,75 | B a | | | B f | C a | |
| 0,80 | | | B d | | | |
| 0,90 | | | | B d | | |
| 1,00 | A f | A h | B a | B b | B f | B d |
| 1,25 | | | | | | B a |
| 1,50 | A a | | | A f | B a | |
| 1,75 | | A a | | | | |
| 2,00 | | | A a | A b | A f | A d |
| 2,25 | | | | A a | | |
| 2,50 | | | | | | A a |
| 3,00 | | | | | A a | |

# METRIC THREADS OR FEEDS, QUICK CHANGE BOX "M"
## MAXIMAT V 10

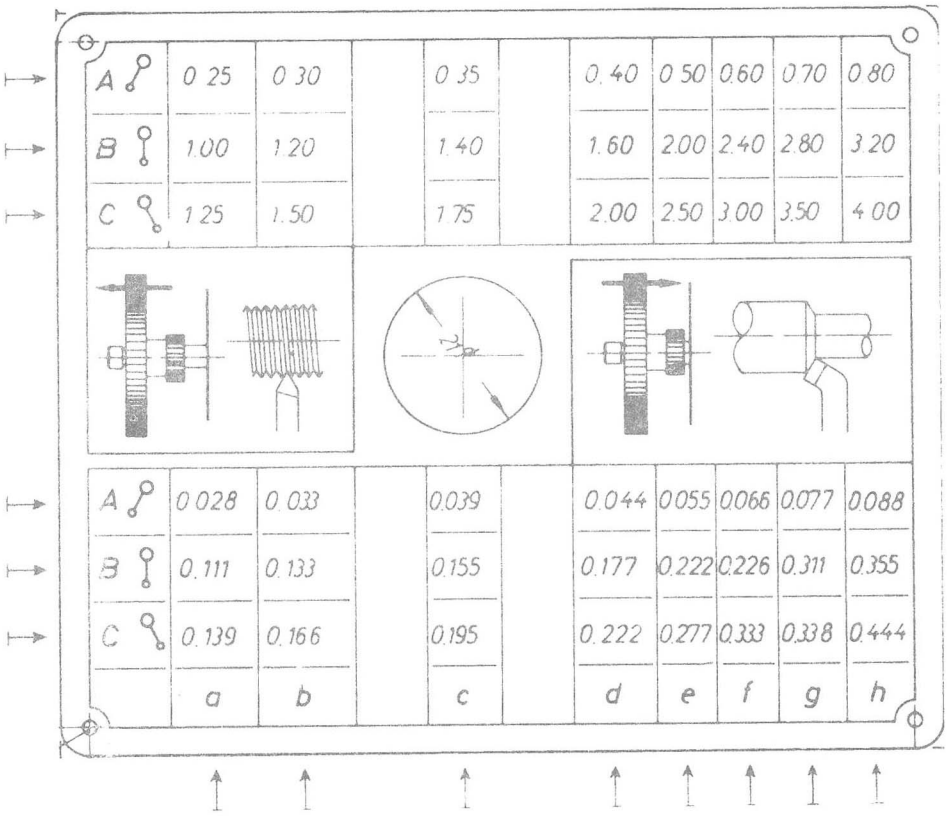


## MODULE THREAD FOR MAXIMAT V 10 QUICK CHANGE BOX "M"

H = Spacer sleeve  A - C = Top lever position  a - h = Tumbler lever position

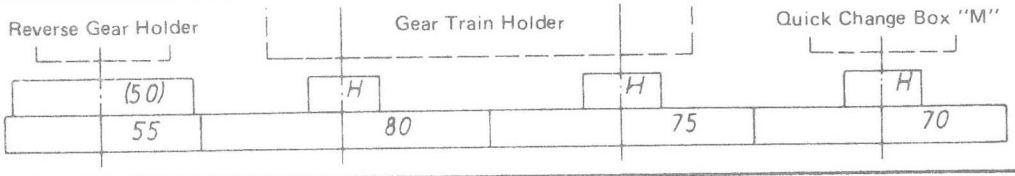


| Module | Top lever and tumbler lever | | Module | Top lever and tumbler lever | |
|---|---|---|---|---|---|
| 0,15 | A | b | 0,75 | C | b |
| 0,175 | A | c | 0,80 | B | d |
| 0,20 | A | d | 1,00 | B | e |
| 0,25 | A | e | 1,20 | B | f |
| 0,30 | A | f | 1,25 | C | e |
| 0,35 | A | g | 1,40 | B | g |
| 0,40 | A | h | 1,50 | C | f |
| 0,50 | B | a | 1,60 | B | h |
| 0,60 | B | b | 1,75 | C | g |
| 0,70 | B | c | 2,00 | C | h |

## EXAMPLE FOR USING SCREW CUTTING TABLES FOR EMCOMAT 7 · EMCOMAT 7/L

**Machine with metric leadscrew; a metric thread of 0.75 pitch is required:**

**In the Table for Metric Leadscrews we find in the column 0,75 the relevant gearwheel combination. The gearwheels and spacers respectively shown in the right hand row of the column are always the first to be mounted, that is to say, before those of the left hand row. The horizontal line represents the gearwheels in engagement. Where the table column Z,, is bridged by a horizontal line the second shear pin is dispensed with. (The force flows from the tumbler over the intermediary wheel Z, to the lead screw.)**

| mm | 0.4 | 0.5 | 0.6 | 0.7 | 0.75 | 0.8 |
|---|---|---|---|---|---|---|
| W | 20 | 20 | 20 | 35 | 20 | 40 |
| Z₁ | 80 H | 75 H | 75 H | H 80 | 80 H | 80 H |
| Z₂ | | | | | | |
| L | 75 H | 60 H | 50 H | H 75 | 40 H | 75 H |

## LEGEND TO THE THREAD CUTTING TABLES

| | | | | | |
|---|---|---|---|---|---|
| mm | = | Metric Thread Pitch | Z, | = | First Intermed.Gearwheel |
| Mod | = | Module Thread | Z,, | = | Second Intermed.Gearwheel |
| n/" | = | Thread Pitch Inch System | L | = | Lead Spindle Gearwheel |
| W | = | Tumbler Bolt | H | = | Spacing Bush |
| | | | E | = | Feed Unit |

## THREAD CHART FOR METRIC LEADSCREW

| mm | 0.4 | 0.5 | 0.6 | 0.7 | 0.75 | 0.8 | 1 | 1.25 | 1.5 | 1.75 | 2 | 2.25 | 2.5 | 3 |
|---|---|---|---|---|---|---|---|---|---|---|---|---|---|---|
| W | 20 | 20 | 20 | 35 | 20 | 40 | 40 | 50 | 35 | 70 | 60 | 45 | 50 | 40 |
| Z₁ | 80 H | 75 H | 75 H | H 80 | 80 H | 80 H | 80 H | 80 H | 80 70 | 80 H | 80 H | 80 H | 80 H | 80 H |
| Z₂ | | | | | | | | | | | | | | |
| L | 75 H | 60 H | 50 H | H 75 | 40 H | 75 H | 60 H | 60 H | 40 H | 60 H | 45 H | 30 H | 30 H | 20 H |

| Mod. | 0.2 | 0.25 | 0.3 | 0.35 | 0.4 | 0.45 | 0.5 | 0.6 | 0.7 | 0.9 | 1 |
|---|---|---|---|---|---|---|---|---|---|---|---|
| W | 55 | 55 | 55 | 55 | 55 | 55 | 55 | 55 | 55 | 55 | 55 |
| Z₁ | 70 40 | 70 50 | 70 60 | 70 H | 70 80 | 50 60 | 70 40 | 70 80 | 75 80 | 70 60 | 70 80 |
| Z₂ | | | | | | | H 60 | | | 50 | |
| L | H 75 | H 75 | H 75 | 75 H | H 75 | H 70 | H 30 | H 50 | H 40 | H 25 | H 30 |

| n/" | 8 | 9 | 10 | 11 | 12 | 13 | 16 | 18 | 19 | 20 | 22 | 24 | 26 | 28 | 32 | 36 | 40 | 44 | 48 | 56 | 64 | 80 |
|---|---|---|---|---|---|---|---|---|---|---|---|---|---|---|---|---|---|---|---|---|---|---|
| W | 55 | 55 | 55 | 50 | 55 | 65 | 55 | 50 | 40 | 55 | 50 | 55 | 30 | 50 | 50 | 25 | 40 | 25 | 55 | 25 | 25 | 20 |
| Z₁ | 65 50 | 45 50 | 65 60 | 65 60 | 65 50 | 70 H | 50 H | 65 55 | 80 H | 70 H | 70 H | 65 25 | 45 H | 70 55 | 65 55 | 50 H | 65 55 | 70 H | 50 H | 40 H | 40 H | 40 H |
| Z₂ | H 45 | 60 65 | H 45 | H 45 | H 45 | | 20 25 | | | | | H 80 | 50 65 | | | 65 55 | | | 60 25 | 70 55 | 65 55 | 65 55 |
| L | H 20 | 30 H | H 30 | H 30 | H 30 | 50 H | H 65 | H 45 | 45 H | 65 H | 65 H | H 30 | H 60 | H 65 | H 80 | H 45 | H 80 | 65 H | H 65 | H 65 | H 80 | H 80 |

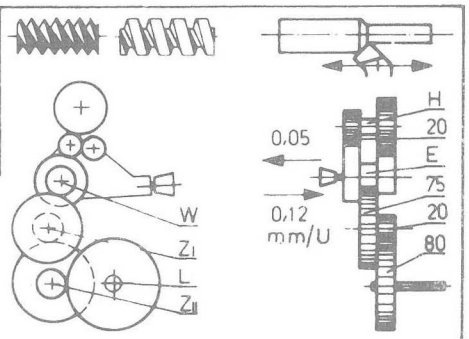


## THREAD CHART FOR INCH LEADSCREW

| n/" | 8 | 9 | 10 | 11 | 11.5 | 12 | 13 | 14 | 16 | 18 | 19 | 20 | 22 |
|---|---|---|---|---|---|---|---|---|---|---|---|---|---|
| W | 40 | 40 | 40 | 40 | 50 | 40 | 40 | 40 | 30 | 40 | 70 | 40 | 40 |
| Z₁ | 80 H | 50 H | 80 H | 50 H | 45 25 | 80 H | 50 H | 70 60 | 60 40 | 80 H | 50 45 | 80 H | 80 H |
| Z₂ | | 45 60 | | 55 60 | H 60 | | 65 60 | H 50 | H 50 | | | | |
| L | 20 H | H 30 | 25 H | H 30 | H 20 | 30 H | H 30 | H 30 | H 20 | 45 H | H 75 | 50 H | 55 H |

| n/" | 24 | 26 | 28 | 32 | 36 | 40 | 44 | 48 | 56 | 64 | 72 | 80 |
|---|---|---|---|---|---|---|---|---|---|---|---|---|
| W | 20 | 40 | 40 | 20 | 20 | 20 | 20 | 20 | 20 | 20 | 20 | 20 |
| Z₁ | 50 H | 70 H | 65 H | 80 H | 80 H | 80 H | 80 H | 80 H | 65 H | 60 H | 55 H | 55 H |
| Z₂ | 55 H | | | | | | | | | | 45 30 | 50 30 |
| L | 30 H | 65 H | 70 H | 40 H | 45 H | 50 H | 55 H | 60 H | 70 H | 80 H | H 60 | H 60 |

| mm | 0.4 | 0.5 | 0.6 | 0.7 | 0.8 | 1 | 1.25 | 1.5 | 1.75 | 2 |
|---|---|---|---|---|---|---|---|---|---|---|
| W | 50 | 55 | 35 | 55 | 50 | 40 | 50 | 60 | 70 | 65 |
| Z₁ | 75 30 | 70 30 | 65 75 | 60 H | 75 60 | 50 H | 45 H | 55 65 | 55 65 | 75 80 |
| Z₂ | | | | 50 30 | | 55 65 | 55 65 | | | |
| L | H 80 | H 75 | 80 H | H 75 | H 80 | H 75 | H 75 | H 75 | H 75 | H 55 |

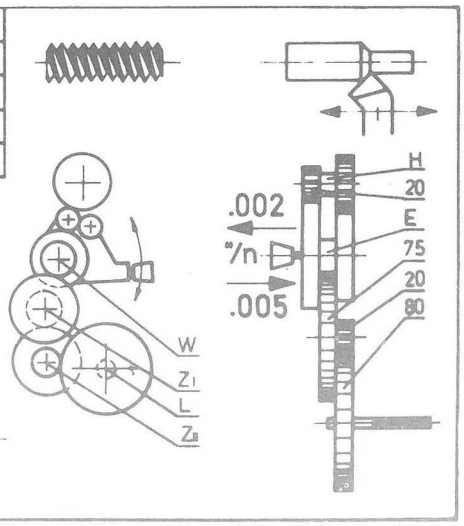

# Wiring diagram for single phase motor

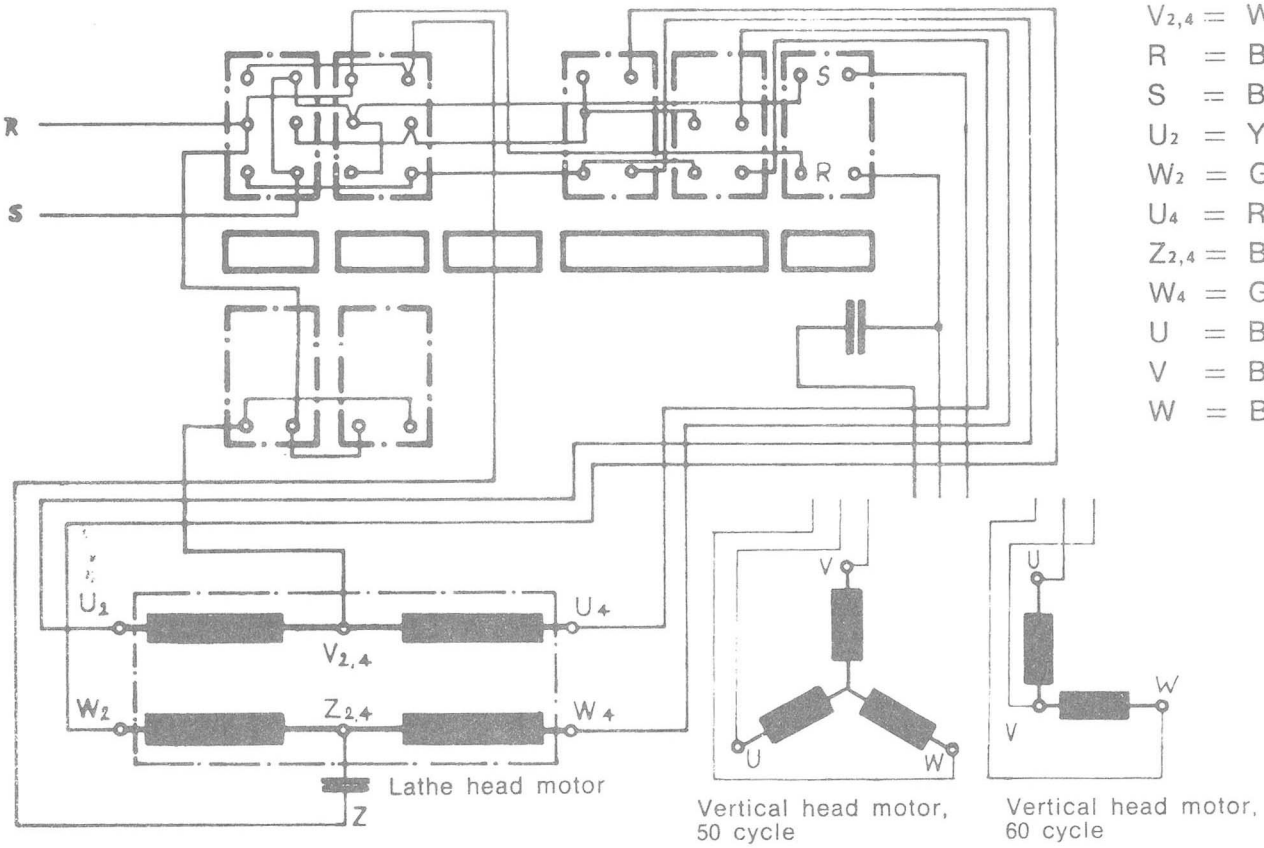


$V_{2,4}$ = White
R = Brown
S = Blue
$U_2$ = Yellow
$W_2$ = Green
$U_4$ = Red
$Z_{2,4}$ = Blue
$W_4$ = Grey
U = Brown
V = Blue
W = Black

# Wiring diagram for three phase motor

R = Brown
S = Blue
T = White
$U_2$ = Yellow
$V_2$ = White
$W_2$ = Green
$U_4$ = Red
$V_4$ = Blue
$W_4$ = Grey
U = Brown
V = Blue
W = Black

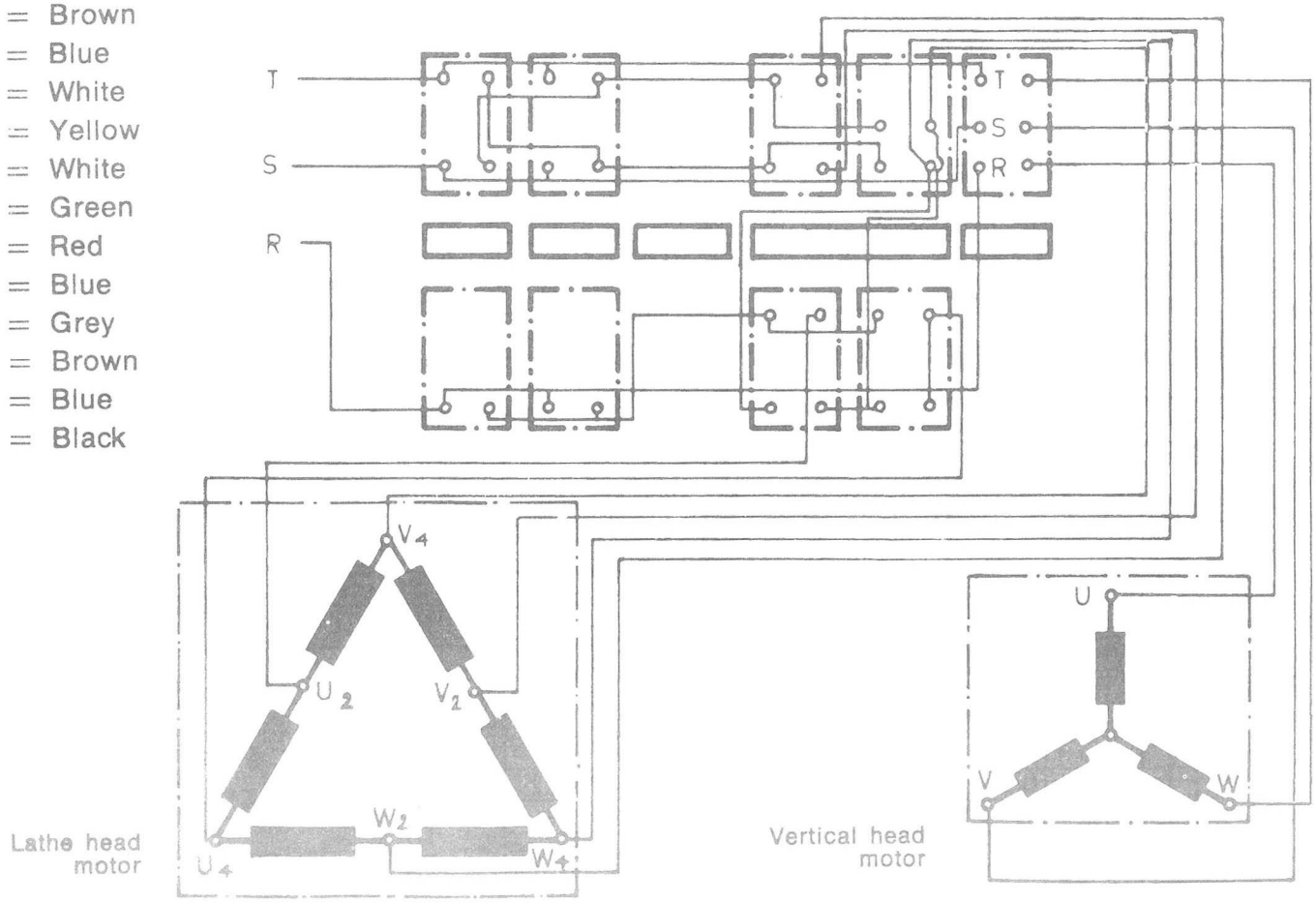


**Disconnect electrical connector from outlet before removing motor switch cover.**

# Wiring diagram for single phase motor "1 ph"

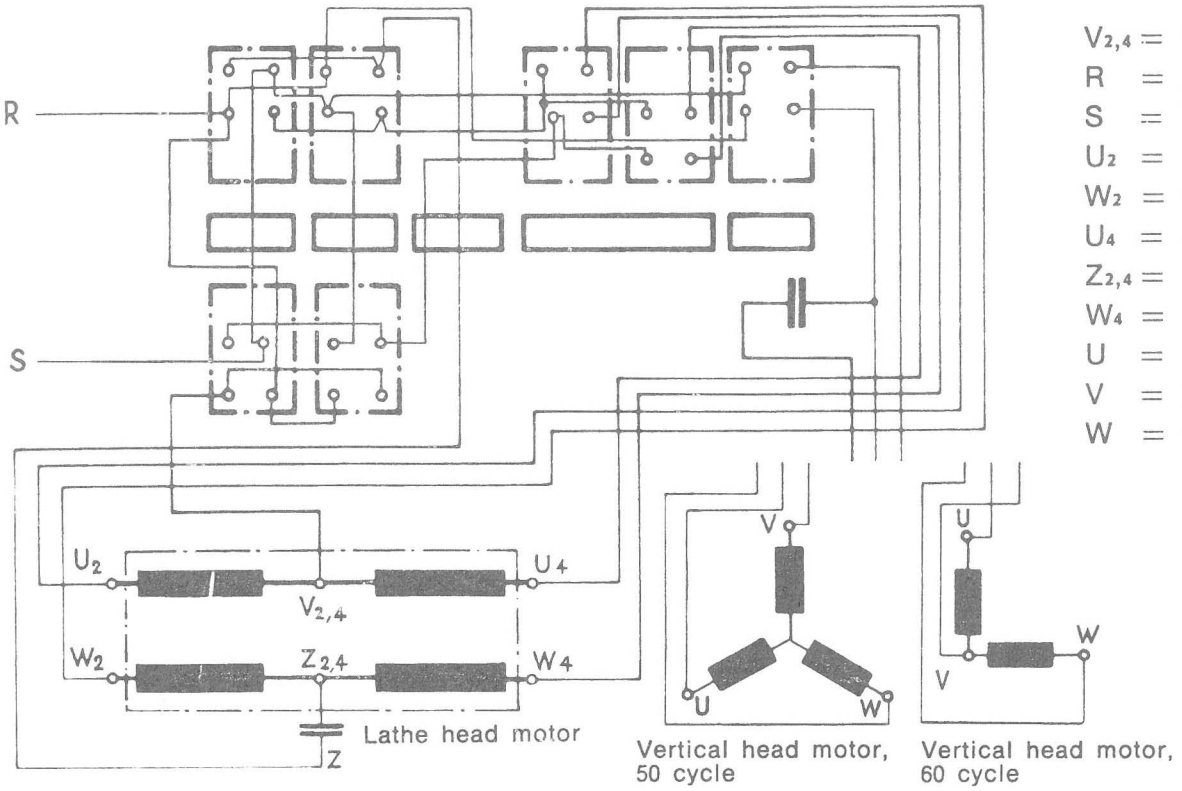


$V_{2,4}$ = White
R = Brown
S = Blue
$U_2$ = Yellow
$W_2$ = Green
$U_4$ = Red
$Z_{2,4}$ = Blue
$W_4$ = Grey
U = Brown
V = Blue
W = Black

# Wiring diagram for three phase motor "3 ph"

R = Brown
S = Blue
T = White
$U_2$ = Yellow
$V_2$ = White
$W_2$ = Green
$U_4$ = Red
$V_4$ = Blue
$W_4$ = Grey
U = Brown
V = Blue
W = Black

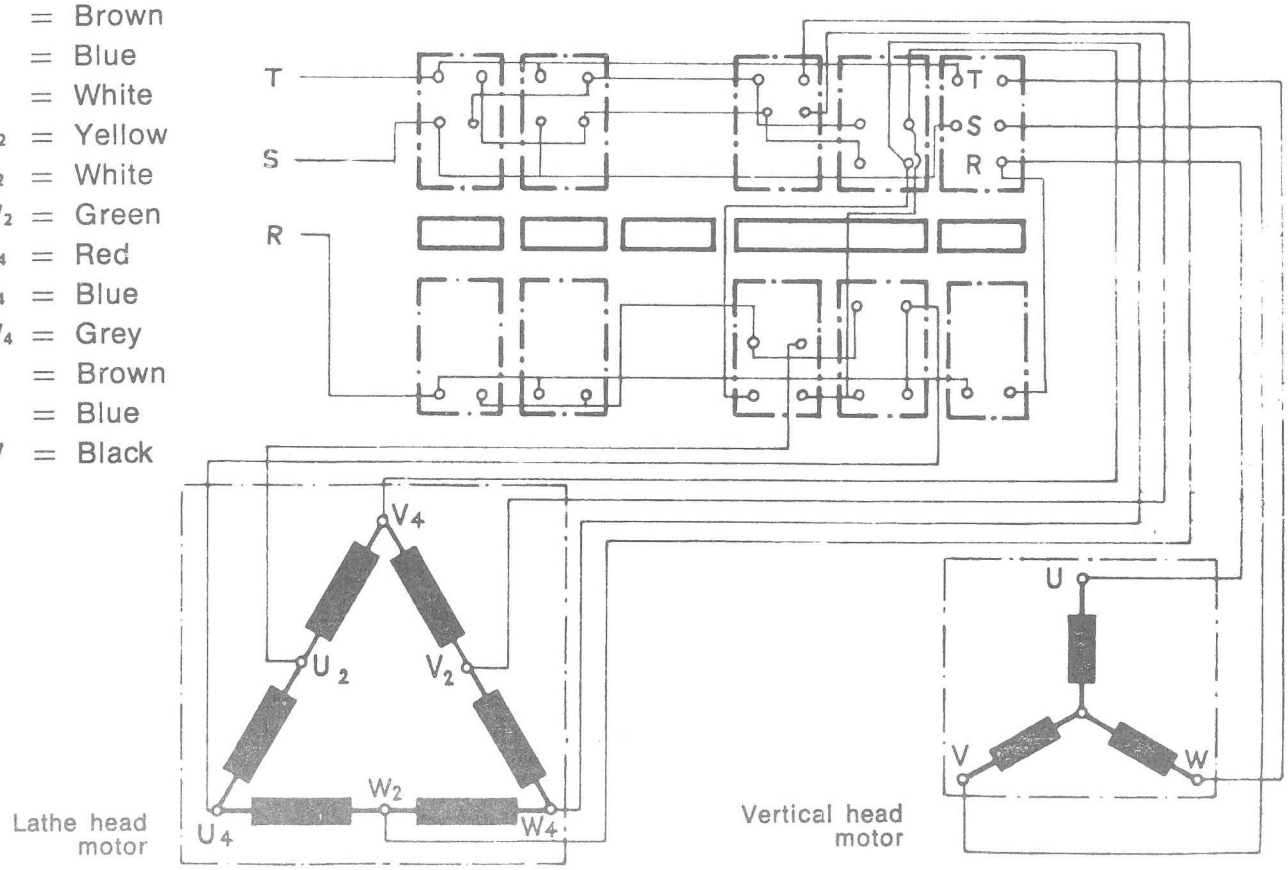


**Disconnect electrical connector from outlet before removing motor switch cover.**

## ELECTRICAL CONNECTION FOR EMCOMAT 7
## 3 PHASE VERTICAL MOTOR

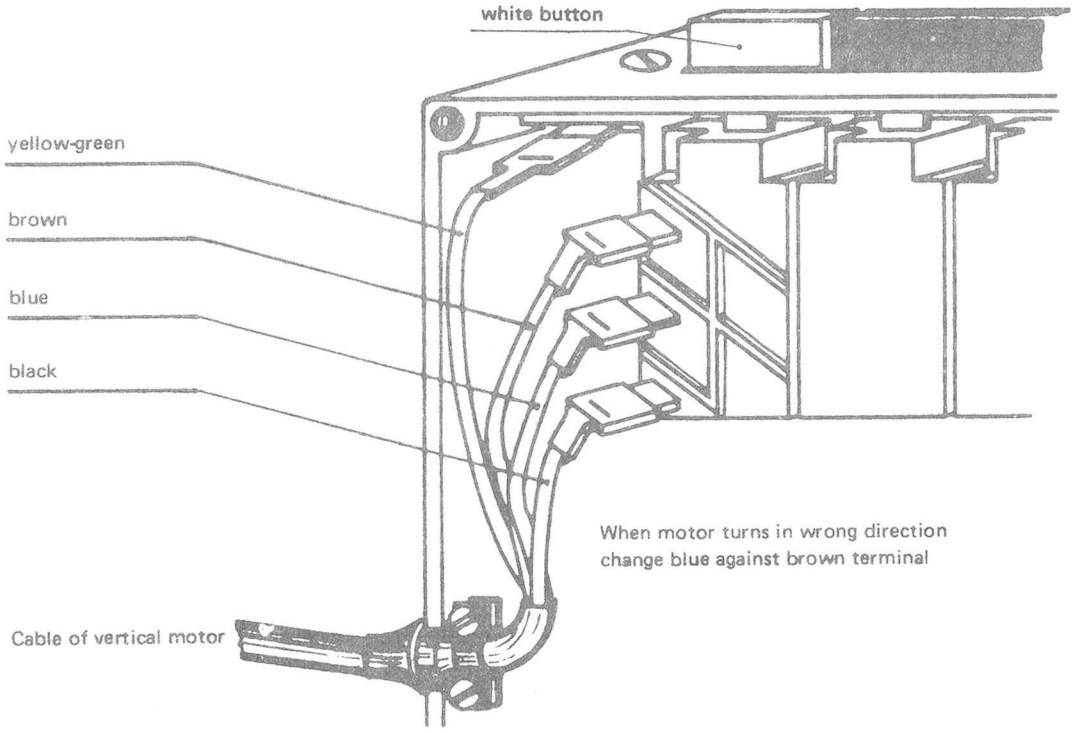


## ELECTRICAL CONNECTION FOR EMCOMAT 7
## SINGLE PHASE MOTOR

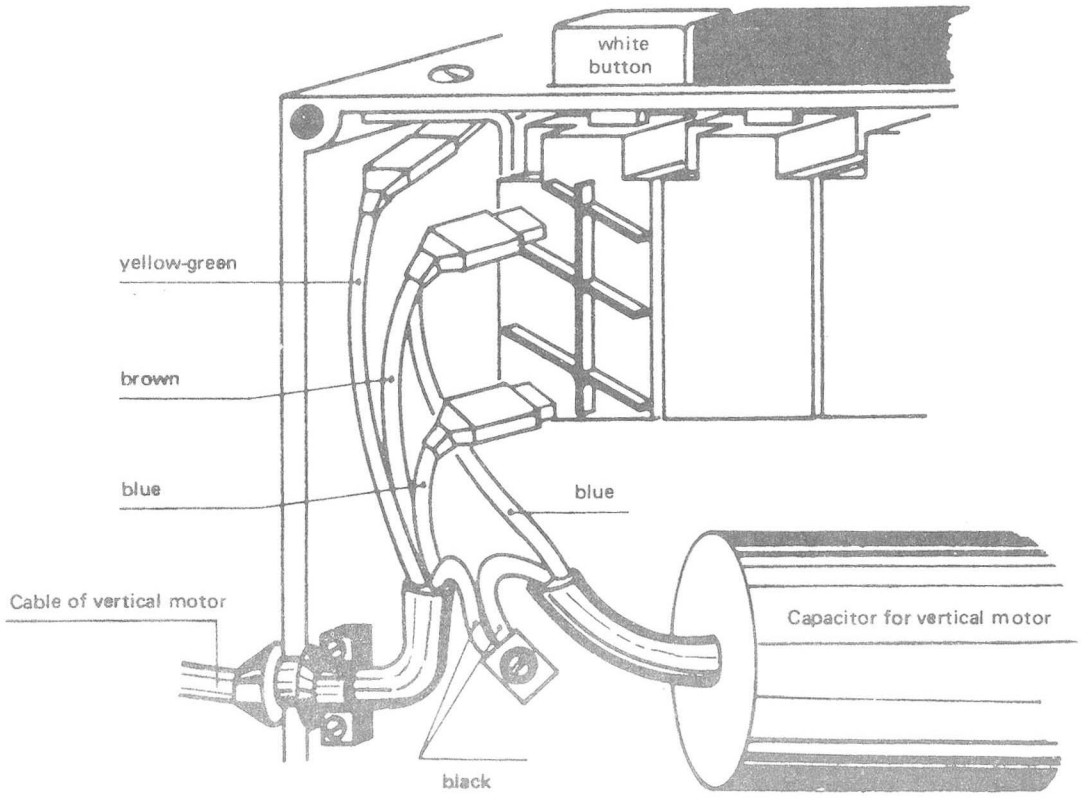

# MAXIMAT V10 P

## OPERATING INSTRUCTIONS SUPPLEMENT


1. GENERAL

2. TECHNICAL DATA

3. CONTROLS & THEIR USE
   - Feed Lever
   - Leadscrew Nut Lever
   - Bedstop
   - Feed Box Chart

4. MAINTENANCE
   - Lubrication points
   - Adjustment of Slipping Clutch
   - Adjustment of Timing Belt
   - Adjustment of Half Nut Dovetails
   - Adjustment of Half Nut Endfloat
   - Adjustment of Saddle, Cross and Compound Slides
   - Replacement of shear pins in leadscrew and feedshaft

## 1. GENERAL

The Maximat V 10 P is a surfacing and sliding centre lathe. It is fitted with power feed to the longitudinal and vross traverses. The feed shaft is fitted with a safety slipping clutch, and an adjustable bed stop is provided; the slipping clutch provides full protection to the feedbox and apron against any overload caused when turning or when the saddle or cross slide reach the end of their movement. Cross and longitudinal power feed can also be used for milling when the universal milling attachment is fitted. The leadscrew is only used for screw-cutting.
Both the feed lever and the leadscrew nut lever are fully interlocked, to prevent simultaneous selection of "feed" and "screwcutting".

All Maximat V 10 accessories can be used on the V 10 P model.

## 2. TECHNICAL DATA

| | | |
|---|---|---|
| Drive | 3 Phase Motor | 1 Phase Motor |
| Power | 1 HP at 2800 RPM<br>0,6 HP at 1400 RPM | 0,85 HP at 2800 RPM<br>0,6 HP at 2800 RPM |
| Feedshaft | Hexagon 13mm A. F. | |
| Cross feed: | 24 feeds from 0,014-0,222 mm/rev.<br>0,0006-0,009 inch/rev. | |

Floor space requirement

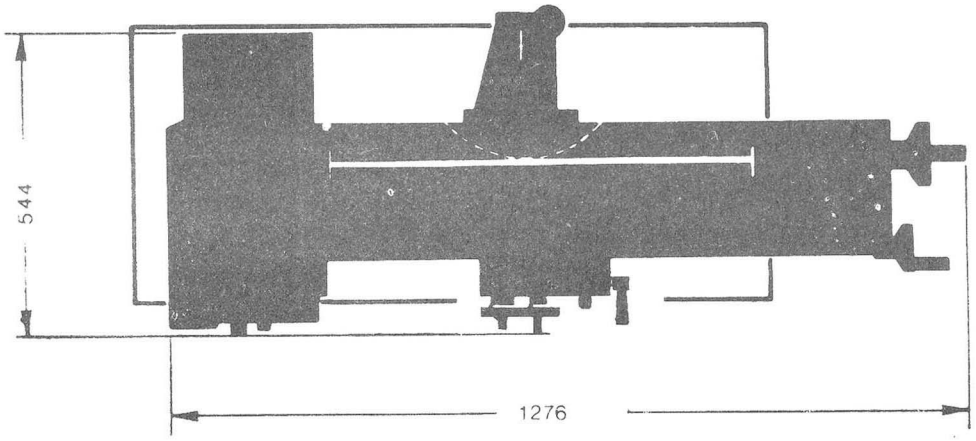


All other dimensions as Maximat V 10 (see page 8-9)

## 3. CONTROLS

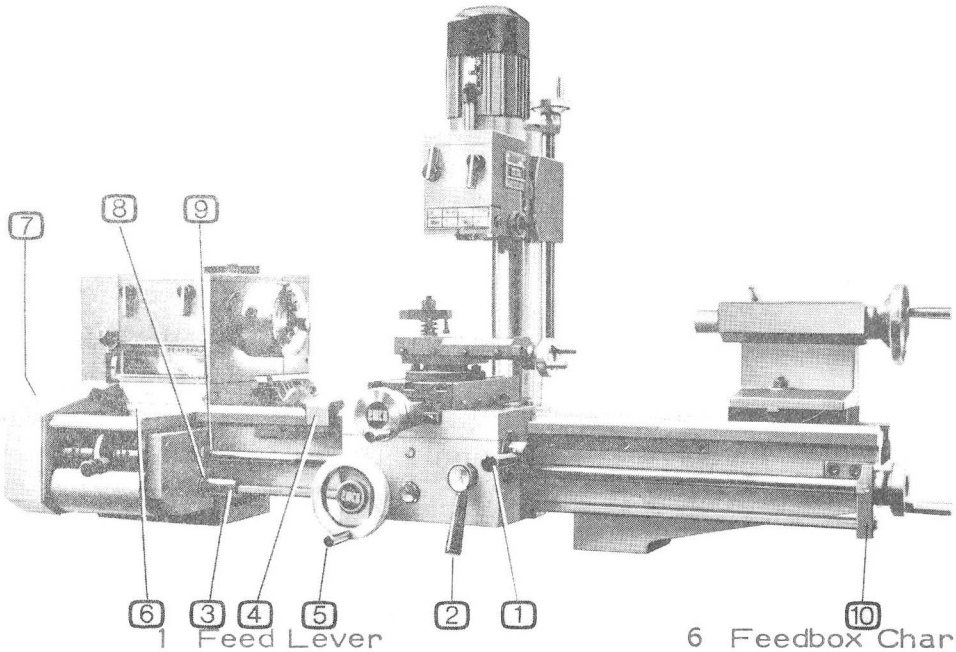


1 Feed Lever
2 Leadscrew Nut Lever
3 Safety Slipping Clutch
4 Bed Stop
5 Saddle Traverse Handwheel
6 Feedbox Chart
7 Push-pull Knob
8 Feedshaft Shear Pin
9 Leadscrew Shear Pin
10 Tail End Bracket

**ATTENTION !** When feeding No. 7 must be pushed in.

Used of Feed Lever

Longitudinal Power Feed:

Selecting Feed: pull lever out and move upwards, holding lever out.

Stopping Feed: move lever downwards, don't pull it outwards, and it will automatically drop into the neutral position.

Cross Power Feed:

Selecting Feed: pull lever out, and move it downwards until it reaches the stop.

Stopping Feed: pull lever up, don't pull it outwards, and it will automatically drop into the neutral position.

Use of Leadscrew Nut Lever

Moving the lever to the left causes the half nut to engage with the leadscrew.

Screwcutting is carried out in the same way as on the Maximat V 10 (see page 21).

## Turning using the Bed Stop

### Setting the Stop

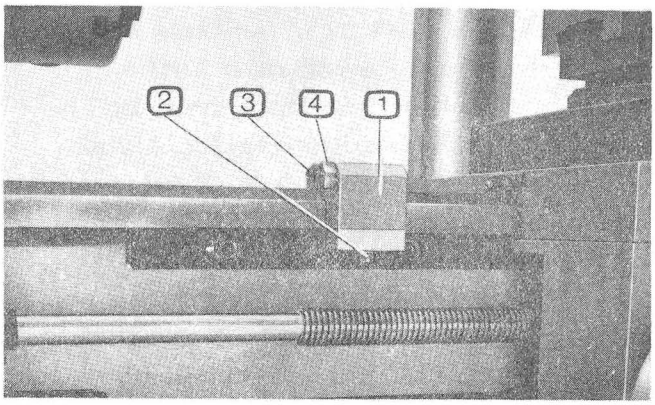


Loosen hexagon headscrew (2), slide stop (1) along bed to desired position, tighten hexagon headscrew (2). Fine adjustment can be made with the grub screw. (3), and this screw can be locked using locknut (4). In use the saddle will strike the bed stop, the safety clutch will slip, and the saddle stops.

### Feed Chart

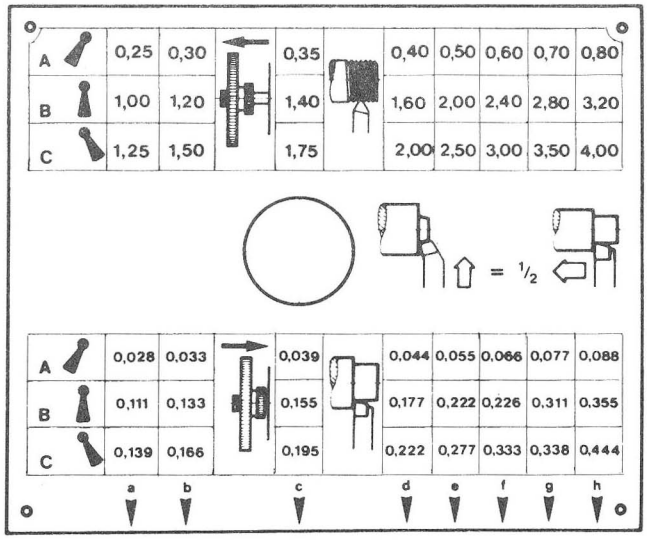


There are two tables on the feed chart each divided in 3 rows horizontally, and 8 columns vertically. Each row A, B or C is related to a position of the top eever, and each column a-h lines up with a position of the swinging lever on the front face of the gearbox.

When screwcutting each of the 24 screw pitches shown on the chart can be obtained by setting the lever in the corresponding positions.

In addition the push-pull knob (page 7 no. 21) must be in the pulled out position.

When powerfeeding each of the 24 speeds (mm/rev or inches/rev) is selected in a similar way, and the push-pull knob must be in the pushed in position.

## ATTENTION!

Cross feeds are half the feed rates shown on the feed chart.

e. g. Lever positions A d = 0,044 mm/rev.
1 Actual cross feed rate = 0,022 mm/rev.

A symbol in the centre or the feed chart is designed as a reminder that cross feed is 1/2 longitudinal feed, and this applies also when milling with milling attachment.

## 4. MAINTENANCE

The traverse pinion grease nipple (Maximat lubrication chart, Pos. 14) is on the left side of the saddle.
The apron is lubricated for life

### Adjustment of slipping clutch

Every clutch is preset at the factory. If required the clutch can be readjusted in the following way:

Using a special 2-pin spanner, turn the adjusting screw in the clutch body, about 90° clockwise. Check the adjustment by running the saddle into the bed stop under power. Repeat the adjustment as necessary until the required slipping torque is reached.

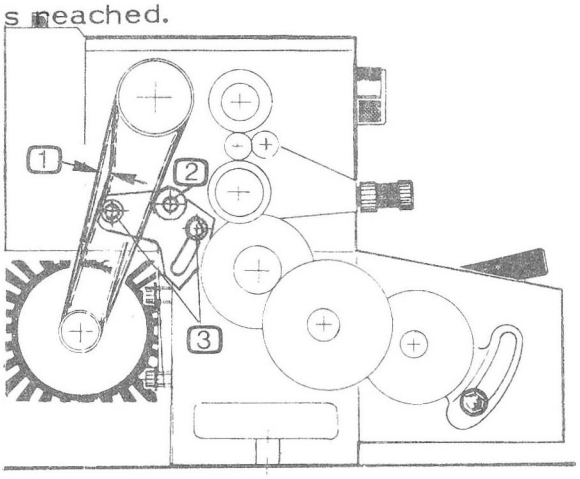


### Adjustment of the timing belt drive

When correctly adjusted the belt should deflect about 6-8mm, when moved by hand (1).

To increase belt tension the idler (2) must be adjusted. This is done by loosening the 2 sockets screws (3), swinging the idler (2) in against the belt, and retightening the 2 socket screws. After adjusting check the belt tension again.

### Adjustment of half nut dovetails

Loosen the two hexagon leadscrews (1) on the back side of the apron, then turn grub screw (2) until the two half nuts are free of play in their dovetails. Finally retighten the two hexagon headscrews (1).

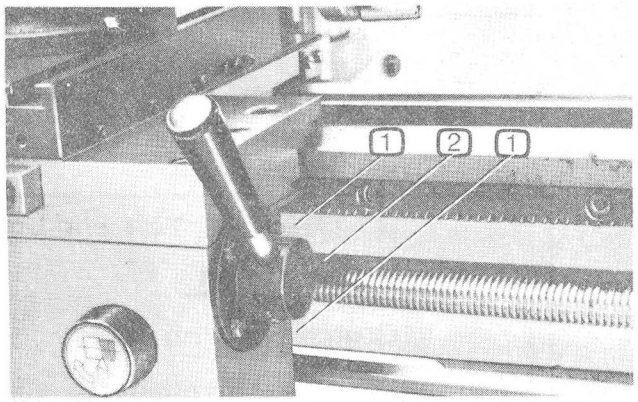


### Adjustment of end float in half nuts

Loosen locknut 1 and screw grubscrew (2) outwards, until with the half nuts engaging the leadscrew all free play and endfloat has been taken out. Retighten locknut.

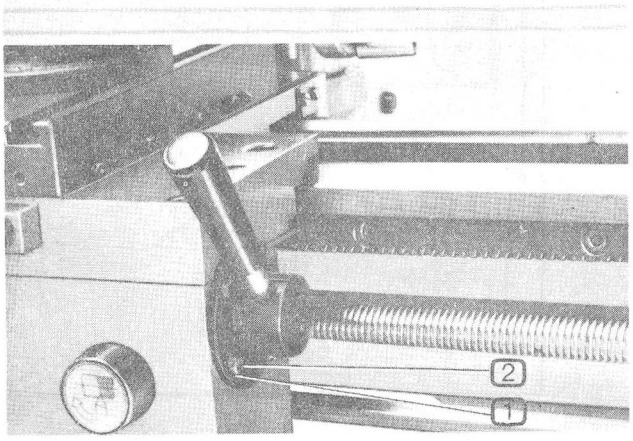

## Adjustment of saddle, Cross slide and compound slide

This is carried out in the same way as on the Maximat V10 (see page 30/31). Note that the Emco name plates in the handwheel bosses must be removed.

## Replacement of shear pins in leadscrew and feedshaft

If these shear pins become broken due to overload or abuse they can be easily replaced.

**ATTENTION!** Do ensure that only Original Emco pins are fitted.

### Leadscrew shear pin replacement

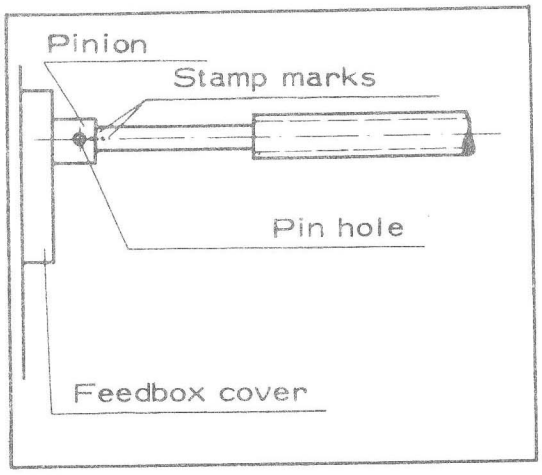


In order to knock out a broken pin, it is first necessary to line up the pin holes between leadscrew and feedbox pinion. To make this easy these two parts have been stamped and the stamp marks line up when the pin holes are in line. Knock out the broken pin with a 3mm punch, and then fit a new replacement shear pin.

### Feedshaft shear pin replacement

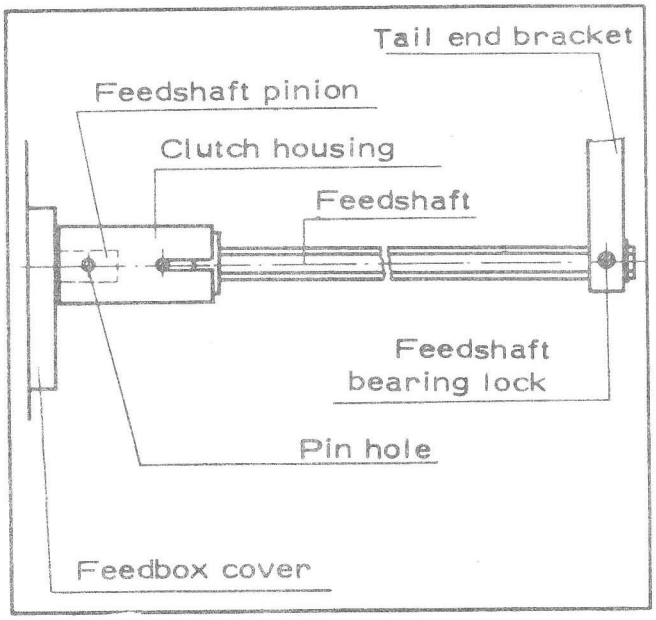


When changing a broken feedshaft pin observe the following:
Loosen the tail end bearing.
Slide the feedshaft, bearing and clutch housing to the right.
Knock out the pin with a 3mm punch.
Replace clutch housing, line up pin hole, fit new shear pin.
Slide feedshaft and bearing back into position.
Tighten tail end bearing.

# INDEX


| | | | |
|---|---|---|---|
| Grundausstattung | Tools | Equipement de base | 1, 2 |
| Drehmaschinenbett | Lathe bed | Banc de tour | 3, 4, 5 |
| Wendeherz | Gear train holder | Coeur de renversement | 6 |
| Spindelstock | Headstock | Poupée fixe | 7, 8 |
| Nortongetriebe M | Quick change gearbox M | Boite Norton M | 9, 10, 11 |
| Nortongetriebe Ww | Quick change gearbox Ww | Boite Norton Ww | 12, 13, 14 |
| Schloßkasten | Apron | Tablier | 15, 16 |
| Normalschere M | Standard quadrant M | Lyre normale M | 17, 18 |
| Normalschere Ww | Standard quadrant Ww | Lyre normale Ww | 17, 18 |
| Längs - und Quersupport | Saddle and Cross Slide | Trainard et Chariot transversal | 19, 20 |
| Obersupport | Compound slide | Chariot superieur | 21, 22 |
| Reitstock | Tailstock | Poupée mobile | 23, 24 |
| E-Gehäuse | E-housing | Boite électrique | 25, 26 |
| Motor für Drehmaschine | Motor for headstock | Moteur du tour | 27,28 |
| Riemenspanner | Tensioning roller | Rouleau tendeur | 29 |
| E-Einschub | Slide - in electrical unit | Tiroir électrique | 30, 31, 32 |
| Universalschere M | Quadrant M | Lyre universelle M | 33, 34 |
| Universalschere Ww | Quadrant Ww | Lyre universelle Ww | 33, 34 |
| Rädersatz | Set of change gears | Jeu d'engrenages | 33, 34 |
| Vierfachstahlhalter | 4-way tool post | Tourelle carrée porte-outils | 35, 36 |
| Rollkörner | Revolving center | Pointe tournante | 35, 36 |
| Gewindeuhr | Thread dial indicator | Indicateur de filetage | 35, 36 |
| Lauflünette | Travelling steady | Lunette à suivre | 37, 38 |
| Stehlünette | Fixed steady | Lunette fixe | 37, 38 |
| Spannzangenhalter | Collet attachment | Dispositif de serrage pour pinces | 39, 40 |
| Schnellspannfutter | Quick action collet chuck | Mandrin à serrage rapide | 39, 40 |
| Maschinenschraubstock | Machine vice | Etau-machine | 41, 42 |
| Schraubstock - Untersatz | Swivel base | Base rotative | 41, 42 |
| Teilapparat | Dividing head | Appareil diviseur | 43, 44 |
| Supportschleifapparat | Tool post grinder | Dispositif d'affûtage sur support | 45, 46 |
| Maschinenständer | Machine stand | Montant | 47, 48 |
| Späneschutz | Chip guard | Pare-copeaux | 49 |
| Plananschlag | Facing stop | Butée transversale | 50 |
| Motor für Vertikalvorrichtung | Motor for vertical attachment | Moteur du dispositif vertical | 51, 52 |
| Vertikalvorrichtung | Vertical attachment | Colonne verticale | 53, 54, 55, 56 |

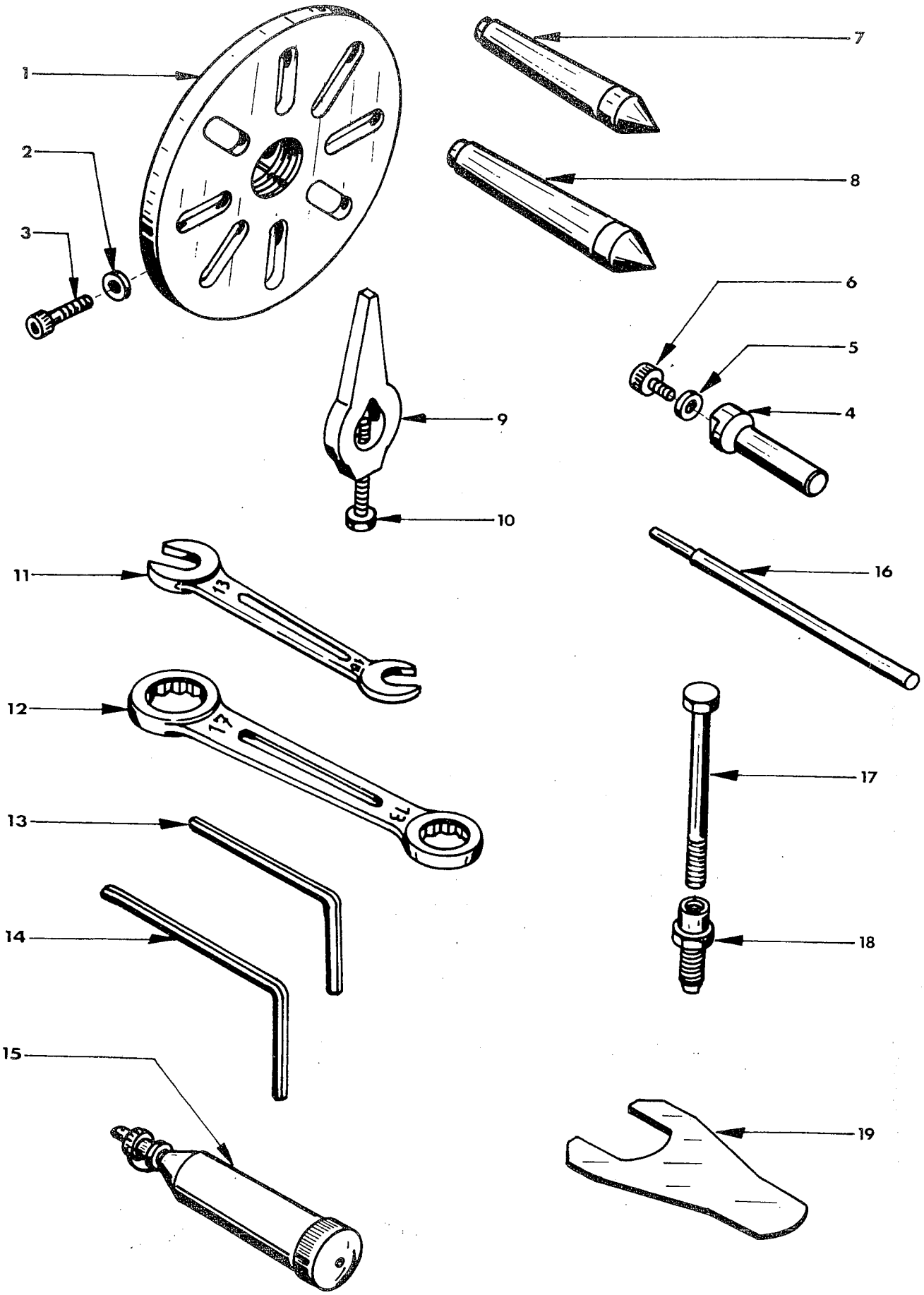
1
2
3
7
8
6
5
4
9
10
11
13
16
12
17
13
17
13
14
18
15
19

| Pos | Ref. No. | DIN | | Grundausstattung<br>BENENNUNG | Tools<br>DESCRIPTION | Equipment de base<br>DESIGNATION |
|---|---|---|---|---|---|---|
| | B4A 120 000 | | | G. Mitnehmerscheibe | Face plate | Plateau de tour |
| 1 | B4A 120 010 | | | Mitnehmerscheibe | Face plate | Plateau de tour |
| 2 | ZMU 34 0800 | | | Sechskantmutter | Nut | Ecrou hexagonal |
| 3 | ZSR 39 0820 | | | Stiftschraube | Stud | Goujon filetee |
| 4 | B2A 000 420 | | | Körnerspitze MK 2 | Centre MT 2 | Pointe fixe CM 2 |
| 5 | B2A 000 460 | | | Körnerspitze MK 3 | Centre MT 3 | Pointe fixe CM 3 |
| | B2A 130 000 | | | Gr. Drehherz | Lathe dog | Toc de tour |
| | B2A 130 010 | | | Drehherz | Lathe dog | Toc de tour |
| | ZSR 33 0840 | M8x40 DIN 933 | | Sechskantschraube | Hexagon screw | Vis 6 pans |
| 9 | B2A 140 000 | | | Gr. Mitnehmer | Holding bolt | Entraineur |
| 10 | B2A 140 010 | | | Mitnehmerbolzen | Holding bolt | Entraineur de toc |
| 11 | ZMU 34 0800 | M8 DIN 934 | | Mutter | Nut | Ecrou hexagonal |
| 12 | ZSB 25 0840 | B8,4 DIN 125 | | Scheibe | Washer | Rondelle plate |
| 13 | A2Y 030 010 | | | Sechskantstiftschlüssel | Hexagonal key | Clé à six pans |
| 14 | ZWZ 11 0600 | | | Sechskantstiftschlüssel | Hexagonal key | Clé à six pans |
| 15 | ZWZ 95 1310 | | | Doppelmaulschlüssel | Open-ended spanner | Clé plate simple |
| 16 | ZWZ 37 1713 | | | Doppel-Ringschlüssel | Ring spanner | Clé double à oeil |
| 17 | ZWZ 99 0012 | | | Kleinfettpresse | Grease gun | Pompe de graissage |
| | | | | **Vertikalvorrichtung** | **Vertical attachment** | **Colonne vertical** |
| 18 | E1A 000 310 | | | Abdrückstift | Pin | Goupille |
| 19 | E1A 000 300 | | | Anzugschraube | Draw bar | Vis de tension |
| 20 | E1A 000 210 | | | Reduzierschraube | Sleeve | Vis pour tige de rappel |
| 21 | E1A 000 320 | | | Schlüssel | Key wrench | Clé de broche |

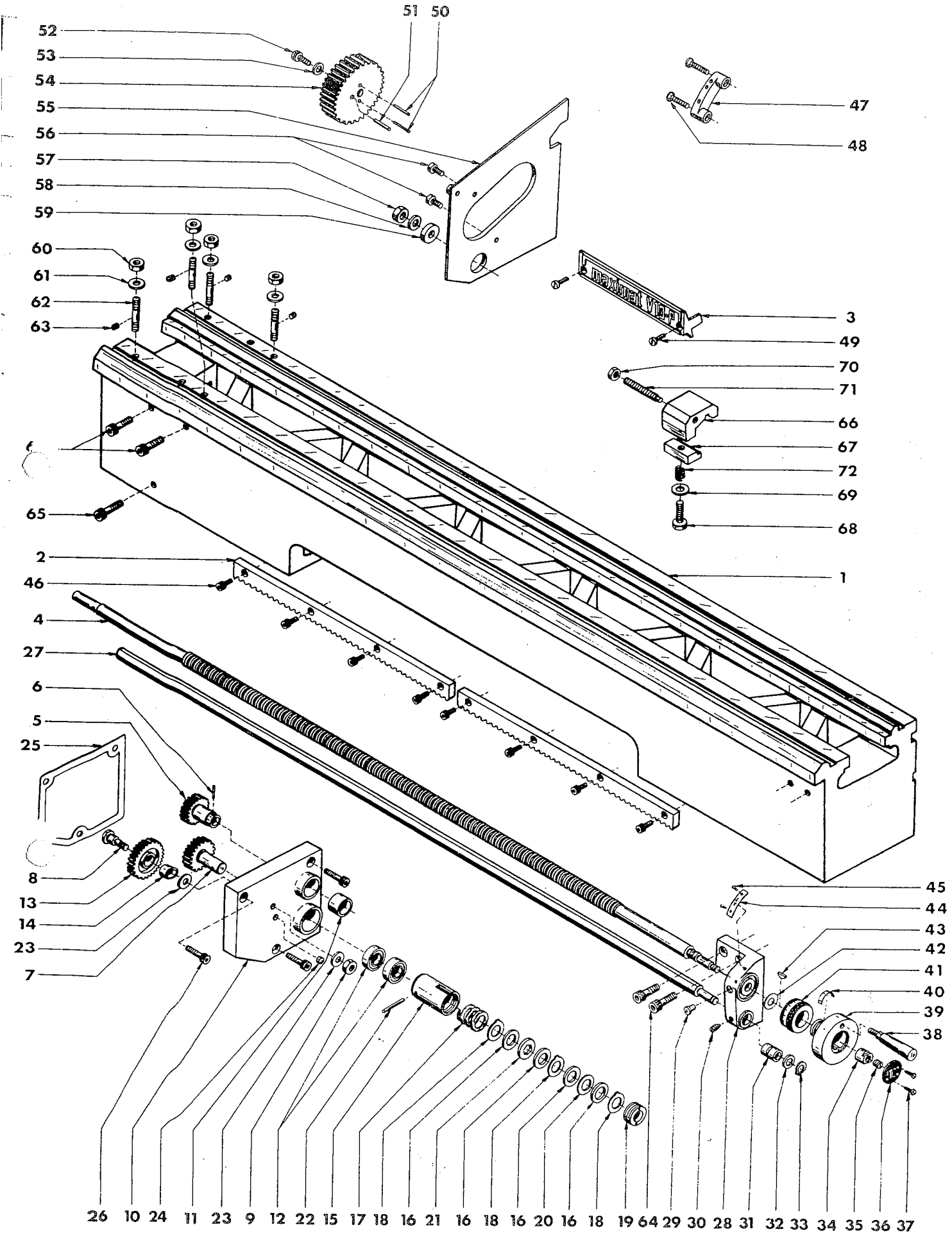
51 50
52
53
54
55
56
57
58
59
60
61
62
63
47
48
3
49
70
71
66
67
72
69
68
65
2
46
1
4
27
6
5
25
8
13
14
23
7
45
44
43
42
41
40
39
38
26 10 24 11 23 9 12 22 15 17 18 16 21 16 18 16 20 16 18 19 64 29 30 28 31 32 33 34 35 36 37

| | | | | Drehmaschinenbett | Lathe bed | Banc de tour |
|---|---|---|---|---|---|---|
| Pos | Ref. No. | DIN | | BENENNUNG | DESCRIPTION | DÉSIGNATION |
| 1 | C4A 000 031 | | | Bett | Bed | Banc |
| 2 | C4A 000 081 | | | Zahnstange | Rack | Crémaillère |
| 3 | C4A 000 011 | | | Firmenschild | Name plate | Plaquette nominale |
| | C4A 090 000 | | | G. Leitspindel M | Lead screw M | Vis mère M |
| | C4B 090 000 | | | G. Leitspindel Ww | Lead scre Ww | Vis mère Ww |
| 4 | C3A 090 010 | | | Leitspindel M | Lead screw M | Vis mère M |
| | C3B 090 010 | | | Leitspindel Ww | Lead screw Ww | Vis mère Ww |
| | C3A 090 020 | | | Leitspindelzahnrad M | Lead screw drive gear M | Pignon de vis mère M |
| 5 | C4B 090 010 | | | Leitspindelzahnrad Ww | Lead screw drive gear Ww | Pignon de vis mère Ww |
| 6 | C4A 090 010 | | | Scherstift | Shear pin | Goupille de cisaillement |
| | C4A 200 000 | | | G. Trägereinheit M | Support unit M | Support agregat M |
| | C4B 200 000 | | | G. Trägereinheit Ww | Support unit Ww | Support agregat Ww |
| | C4A 000 021 | | | Zugspindelzahnrad M | Feed shaft gear M | Engrenage M |
| 7 | C4B 000 021 | | | Zugspindelzahnrad Ww | Feed shaft gear Ww | Engrenage Ww |
| 8 | C4A 000 040 | | | Lagerbolzen | Bearing bolt | Boulon axe |
| 9 | ZMU 34 0800 | M8 DIN 934 | | Sechskantmutter | Hexagonal nut | Ecrou 6 pans |
| | C4A 150 001 | | | G. Spindelträger | Bearing block | Palier de vis mère |
| 10 | C4A 150 011 | | | Spindelträger | Bearing block | Palier de vis mère |
| | C3A 150 020 | | | Zylinderlager | Cylindrical bearing | Palier cylindrique |
| 12 | ZLG 60 0201 | 6002-Z | | Rillenkugellager | Ball bearing | Roulement à billes |
| | C4A 170 000 | | | G. Zwischenrad M | Gear M | Engrenage M |
| | C4B 170 000 | | | G. Zwischenrad Ww | Gear Ww | Engrenage Ww |
| 13 | C4A 170 010 | | | Zwischenrad M | Gear M | Engrenage M |
| | C4B 170 010 | | | Zwischenrad Ww | Gear Ww | Engrenage Ww |
| 14 | C4A 013 020 | | | Lagerbüchse | Bush | Douille |
| | C4A 180 001 | | | G. Kupplung | Clutch | Embrayage |
| 15 | C4A 180 011 | | | Kupplungsgehäuse | Clutch housing | Cage d'embrayage |
| 16 | C4A 180 020 | | | Kupplungsscheibe | Clutch plate | Rondelle d'embrayage |
| 17 | C4A 180 030 | | | Druckfeder | Spring | Ressort de compression |
| 18 | C4A 180 040 | | | Scheibe | Washer | Rondelle |
| 19 | C4A 180 050 | | | Einstellring | Setting ring | Bague de reglage |
| 20 | C4A 180 060 | | | Mitnehmerscheibe | Carrier plate | Disque entraineur |
| 21 | C4A 180 070 | | | Zentrierscheibe | Locating disc | Disque de centrage |
| 22 | C4A 000 150 | | | Scherstift | Shear pin | Goupille de cisaillement |
| 23 | ZSB 25 0840 | B8,4 DIN 125 | | Scheibe | Washer | Rondelle |
| 24 | ZDK 43 0800 | | | Verschlußdeckel | Cover | Bouchon plate |
| | C4A 000 170 | | | Dichtring | Oil seal | Joint d'etanchéité |
| 26 | ZSR 12 0625 | M6x25 DIN 912 | | Innensechskantschraube | Socket head screw | Vis 6 pans creux |
| 27 | C4A 000 050 | | | Zugspindel | Feed shaft | Barre de chariotage |
| 28 | C4A 000 070 | | | Spindellager | Bearing block | Palier de vis mère |
| 29 | ZNP 01 2000 | | | Schmiernippel | Grease nipple | Graisseur |
| 30 | ZST 53 0508 | | | Gewindestift | Set screw | Vis pointeau |
| 31 | C4A 000 060 | | | Zylinderlager | Cylindrical bearing | Palier cylindrique |
| 32 | ZSB 14 1000 | 10 DIN 1440 | | Scheibe | Washer | Rondelle |
| 33 | ZRG 71 1010 | 10x1 DIN 471 | | Sicherungsring | Retaining ring | Anneau de retenue |
| 34 | B2A 000 100 | | | Mutter | Nut | Ecrou |
| 35 | ZST 51 0806 | M8x6 | | Gewindestift | Set screw | Contre vis sans tête |
| 36 | C4A 020 060 | | | Firmenschild | Name plate | Ecusson EMCO |
| 37 | ZSR 14 0266 | BM2,6x6 DIN 7513 | | Gewindeschneidschraube | Threadenting screw | Vis onto tarandante |
| 38 | C3A 042 000 | | | G. Kegelgriff | Handle | Manette |
| 39 | C4A 020 040 | | | Handrad | Hand wheel | Volant |
| 40 | B2A 000 080 | | | Bogenfeder | Spring | Ressort réglage |
| 41 | C3A 000 090 | | | Skalenring M | Graduated dial M | Vernier M |

| | | | | Drehmaschinenbett | Lathe bed | Banc de tour |
|---|---|---|---|---|---|---|
| Pos | Ref.No. | DIN | | BENENNUNG | DESCRIPTION | DÉSIGNATION |
| | C3B 000 090 | | | Skalenring Ww | Graduated dial Ww | Vernier Ww |
| 42 | C3A 020 060 | | | Anlaufscheibe | Spacer | Rondelle disque |
| 43 | ZFD 88 0337 | 3x3,7 DIN6888 | | Scheibenfeder | Key | Clavette demi-lune |
| 44 | C3A 040 070 | | | Skalenschild M | Plate M | Plaquette repère du vernier M |
| | B2B 040 030 | | | Skalenschild Ww | Plate Ww | Plaquette repere du vernier Ww |
| 45 | ZNA 76 0144 | 1,4x4 DIN 1476 | | Kerbnagel | Rivet | Rivet tête ronde |
| 46 | ZSR 12 0616 | M6x16 DIN 912 | | Innensechskantschraube | Socket head screw | Vis six pans creux |
| 47 | C3A 000 210 | | | Herzraste | Positioning bracket | Secteur cranté du levier de renversement |
| 48 | ZSR 63 0520 | M5x20 DIN 963 | | Senkschraube | Flat head screw | Vis tête fraisée |
| 49 | ZSR 84 0510 | M5x10 DIN 84 | | Zylinderschraube | Round head screw | Vis tête cylindrique |
| 50 | ZHL 81 0324 | 3x24 DIN 1481 | | Spannhülse | Spring pin | Goupille fendue |
| 51 | ZHL 81 0424 | 4x24 DIN 1481 | | Spannhülse | Spring pin | Goupille fendue |
| 52 | ZSR 12 0612 | M6x12 DIN 912 | | Innensechskantschraube | Socket head screw | Vis six pans creux |
| 53 | ZSB 25 0640 | B6,4 DIN 125 | | Scheibe | Washer | Rondelle |
| 54 | C3A 000 220 | | | Doppelrad | Gear | Engrenage |
| 55 | 3A 000 110 | | | Deckplatte | Cover plate | Flanc du couvercle latéral |
| 56 | ZSR 84 0512 | M5x12 DIN 84 | | Zylinderschraube | Round head screw | Vis tête cylindrique |
| 57 | ZMU 34 1000 | M10 DIN 934 | | Sechskantmutter | Hexagonal nut | Ecrou 6 pans |
| 58 | ZSB 25 1050 | B10,5 DIN 125 | | Scheibe | Washer | Rondelle |
| 59 | C3A 000 170 | | | Zwischenring | Spacer ring | Entretoise |
| 60 | ZMU 34 0800 | M8 DIN 934 | | Sechskantmutter | Nut | Ecrou 6 pans |
| 61 | ZSB 25 0840 | B8,4 DIN 125 | | Scheibe | Washer | Rondelle |
| 62 | C4A 000 240 | | | Stiftschraube | Stud | Goujons filetée |
| 63 | ZST 51 0506 | M5x6 DIN 551 | | Gewindestift | Set screw | Vis pointeau |
| 64 | ZSR 12 0825 | M8x25 DIN 912 | | Innensechskantschraube | Socket head screw | Vis 6 pans creux |
| 65 | ZSR 12 0830 | M8x30 DIN 912 | | Innensechskantschraube | Socket head screw | Vis 6 pans creux |
| | C4A 190 000 | | | G. Anschlag | Stop | Butée |
| 66 | C4A 190 010 | | | Anschlag | Stop | Butée |
| 67 | C4A 190 020 | | | Klemmleiste | Gib | Lardon de blocage |
| 68 | ZSR 33 0825 | M8x25 DIN 933 | | Sechskantschraube | Hexagonal screw | Vis 6 pans |
| 69 | ZSB 25 0840 | B8,4 DIN 125 | | Scheibe | Washer | Rondelle |
| 70 | ZMU 34 0800 | M8 DIN 934 | | Sechskantmutter | Hexagonal nut | Ecrou 6 pans |
| 71 | ZST 19 0850 | M8x50 DIN 417 | | Gewindestift | Set screw | Vis pointeau |
| 72 | 1B 000 140 | | | Vorlastfeder | Spring | Ressort |

| | C4A 060 000 | | | G. Wendeherz | Gear train holder | Coeur de renversement |
|---|---|---|---|---|---|---|
| Pos | Ref. No. | DIN | | BENENNUNG | DESCRIPTION | DÉSIGNATION |
| 1 | C3A 060 010 | | | Wendeherz | Gear train holder | Corps de l'inverseur |
| 2 | C3A 060 020 | | | Wendebolzen | Shaft | Pivote de l'inverseur |
| 3 | C4A 060 030 | | | Herzbolzen | Shaft | Boulon-axe |
| 4 | C4A 060 010 | | | Wenderad | Gear | Engrenage de renversement |
| 5 | C3A 060 050 | | | Herzrad z = 50 | Gear 50 teeth | Engrenage du coeur z = 50 |
| 6 | C3Z 011 060 | | | Wechselrad z = 45 | Change gear 45 teeth | Engrenage interchangeable z=45 |
| | C4A 062 000 | | | G. Rastenstift | Positioning pin | Index de crantage |
| 7 | C4A 062 010 | | | Rastenstift | Positioning pin | Index de crantage |
| 8 | C4A 062 020 | | | Rastenhülse | Guide bush | Fourreau-guide |
| 9 | C3A 062 030 | | | Rastengriff | Knurled knob | Bouton moletée |
| 10 | C3A 062 040 | | | Druckfeder | Spring | Ressort de compression |
| 11 | ZHL 81 0258 | 2,5x18 DIN 1481 | | Spannhülse | Spring pin | Goupille fendue |
| 12 | C4A 060 020 | | | Anlaufscheibe | Washer | Rondelle plate |
| 13 | ZMU 34 0800 | M8 DIN 934 | | Sechskantmutter | Hexagonal nut | Ecrou 6 pans |
| 14 | ZMU 34 0600 | M6 DIN 934 | | Sechskantmutter | Hexagonal nut | Ecrou 6 pans |
| 15 | ZRG 27 0060 | A6 DIN 127 | | Federring | Spring washer | Rondelle Grower |
| 16 | ZHL 81 0318 | 3x18 DIN 1481 | | Spannhülse | Spring pin | Goupille fendue |
| 17 | ZNP 01 1000 | | | Schmiernippel | Grease nipple | Graisseur |
| 18 | ZLG 78 1010 | HK 1010 | | Nadelhülse | Needle bearing | Roulement à aiguilles |
| 19 | C3A 020 040 | | | Anlaufscheibe 0,1 | Shim 0,1 | Rondelle-disque 0,1 |
| | C3A 020 050 | | | Anlaufscheibe 0,2 | Shim 0,2 | Rondelle-disque 0,2 |
| | C3A 020 060 | | | Anlaufscheibe 0,3 | Shim 0,3 | Rondelle-disque 0,3 |
| 20 | ZSB 21 0840 | A8,4 DIN 9021 | | Scheibe | Washer | Rondelle plate |
| 21 | ZSR 63 0508 | M5x8 DIN 963 | | Senkschraube | Flat head screw | Vis tête fraisée |

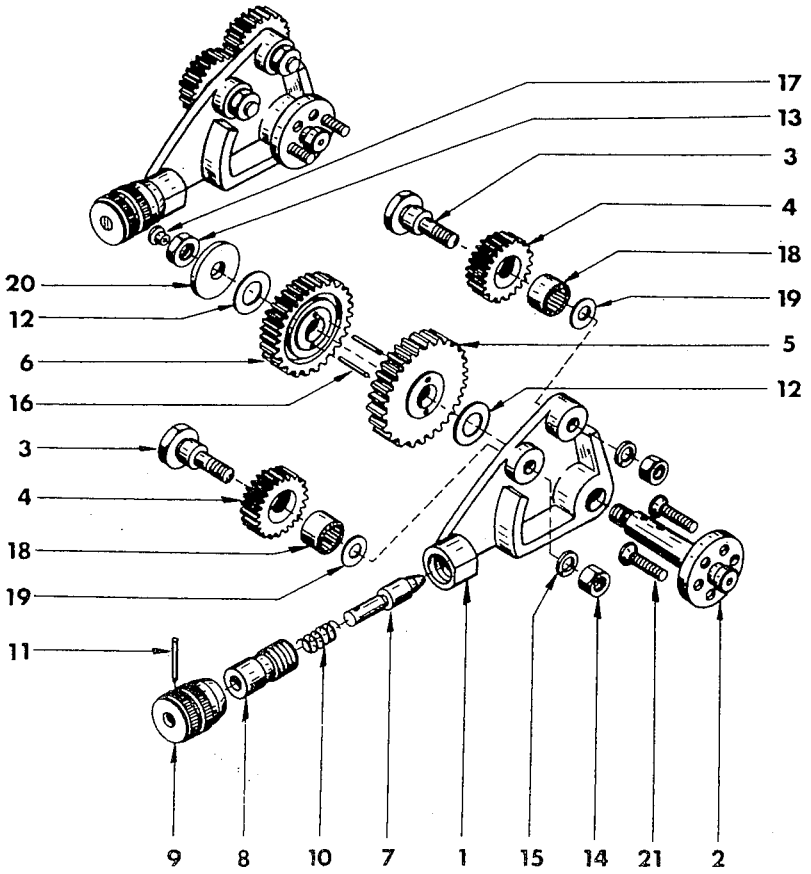

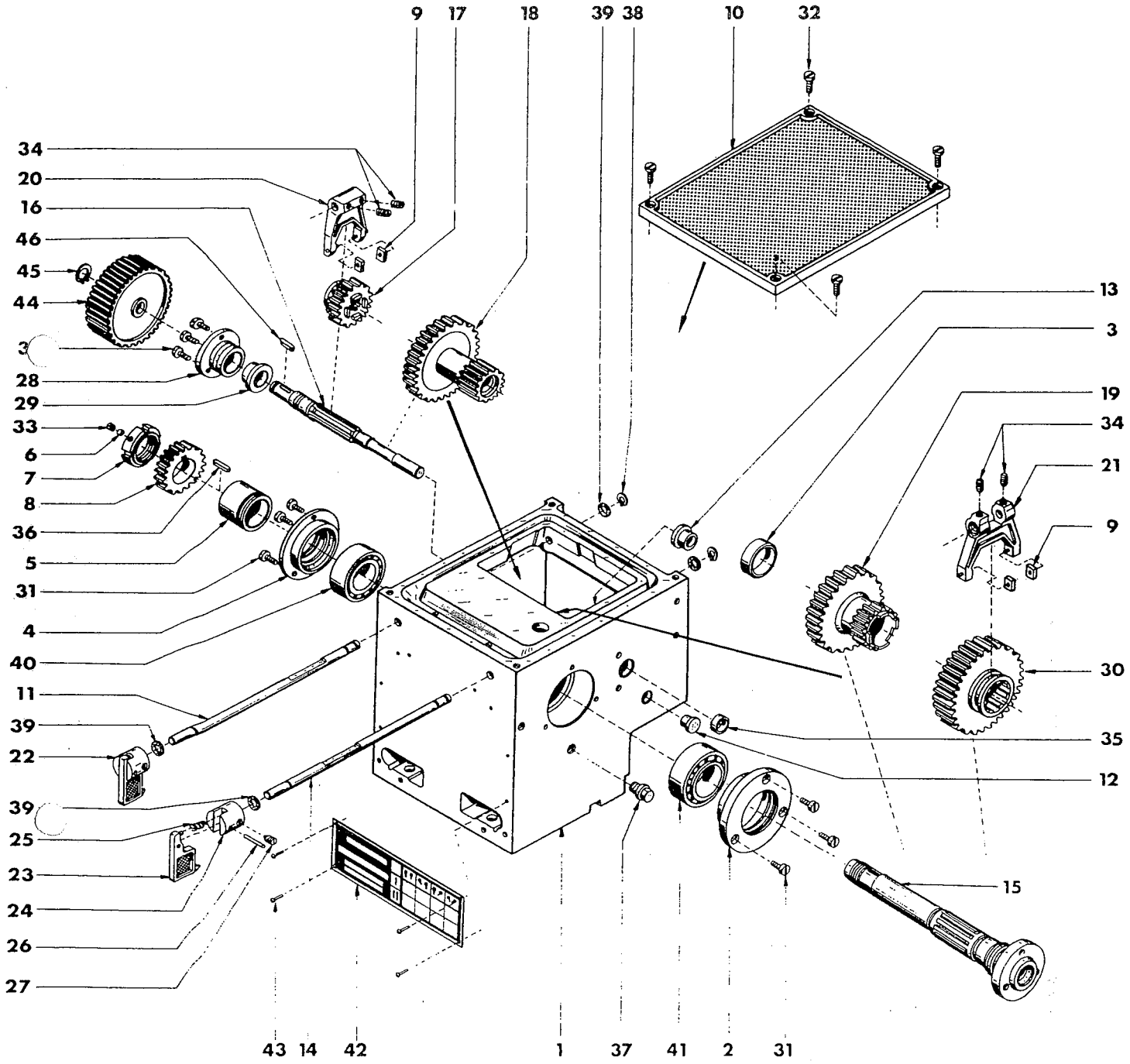
9
17
18
39
38
10
32
34
20
16
46
45
44
3
28
29
33
6
7
8
36
5
31
4
40
11
39
22
39
25
23
24
26
27
13
3
19
34
21
9
30
35
12
15
43
14
42
1
37
41
2
31

| | | | | | | |
|---|---|---|---|---|---|---|
| | C4A 030 000 | | | G. Spindelstock M | Headstock M | Poupée fixe M |
| | C4D 030 000 | | | G. Spindelstock CH | Headstock CH | Poupée fixe CH |
| Pos | Ref.No. | DIN | | BENENNUNG | DESCRIPTION | DÉSIGNATION |
| 1 | C4A 030 010 | | | Spindelstock | Headstock | Poupée fixe |
| 2 | B2A 030 020 | | | Lagerdeckel 84 | Bearing cover 84 | Flasque de roulement 84 |
| 3 | B2A 030 030 | | | Zwischenring | Spacing collar | Entretoise |
| 4 | B2A 030 040 | | | Lagerdeckel 76 | Bearing cover 76 | Flasque de roulement 76 |
| 5 | C3A 030 010 | | | Dichtring | Oil seal | Anneau-joint en feutre |
| 6 | B2A 030 060 | | | Druckscheibe | Disc | Pastille de pointeau |
| 7 | B2A 030 070 | | | Spannmutter | Lock nut | Ecrou cannelé |
| 8 | C3A 030 020 | | | Zahnrad 50 | Gear 50 | Engrenage 50 |
| 9 | B2A 030 090 | | | Gleitstein | Sliding pad | Patin du baladeut |
| 10 | B2A 030 100 | | | Deckplatte | Cover plate | Couvercle du carter de pupée |
| 11 | B2A 030 110 | | | Schaltstange 1 | Gear lever shaft 1 | Tige de commande 1 |
| 12 | B2A 030 120 | | | Ölstandsauge | Oil level window | Voyant d'huile |
| 13 | B2A 030 130 | | | Bundlager | Journal bearing | Palier |
| 14 | B2A 030 140 | | | Schaltstange 2 | Gear lever shaft 2 | Tige de commande 2 |
| 15 | B4F 030 160 | | | Spindel M | Spindle M | Broche principale M |
| | B4G 030 160 | | | Spindel CH | Spindle CH | Broche principale CH |
| [illegible] | B2A 030 171 | | | Getriebewelle | Shaft | Arbre primaire |
| [illegible]7 | B2A 030 180 | | | Schaltrad 28 | Gear 28 | Pignon baladeur 28 |
| 18 | B2A 031 000 | | | G. Zahnradblock 56/23 | Gear wheel 56/23 | Pignon double 56/23 |
| 19 | B2A 032 000 | | | G. Zahnradblock 56/28 | Gear wheel 56/28 | Pignon double 56/28 |
| 20 | B2A 033 000 | | | G. Schaltgabel 1 | Selector shift fork lever 1 | Fourchette 1 |
| 21 | B2A 034 000 | | | G. Schaltgabel 2 | Selector shift fork lever 2 | Fourchette 2 |
| 22 | B2A 035 000 | | | G. Schalthebel | Shift lever | Manette seule |
| 23 | B2A 035 010 | | | Schalthebel | Shift lever | Manette seule |
| 24 | B2A 035 020 | | | Schaltnabe | Boss | Moyeu de manette |
| 25 | B2A 010 080 | | | Druckfeder | Spring | Ressort de compression |
| 26 | ZHL 81 0322 | 3x22 DIN 1481 | | Spannhülse | Spring pin | Goupille fendue |
| 27 | ZST 16 0608 | AM 6x8 DIN 916 | | Gewindestift | Grub screw | Vis pointeau |
| | B2A 036 000 | | | G. Lagerdeckel | Bearing cover | Flasque de roulement |
| 28 | B2A 036 010 | | | Lagerdeckel | Bearing cover | Flasque de roulement |
| 29 | B2A 036 020 | | | Bundbüchse | Lay shaft bearing | Douille de palier |
| 30 | B2A 037 000 | | | G. Zahnradblock | Gear wheel | Pignon |
| 31 | ZSR 84 0508 | M5x8 DIN 84 | | Zylinderschraube | Flat head screw | Vis tête cylindrique |
| 32 | ZSR 84 0512 | M5x12 DIN 84 | | Zylinderschraube | Flat head screw | Vis tête cylindrique |
| [illegible]3 | ZST 17 0405 | M4x5 DIN 417 | | Gewindestift | Grub screw | Vis pointeau |
| [illegible]4 | ZST 16 0508 | AM5x8 DIN 916 | | Gewindestift | Grub screw | Vis pointeau |
| 35 | ZDK 43 1800 | DIN 443 | | Verschlußdeckel | Cover | Bouchon de palier |
| 36 | ZFD 85 3316 | A3x3x16 DIN 6885 | | Paßfeder | Key | Clavette |
| 37 | ZSR 10 1010 | M10x1 DIN 910 | | Verschlußschraube | Oil drain plug | Bouchon de vidange |
| 38 | ZRG 71 0808 | 8x0,8 DIN 471 | | Sicherungsring | Circlip | Circlips |
| 39 | ZRG 00 5800 | RS5x8 | | Rundschnurring | Grommet | Rondelle torique caoutchouc |
| 40 | ZLG 32 0066 | 32006 XC/P6 | | Kegelrollenlager | Taper roller bearing | Roulement à rouleaux coniques |
| 41 | ZLG 32 0076 | 32007 XC/P6 | | Kegelrollenlager | Taper roller bearing | Roulement à rouleaux coniques |
| 42 | C3A 000 230 | | | Drehzahlschild | Spindle speed plate | Plaquette indicatrice |
| 43 | ZNA 76 0144 | 1,4x4 DIN 1476 | | Kerbnagel | Rivet | Rivet tête ronde |
| 44 | C3A 100 011 | | | Riemenscheibe 40/50Hz | Pulley 40/50Hz | Poulie crantée 40/50Hz |
| | C3B 100 011 | | | Riemenscheibe 42/60Hz | Pulley 42/60Hz | Poulie crantée 42/60Hz |
| 45 | ZRG 71 1310 | 13x1 DIN 471 | | Sicherungsring | Circlip | Circlips |
| 46 | ZFD 85 4416 | A4x4x16 DIN 6885 | | Paßfeder | Key | Clavette |

| | C4A 070 000 | | | G. Nortongetriebe M | Quick change gearbox M | Boite Norton M |
|---|---|---|---|---|---|---|
| Pos | Ref.No. | DIN | | BENENNUNG | DESCRIPTION | DÉSIGNATION |
| 1 | C4A 070 010 | | | Nortongehäuse | Gearbox housing | Carter de la boite Norton |
| 2 | C3A 070 020 | | | Stiftschraube | Stud | Goujon |
| 3 | C3A 070 030 | | | Gleitstein | Sliding pad | Patin |
| 4 | C3A 070 050 | | | Kupplungsritzel | Coupling gear | Pignon-crapot femelle |
| 5 | C3A 070 060 | | | Kupplungszahnrad | Coupling gear | Engrenage-crapot femelle |
| 6 | C3A 070 070 | | | Schiebezahnrad | Coupling gear | Pignon baladeur crapot mâle |
| 7 | C3A 070 080 | | | Ritzel | Gear | Engrenage |
| 8 | C3A 070 090 | | | Kulisse | Front cover | Secteur cranté |
| 9 | C3A 070 100 | | | Distanzhülse | Bushing | Entretoise |
| | C3A 071 000 | | | G. Schiebewelle | Shaft | Arbre du baladeur |
| 10 | C3A 071 010 | | | Schiebewelle | Shaft | Arbre du baladeur |
| 11 | C3A 071 020 | | | Scherträger | Quadrant mount | Palier porte-lyre |
| 12 | C3A 071 031 | | | Stützring | Bush | Douille de palier |
| 13 | ZFD 85 5550 | A5x5x50 DIN 6885 | | Paßfeder | Key | Clavette d'entrainement |
| 14 | ZHL 81 0310 | 3x10 DIN 1481 | | Spannhülse | Spring pin | Goupille fendue |
| 15 | ZHL 81 0316 | 3x16 DIN 1481 | | Spannhülse | Spring pin | Goupille fendue |
| 16 | ZHL 81 0420 | 4x20 DIN 1481 | | Spannhülse | Spring pin | Goupille fendue |
| 17 | ZLG 62 0004 | 6200 - 2RS | | Rillenkugellager | Ball bearing | Roulement à billes |
| | ZRG 13 3012 | 130x1,2V | | Seeger-V-Ring | Circlip | Circlips |
| | C4A 072 001 | | | G. Schwinge | Gear positioning lever | Levier coulissant/basculant |
| 19 | C4A 072 011 | | | Schwinge | Gear positioning lever | Levier coulissant/basculant |
| 20 | C4A 072 040 | | | Schlepprad 30 | Gear 30 | Pignon baladéur 30 |
| 21 | C3A 060 050 | | | Herzrad 50 | Gear 50 | Engrenage baladéur 50 |
| 22 | C3A 072 030 | | | Herzbolzen | Stub shaft | Boulonaxe |
| 23 | C3A 072 040 | | | Keil | Key | Clavette coulissant |
| | C4A 062 000 | | | G. Rastenstift | Positioning pin | Index de crantage |
| 24 | C4A 062 010 | | | Rastenstift | Positioning pin | Index de crantage |
| 25 | C4A 062 020 | | | Rastenhülse | Guide bush | Fourreau-guide |
| 26 | C3A 062 030 | | | Rastengriff | Knurled knob | Bouton moleté |
| 27 | C3A 062 040 | | | Druckfeder | Spring | Ressort de compression |
| 28 | ZHL 81 0258 | 2,5x18 DIN 1481 | | Spannhülse | Spring pin | Goupille fendue |
| 29 | ZHL 81 0305 | 3x5 DIN 1481 | | Spannhülse | Spring pin | Goupille fendue |
| 30 | ZRG 71 2212 | 22x1,2 DIN 471 | | Sicherungsring | Circlip | Circlips |
| 31 | ZRG 27 0060 | | | Federring | Spring washer | Rondelle Grower |
| 32 | ZMU 34 0600 | M6 DIN 934 | | Sechskantmutter | Hexagonal nut | Ecrou 6 pans |
| 33 | ZLG 78 2816 | HK 2816 | | Nadelhülse | Needle bearing | Roulement à aiguilles |
| 34 | ZLG 86 2217 | IR22x28x17 | | Ring | | |
| | C4A 072 030 | | | Anlaufscheibe | Shim | Rondelle disque |
| | C4A 073 000 | | | G. Gehäusedeckel | Gearbox cover | Couvercle de la Boite Norton |
| 36 | C4A 073 010 | | | Gehäusedeckel | Gearbox cover | Couvercle de la Boite Norton |
| 37 | C4A 073 020 | | | Schalthebel | Gear selector | Doigt du baladeur |
| 38 | C4A 073 030 | | | Schaltbolzen | Lever shaft | Pivot de la manette |
| 39 | C4A 073 040 | | | Steigungsschild | Feed chact | Tableau des filetages & avances |
| 40 | C3A 010 070 | | | Griffbolzen | Shaft | Goujon de la manette |
| 41 | C3A 160 080 | | | Rastenfeder | Spring | Ressort de compression |
| 42 | ZHL 81 0320 | 3x20 DIN 1481 | | Spannhülse | Spring pin | Goupille |
| 43 | ZFD 93 2001 | 20x10,2x0,9 DIN 2093 | | Tellerfeder | Spring | Rondelle cuvette |
| 44 | ZNA 76 0204 | 2x4 DIN 1476 | | Kerbnagel | Rivet | Rivet tête ronde |
| 45 | ZGF 37 0224 | | | Handgriff | Handle | Manette |
| 46 | ZKG 00 1040 | 4GK3 DIN 5401 | | Stahlkugel | Ball | Bille acier |
| | C3A 074 000 | | | G. Stufenwalze | Shaft | Arbre porte-pignons et engrenage |
| 47 | C3A 074 010 | | | Stufenwelle | Shaft | Arbre porte-pignons et engrenage |

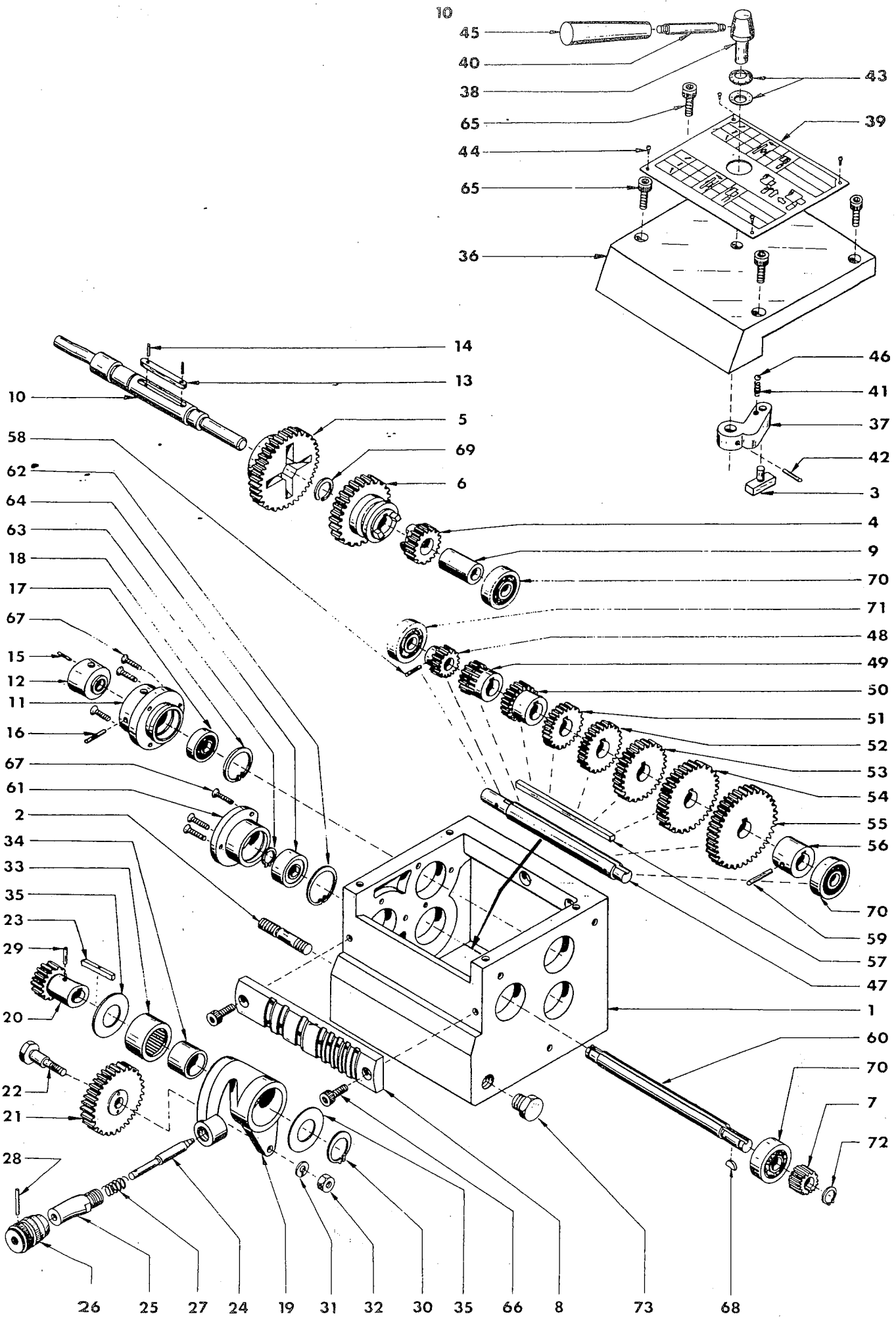
45
40
38
65
44
65
36
43
39
46
41
37
42
3
14
13
10
5
69
6
58
62
64
63
18
17
67
15
12
11
16
67
61
2
34
33
35
23
29
20
22
21
28
4
9
70
71
48
49
50
51
52
53
54
55
56
70
59
57
47
1
60
70
7
72
26
25
27
24
19
31
32
30
35
66
8
73
68

| | C4A 070 000 | | | G. Nortongetriebe M | Quick change gearbox M | Boite Norton M |
|---|---|---|---|---|---|---|
| Pos | Ref.No. | DIN | | BENENNUNG | DESCRIPTION | DESIGNATION |
| 48 | C3A 074 020 | | | Stufenrad 20 | Gear 20 | Pignon 20 |
| 49 | C3A 074 030 | | | Stufenrad 24 | Gear 24 | Pignon 24 |
| 50 | C3A 074 040 | | | Stufenrad 28 | Gear 28 | Pignon 28 |
| 51 | C3A 074 050 | | | Stufenrad 32 | Gear 32 | Pignon 32 |
| 52 | C3A 074 060 | | | Stufenrad 40 | Gear 40 | Pignon 40 |
| 53 | C3A 074 070 | | | Stufenrad 48 | Gear 48 | Pignon 48 |
| 54 | C3A 074 080 | | | Stufenrad 56 | Gear 56 | Pignon 56 |
| 55 | C3A 074 090 | | | Stufenrad 64 | Gear 64 | Pignon 64 |
| 56 | C3A 074 100 | | | Distanzbüchse | Bushing | Entretoise d'arrêt |
| 57 | C3A 074 110 | | | Keil | Key | Clavette d'entrainement |
| 58 | ZHL 81 0316 | 3x16 DIN 1481 | | Spannhülse | Spring pin | Goupille fendue |
| 59 | ZHL 81 0324 | 3x24 DIN 1481 | | Spannhülse | Spring pin | Goupille fendue |
| | C3A 075 000 | | | G. Schwingenwelle | Tumbler shaft | Arbre du levier coulissant |
| 60 | C3A 075 010 | | | Schwingenwelle | Tumbler shaft | Arbre du levier coulissant |
| 61 | 3B 071 020 | | | Lagerdeckel | Cover | Flasque de roulement |
| 62 | RG 72 3212 | 32x1,2 DIN 472 | | Sicherungsring | Circlip | Circlips |
| 63 | ZRG 71 1210 | 12x1 DIN 471 | | Sicherungsring | Circlip | Circlips |
| 64 | ZLG 62 0102 | 6201 - 2Z | | Rillenkugellager | Ball bearing | Roulement à billes |
| 65 | ZSR 12 0616 | M6x16 DIN 912 | | Innensechskantschraube | Socket head screw | Vis 6 pans creux |
| 66 | ZSR 12 0612 | M6x12 DIN 912 | | Innensechskantschraube | Socket head screw | Vis 6 pans creux |
| 67 | ZSR 63 0416 | M4x16 DIN 963 | | Senkschraube | Flat head screw | Vis tete fraisée |
| 68 | ZFD 88 0337 | 3x3,7 DIN 6888 | | Scheibenfeder | Key | Clavette demi-lune |
| 69 | ZRG 21 0170 | WR 17 | | Sprengring | Spring ring | Rondelle segment |
| 70 | ZLG 62 0101 | 6201 - Z | | Rillenkugellager | Ball bearing | Roulement à billes |
| 71 | ZLG 63 0104 | 6301 - 2RS | | Kugellager | Ball bearing | Roulement à billes |
| 72 | ZRG 71 1210 | 12x1 DIN 471 | | Sicherungsring | Circlip | Circlips |
| 73 | ZSR 08 1415 | M14x1,5 DIN 908 | | Verschlußschraube | Hexagonal screw | Ecrou 6 pans |

| | C4B 070 000 | | | G. Nortongetriebe Ww | Quick change gear box Ww | Boite Norton Ww |
|---|---|---|---|---|---|---|
| Pos | Ref.No. | DIN | | BENENNUNG | DESCRIPTION | DÉSIGNATION |
| 1 | C4A 070 010 | | | Nortongehäuse | Gear box housing | Carter de la Boite Norton |
| 2 | C3A 070 020 | | | Stiftschraube | Stud | Goujon |
| 3 | C3A 070 030 | | | Gleitstein | Sliding pad | Patin |
| 4 | C3B 070 050 | | | Kupplungsritzel | Coupling gear | Pignon-crabot femelle |
| 5 | C3B 070 060 | | | Kupplungszahnrad | Coupling gear | Engrenage-crabot femelle |
| 6 | C3B 070 070 | | | Schiebezahnrad | Coupling gear | Pignon-baladeur-crabot-male |
| 7 | C4B 070 020 | | | Ritzel | Gear | Engrenage |
| 8 | C3B 070 090 | | | Kulisse | Front cover | Secteur cranté |
| | C3B 071 000 | | | G. Schiebewelle | Shaft | Arbre du baladeur |
| 9 | C3B 071 010 | | | Schiebewelle | Shaft | Arbre du baladeur |
| 10 | C3B 071 020 | | | Lagerdeckel | Bearing cover | Flasque de palier |
| 11 | ZFD 85 5550 | A5x5x50 DIN 6885 | | Paßfeder | Key | Clavette d'entrainement |
| 12 | ZHL 81 0310 | 3x10 DIN 1481 | | Spannhülse | Spring pin | Goupille fendue |
| 13 | ZLG 62 0102 | 6201 - 2Z | | Rillenkugellager | Ball bearing | Roulement à billes |
| 14 | ZRG 72 3212 | 32x1,2 DIN 472 | | Sicherungsring | Safety ring | Circlips |
| 15 | ZRG 71 1210 | 12x1 DIN 471 | | Sicherungsring | Safety ring | Circlips |
| | C4B 072 001 | | | G. Schwinge | Gear positioning lever | Levier coulissant/basculant |
| 16 | C4A 072 011 | | | Schwinge | Gear positioning lever | Levier coulissant/basculant |
| 17 | C4B 072 040 | | | Schlepprad 16 | Gear 16 | Pignon baladeur 16 |
| 18 | C3B 072 030 | | | Schwingenrad | Gear cover | Engrenage baladeur |
| 19 | C3A 072 030 | | | Herzbolzen | Stub shaft | Boulon-axe |
| 20 | C3A 072 040 | | | Keil | Key | Clavette coulossante |
| | C4A 062 000 | | | G. Rastenstift | Positioning pin | Index de crantage |
| 21 | C4A 062 010 | | | Rastenstift | Positioning pin | Index de crantage |
| 22 | C4A 062 020 | | | Rastenhülse | Guide bush | Fourreau-guide |
| 23 | C3A 062 030 | | | Rastengriff | Knurled knob | Bouton moleté |
| 24 | C3A 062 040 | | | Druckfeder | Spring | Ressort de compression |
| 25 | ZHL 81 0258 | 2,5x18 DIN 1481 | | Spannhülse | Spring pin | Goupille fendue |
| 26 | ZHL 81 0305 | 3x5 DIN 1481 | | Spannhülse | Spring pin | Goupille fendue |
| 27 | ZRG 71 2212 | 22x1,2 DIN 471 | | Sicherungsring | Circlip | Circlips |
| 28 | ZRG 27 0060 | A6 DIN 127 | | Federring | Spring washer | Rondelle Grower |
| 29 | ZMU 34 0600 | M6 DIN 934 | | Sechskantmutter | Hexagonal nut | Ecrou 6 pans |
| 30 | ZLG 78 2816 | HK 2816 | | Nadelhülse | Needle bearing | Roulement à aiguilles |
| 31 | ZLG 86 2217 | IR 22x28x17 | | Ring | | |
| 32 | C4A 072 030 | | | Anlaufscheibe | Shim | Rondelle disque |
| | C4B 073 000 | | | G. Gehäusedeckel | Gearbox Cover | Couvercle de la Boite Norton |
| 33 | C4A 073 010 | | | Gehäusedeckel | Gearbox Cover | Couvercle de la Boite Norton |
| | C4B 073 020 | | | Schalthebel | Gear selector | Doigt du baladeur |
| 35 | C4A 073 030 | | | Schaltbolzen | Lever shaft | Pivot de la manette |
| 36 | C4B 073 040 | | | Steigungsschild | Thread and feed plate | Tableau des filetages et avances |
| 37 | C3A 010 070 | | | Griffbolzen | Shaft | Goujon de la manette |
| 38 | C3A 160 080 | | | Rastenfeder | Spring washer | Ressort de compression |
| 39 | ZHL 81 0320 | 3x20 DIN 1481 | | Spannhülse | Spring pin | Goupille fendue |
| 40 | ZFD 93 2001 | 20x10,2x0,9 | | | | |
| | | DIN 2093 | | Tellerfeder | Spring washer | Rondelle cuvette |
| 41 | ZNA 76 0204 | 2x4 DIN 1476 | | Kerbnagel | Rivet | Rivet tête ronde |
| 42 | ZGF 37 0224 | | | Handgriff | Handle | Manette |
| 43 | ZKG 00 1040 | 4GK3 DIN 5401 | | Stahlkugel | Ball | Bille acier |
| | C3B 074 000 | | | G. Stufenwalze | Shaft | Arbre porte-pignons |
| 44 | C3A 074 010 | | | Stufenwelle | Shaft | Arbre porte-pignons |
| 45 | C3A 074 110 | | | Keil | Key | Clavette d'entrainement |
| 46 | ZHL 81 0316 | 3x16 DIN 1481 | | Spannhülse | Spring pin | Goupille fendue |
| 47 | ZHL 81 0324 | 3x24 DIN 1481 | | Spannhülse | Spring pin | Goupille fendue |

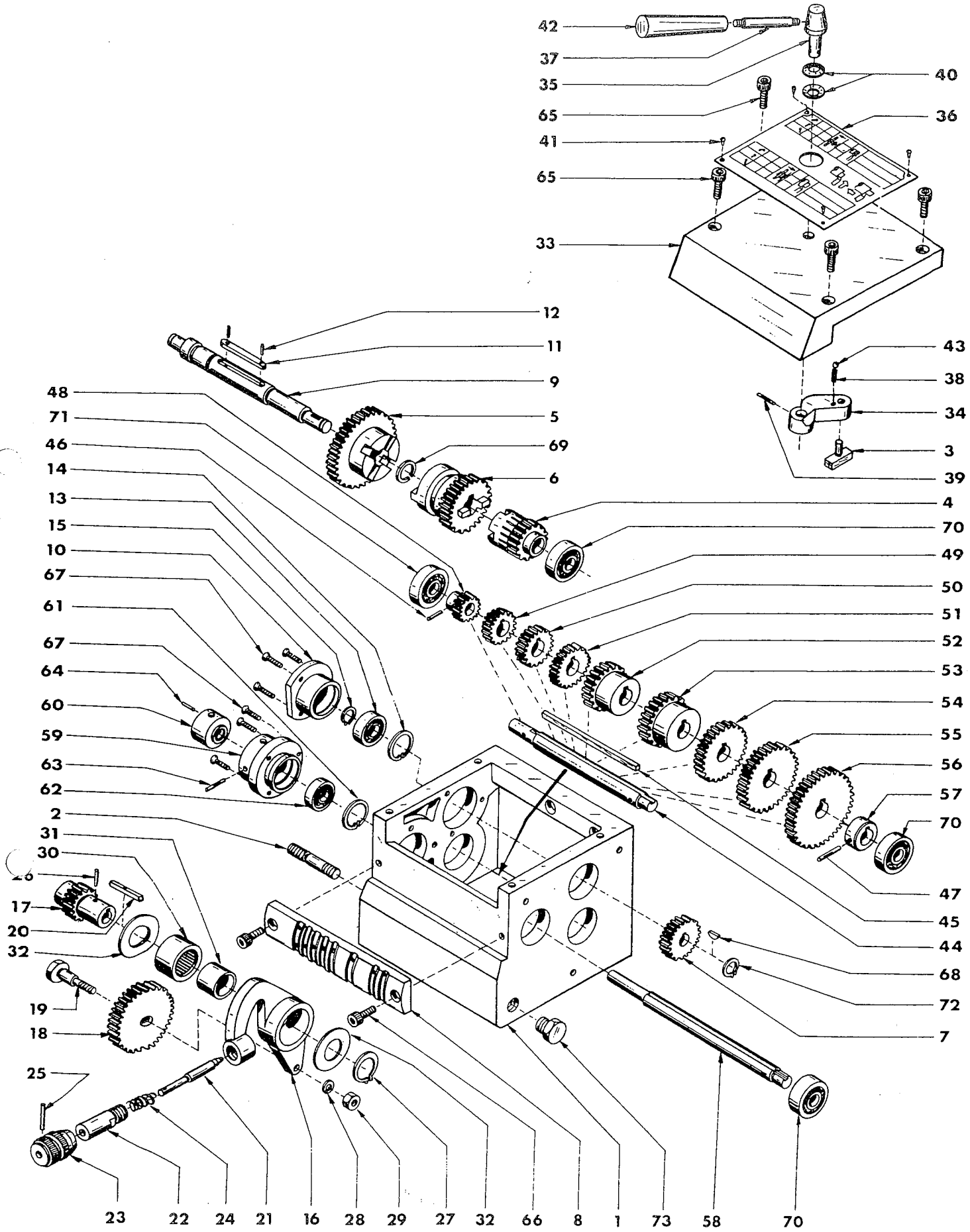
42
37
35
65
41
65
33
40
36
12
11
9
5
69
6
4
70
49
50
51
52
53
54
55
56
57
70
47
45
44
68
72
7
43
38
34
3
39
48
71
46
14
13
15
10
67
61
67
64
60
59
63
62
2
31
30
26
17
20
32
19
18
25
23
22
24
21
16
28
29
27
32
66
8
1
73
58
70

| | C4B 070 000 | | | G. Nortongetriebe Ww | Quick-change gear box Ww | Boite Norton Ww |
|---|---|---|---|---|---|---|
| Pos | Ref.No. | DIN | | BENENNUNG | DESCRIPTION | DESIGNATION |
| 48 | C3B 074 010 | | | Stufenrad 16 | Gear 16 | Pignon 16 |
| 49 | C3B 074 020 | | | Stufenrad 18 | Gear 18 | Pignon 18 |
| 50 | C3B 074 030 | | | Stufenrad 19 | Gear 19 | Pignon 19 |
| 51 | C3B 074 040 | | | Stufenrad 20 | Gear 20 | Pignon 20 |
| 52 | C3B 074 050 | | | Stufenrad 22 | Gear 22 | Pignon 22 |
| 53 | C3B 074 060 | | | Stufenrad 24 | Gear 24 | Pignon 24 |
| 54 | C3B 074 070 | | | Stufenrad 26 | Gear 26 | Pignon 26 |
| 55 | C3B 074 080 | | | Stufenrad 28 | Gear 28 | Pignon 28 |
| 56 | C3B 074 090 | | | Stufenrad 32 | Gear 32 | Pignon 32 |
| 57 | C3B 074 100 | | | Distanzbüchse | Bush | Entretoise |
| | C3B 075 000 | | | G. Schwingenwelle | Shaft | Arbre du levier coulissant |
| 58 | C3B 075 010 | | | Schwingenwelle | Shaft | Arbre du levier coulissant |
| 59 | C3A 071 020 | | | Scherträger | Quadrant mount | Palier porte-lyre |
| 60 | C3A 071 031 | | | Stützring | Bush | Douille de palier |
| 61 | ZRG 13 3012 | J30x1,2V | | Seeger V Ring | Circlip | Circlips |
| [illegible] | ZLG 62 0004 | 6200 - 2RS | | Rillenkugellager | Ball bearing | Roulement à billes |
| [illegible] | ZHL 81 0420 | 4x20 DIN 1481 | | Spannhulse | Spring pin | Goupille fendue |
| 64 | ZHL 81 0316 | 3x16 DIN 1481 | | Spannhulse | Spring pin | Goupille fendue |
| 65 | ZSR 12 0616 | M6x16 DIN 912 | | Innensechskantschraube | Socket head screw | Vis 6 pans creux |
| 66 | ZSR 12 0612 | M6x12 DIN 912 | | Innensechskantschraube | Socket head screw | Vis 6 pans creux |
| 67 | ZSR 63 0416 | M4x16 DIN 963 | | Senkschraube | Flat head screw | Vis tête fraisée |
| 68 | ZFD 88 0337 | 3x3,7 DIN 6888 | | Scheibenfeder | Key | Clavette demi-lune |
| 69 | ZRG 21 0170 | WR17 | | Sprengring | Spring ring | Rondelle-segment |
| 70 | ZLG 62 0101 | 6201 - Z | | Rillenkugellager | Ball bearing | Roulement à billes |
| 71 | ZLG 63 0104 | 6301 - 2RS | | Kugellager | Ball bearing | Roulement à billes |
| 72 | ZRG 71 1210 | 12x1 DIN 471 | | Sicherungsring | Circlip | Circlips |
| 7[illegible] | ZSR 08 1415 | M14x1,5 DIN 908 | | Verschlußschraube | Hexagonal screw | Ecrou 6 pans |

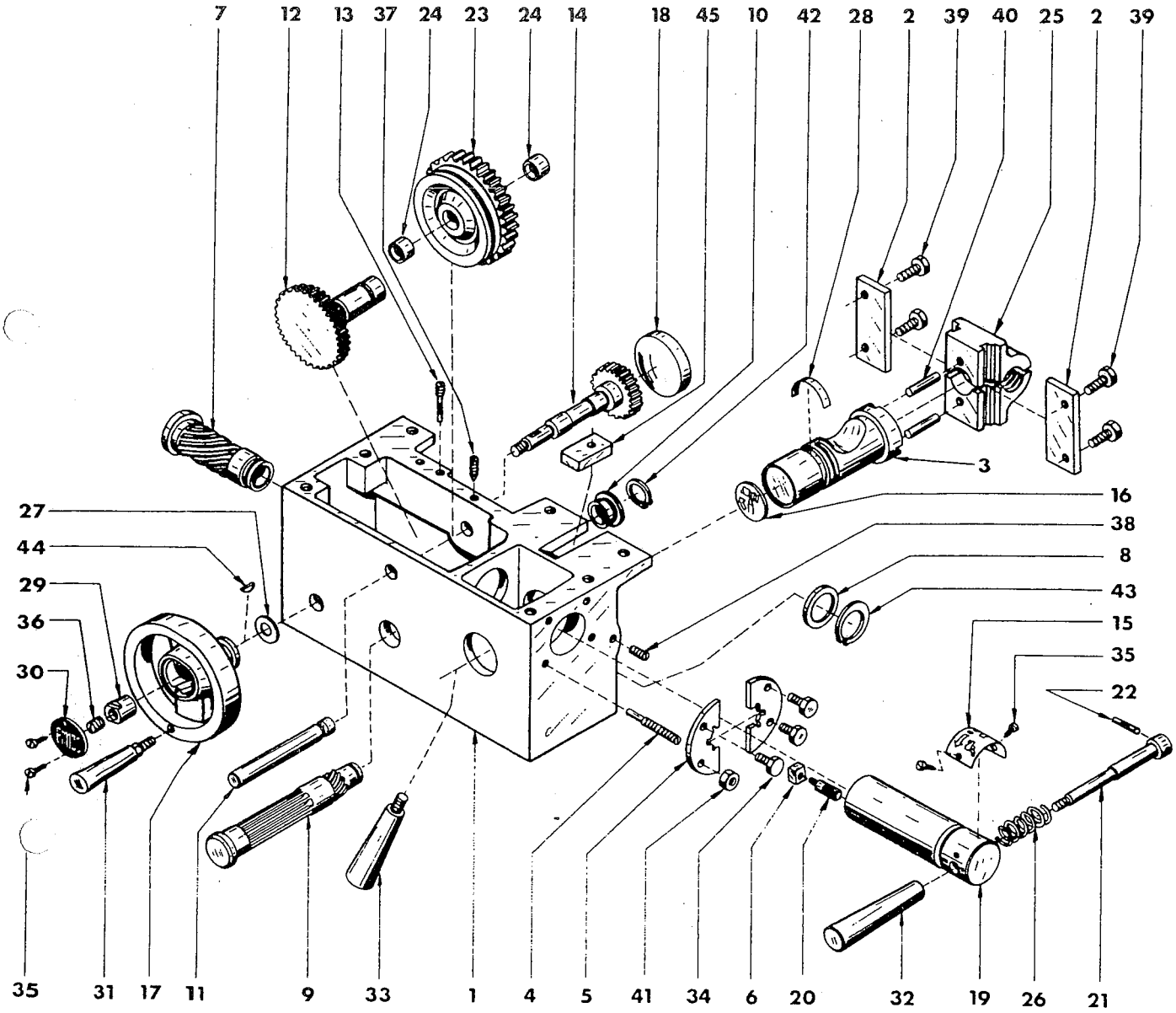
7
12
13
37
24
23
24
14
18
45
10
42
28
2
39
40
25
2
39
3
16
38
8
43
15
35
22
27
44
29
36
30
35
31
17
11
9
33
1
4
5
41
34
6
20
32
19
26
21

| | | | | | | |
|---|---|---|---|---|---|---|
| | C4A 010 000<br>C4B 010 000 | | | G. Schloßkasten M<br>G. Schloßkasten Ww | Apron M<br>Apron Ww | Tablier M<br>Tablier Ww |
| Pos | Ref. No. | DIN | | BENENNUNG | DESCRIPTION | DÉSIGNATION |
| 1 | C4A 010 010 | | | Schloßkasten | Apron | Tablier du chariot |
| 2 | C4A 010 020 | | | Führungsplatte | Guide plate | Plaquette de guidage |
| 3 | C4A 010 030 | | | Schloßmutterhebel | Handle | Axe du Levier de noix |
| 4 | C4A 010 040 | | | Einstellschraube | Adjusting screw | Vis de reglage |
| 5 | C4A 010 050 | | | Schaltkulisse | Change plate | Du selecteur |
| 6 | C4A 010 080 | | | Kulissenstein | Bearing block | Du selecteur |
| 7 | C4A 010 090 | | | Schraubenrad | Helical gear wheel | Roue helicoidale |
| 8 | C4A 010 100 | | | Anlaufscheibe | Spacer | Rondelle-disque |
| 9 | C4A 010 110 | | | Schraubenrad | Helical gear wheel | Roue helicoidale |
| 10 | C4A 010 121 | | | Anlaufbüchse | Start sleeve | Coussinet de demarrage |
| 11 | C4A 010 140 | | | Achse | Shaft | Axe |
| 12 | C4A 010 150 | | | Zahnstangenritzel | Traverse pinion | Pignon de crémaillère |
| 13 | C4A 010 160 | | | Tangentialstift | Pin | Goupille tangentielle |
| 14 | C4A 010 170 | | | Handradritzel | Shaft gear | Pignon du volant |
| 15 | C4A 010 180 | | | Funktionsschild | Function plate | Plaquette indicative de mouvements |
| [illegible] | C4A 010 190 | | | Funktionsschild | Function plate | Plaquette indicative de mouvements |
| 17 | C4A 010 200 | | | Handrad 105 Ø | Handwheel 105 Ø | Volant 105 Ø |
| 18 | C4A 010 210 | | | Verschlußdeckel | Cover plug | Bouchon |
| 19 | C4A 011 000 | | | G. Vorschubhebel | Feed lever | Levier des avances |
| | C4A 011 010 | | | Vorschubhebel | Feed lever | Levier des avances |
| 20 | C4A 011 020 | | | Bolzen | Bolt | Cheville |
| 21 | C4A 012 000 | | | G. Griffbolzen | Handle bolt | Boulon de manette |
| | C4A 012 010 | | | Griffbolzen | Handle bolt | Boulon de manette |
| 22 | ZST 73 0320 | 3x20 DIN 1472 | | Paßkerbstift | Pin | Goupille de blocage |
| 23 | C4A 013 000 | | | G. Schieberad | Sliding gear | Engrenage coulissant |
| | C4A 013 010 | | | Schieberad | Sliding gear | Engrenage coulissant |
| 24 | C4A 013 020 | | | Lagerbüchse | Bearing bush | Coussinet |
| 25 | C4A 010 060 | | | Schloßmutter M | Half nut M | Noix M |
| | C4B 010 060 | | | Schloßmutter Ww | Half nut Ww | Noix Ww |
| 26 | N1B 000 140 | | | Vorlastfeder | Coil spring | Ressort de Pression |
| 27 | C3A 020 060 | | | Anlaufscheibe | Washer | Rondelle plate |
| | B2A 000 080 | | | Bogenfeder | Spring | Lame-ressort d'arret |
| | B2A 000 100 | | | Mutter | Nut | Ecrou |
| 30 | C4A 020 060 | | | Firmenschild | Name plate | Ecusson „EMCO" |
| 31 | C3A 042 000 | | | G. Kegelgriff | Handle | Manette tournante |
| 32 | ZGF 37 0224 | | | Handgriff | Handle | Manette |
| 33 | ZGF 38 0216 | | | Kegelgriff | Handle | Manette tournante |
| 34 | ZSR 33 0512 | M5x12 DIN 933 | | Sechskantschraube | Hexagonal screw | Vis 6 pans |
| 35 | ZSR 14 0266 | BM2,6x6 DIN 7513 | | Gewindeschneidschraube | Threadening screw | Vis anto tarandante |
| 36 | ZST 51 0806 | M8x6 DIN 551 | | Gewindestift | Set screw | Contre-vis |
| 37 | ZST 53 0612 | M6x12 DIN 553 | | Gewindestift | Set screw | Contre-vis |
| 38 | ZST 51 0510 | M5x10 DIN 551 | | Gewindestift | Set screw | Contre-vis |
| 39 | ZSR 33 0616 | M6x16 DIN 933 | | Sechskantschraube | Hexagonal screw | Vis 6 pans |
| 40 | ZST 06 0624 | 6M6x24 DIN 7 | | Zylinderstift | Pin | Cheville |
| 41 | ZMU 34 0500 | M5 DIN 934 | | Sechskantmutter | Hexagonal nut | Ecrou 6 pans |
| 42 | ZRG 71 1510 | 15x1 DIN 471 | | Sicherungsring | Circlip | Circlips |
| 43 | ZRG 71 2212 | 22x1,2 DIN 471 | | Sicherungsring | Circlip | Circlips |
| 44 | ZFD 88 0337 | 3x3,7 DIN 6888 | | Scheibenfeder | Key | Clavette demi-lune |
| 45 | C4A 000 090 | | | Klemmstück | Clamp piece | Plaquette de blocage |

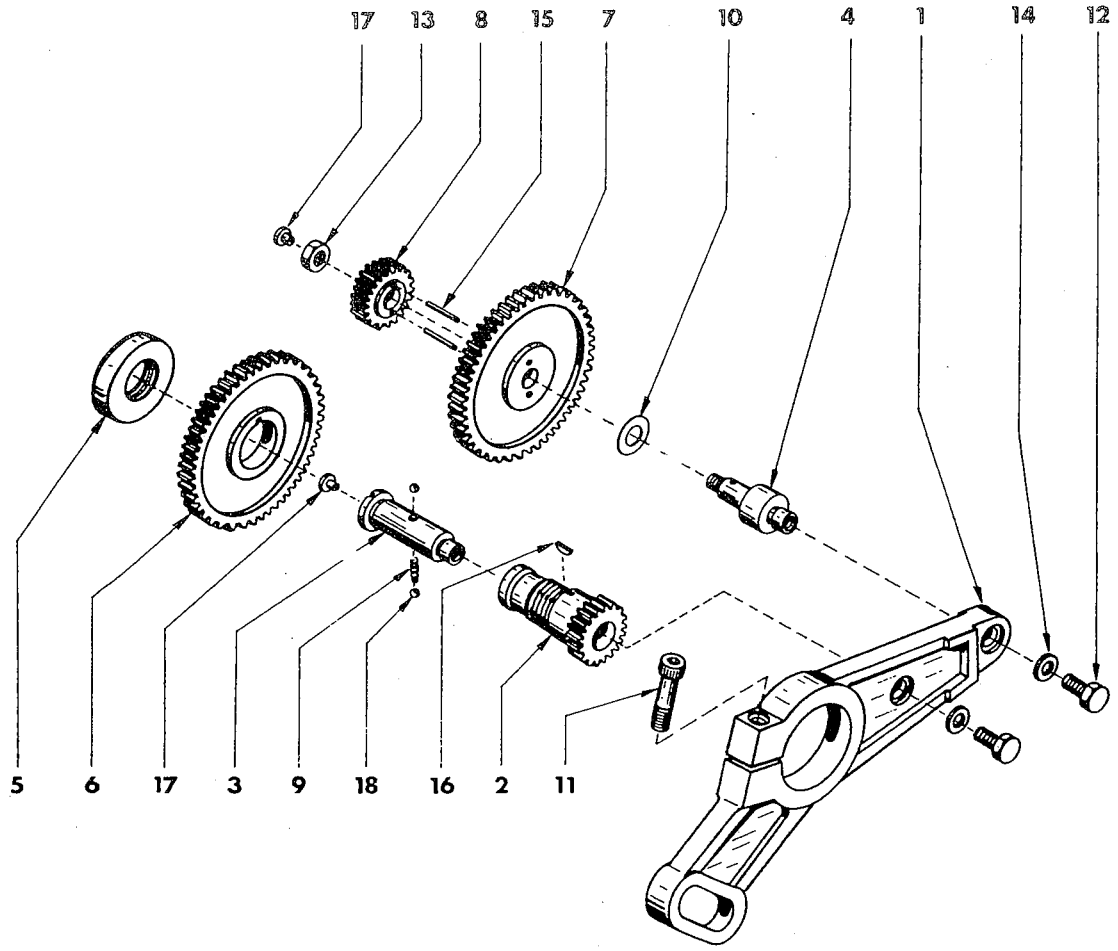
17
13
8
15
7
10
4
1
14
12
5
6
17
3
9
18
16
2
11

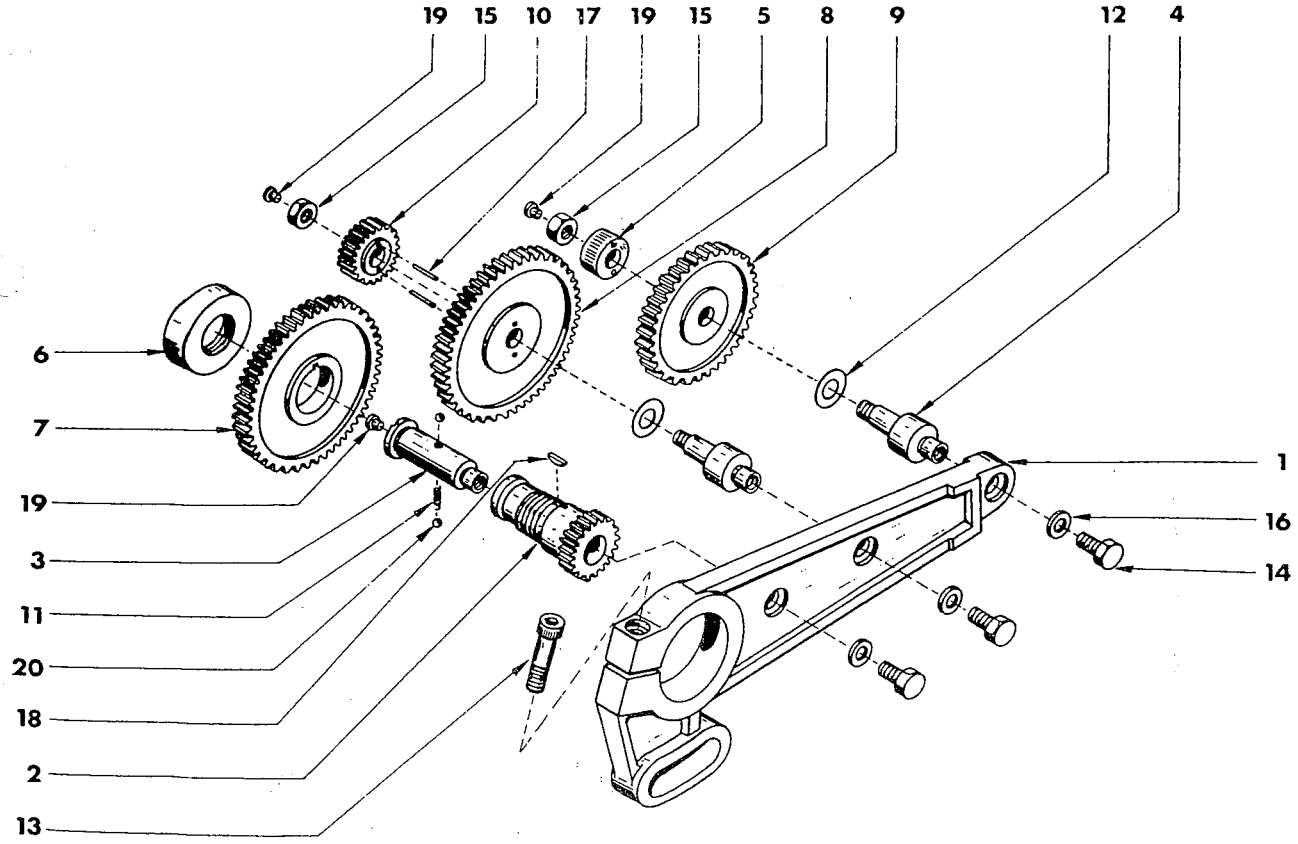
19
15
10
17
19
15
5
8
9
12
4
6
7
19
3
11
20
18
2
13
1
16
14

| | C3A 160 000 | | | Normalschere M | Standard quadrant M | Lyre normale M |
|---|---|---|---|---|---|---|
| Pos | Ref.No. | DIN | | BENENNUNG | DESCRIPTION | DÉSIGNATION |
| 1 | C3A 160 010 | | | Normalschere M | Quadrant M | Lyre nue M |
| 2 | C3A 160 020 | | | Schieberitzel | Pinion gear | Pignon coulissant |
| 3 | C3A 160 030 | | | Führungsbolzen | Shaft | Boulon-axe guide |
| 4 | C3A 160 040 | | | Zahnradbolzen | Shaft | Boulon-axe |
| 5 | C3A 160 050 | | | Spindelmutter | Threaded nut | Bague-écrou |
| 6 | C3A 160 060 | | | Schieberad | Gear | Engrenage coulissant |
| 7 | C3A 160 070 | | | Schwenkrad | Gear | Engrenage |
| 8 | C3Z 011 030 | | | Wechselrad 30 | Gear 30 | Engrenage interchangeable 30 |
| 9 | C3A 160 080 | | | Rastenfeder | Spring | Ressort de compression |
| | C3A 020 040 | | | Anlaufscheibe 0,1 | Spacer 0,1 | Rondelle disque 0,1 |
| 10 | C3A 020 050 | | | Anlaufscheibe 0,2 | Spacer 0,2 | Rondelle disque 0,2 |
| | C3A 020 060 | | | Anlaufscheibe 0,3 | Spacer 0,3 | Rondelle disque 0,3 |
| 11 | ZSR 12 0830 | M8x30 DIN 912 | | Innensechskantschraube | Socket head screw | Vis 6 pans creux |
| 12 | ZSR 33 0616 | M6x16 DIN 933 | | Sechskantschraube | Hexagonal screw | Vis 6 pans |
| 13 | ZMU 34 0800 | M8 DIN 934 | | Sechskantmutter | Hexagonal nut | Ecrou 6 pans |
| 14 | ZSB 25 0640 | B6,4 DIN 125 | | Scheibe | Washer | Rondelle plate |
| 15 | ZHL 81 0316 | 3x16 DIN 1481 | | Spannhülse | Spring pin | Goupille fendue |
| 16 | ZFD 88 0337 | 3x3,7 DIN 6888 | | Scheibenfeder | Key | Clavette demi-lune |
| 17 | ZNP 01 1000 | | | Schmiernippel | Grease nipple | Graisseur |
| 18 | ZKG 00 1040 | 4GK3 DIN 5401 | | Stahlkugel | Ball | Bille acier |

| | C3B 160 000 | | | Normalschere Ww | Standard quadrant Ww | Lyre normale Ww |
|---|---|---|---|---|---|---|
| Pos | Ref.No. | DIN | | BENENNUNG | DESCRIPTION | DÉSIGNATION |
| 1 | C3B 160 010 | | | Normalschere Ww | Quadrant Ww | Lyre nue Ww |
| 2 | C3A 160 020 | | | Schieberitzel | Pinion gear | Pignon coulissant |
| 3 | C3A 160 030 | | | Führungsbolzen | Shaft | Boulon-axe guide |
| 4 | C3A 160 040 | | | Zahnradbolzen | Shaft | Boulon-axe |
| 5 | C3B 160 020 | | | Scherhülse | Shear Bush | Entretoise |
| 6 | C3A 160 050 | | | Spindelmutter | Threading nut | Bague-écrou |
| 7 | C3A 160 060 | | | Schieberad | Gear | Engrenage coulissant |
| 8 | C3A 160 070 | | | Schwenkrad | Gear | Engrenage |
| 9 | C3B 160 030 | | | Zwischenrad | Gear | Engrenage intermédiaire |
| 10 | C3Z 011 030 | | | Wechselrad 30 | Gear 30 | Engrenage interchangeable 30 |
| 11 | C3A 160 080 | | | Rastenfeder | Spring | Ressort de compression |
| | C3A 020 040 | | | Anlaufscheibe 0,1 | Spacer 0,1 | Rondelle disque 0,1 |
| 12 | C3A 020 050 | | | Anlaufscheibe 0,2 | Spacer 0,2 | Rondelle disque 0,2 |
| | C3A 020 060 | | | Anlaufscheibe 0,3 | Spacer 0,3 | Rondelle disque 0,3 |
| 13 | ZSR 12 0830 | M8x30 DIN 912 | | Innensechskantschraube | Socket head screw | Vis 6 pans creux |
| 14 | ZSR 33 0616 | M6x16 DIN 933 | | Sechskantschraube | Hexagonal screw | Vis 6 pans |
| 15 | ZMU 34 0800 | M8 DIN 934 | | Sechskantmutter | Hexagonal nut | Ecrou 6 pans |
| 16 | ZSB 25 0640 | B6,4 DIN 125 | | Scheibe | Washer | Rondelle plate |
| 17 | ZHL 81 0316 | 3x16 DIN 1481 | | Spannhülse | Spring pin | Goupille fendue |
| 18 | ZFD 88 0337 | 3x3,7 DIN 6888 | | Scheibenfeder | Key | Clavette demi-lune |
| 19 | ZNP 01 1000 | | | Schmiernippel | Grease nipple | Graisseur |
| 20 | ZKG 00 1040 | 4GK3 DIN 5401 | | Stahlkugel | Ball | Bille acier |

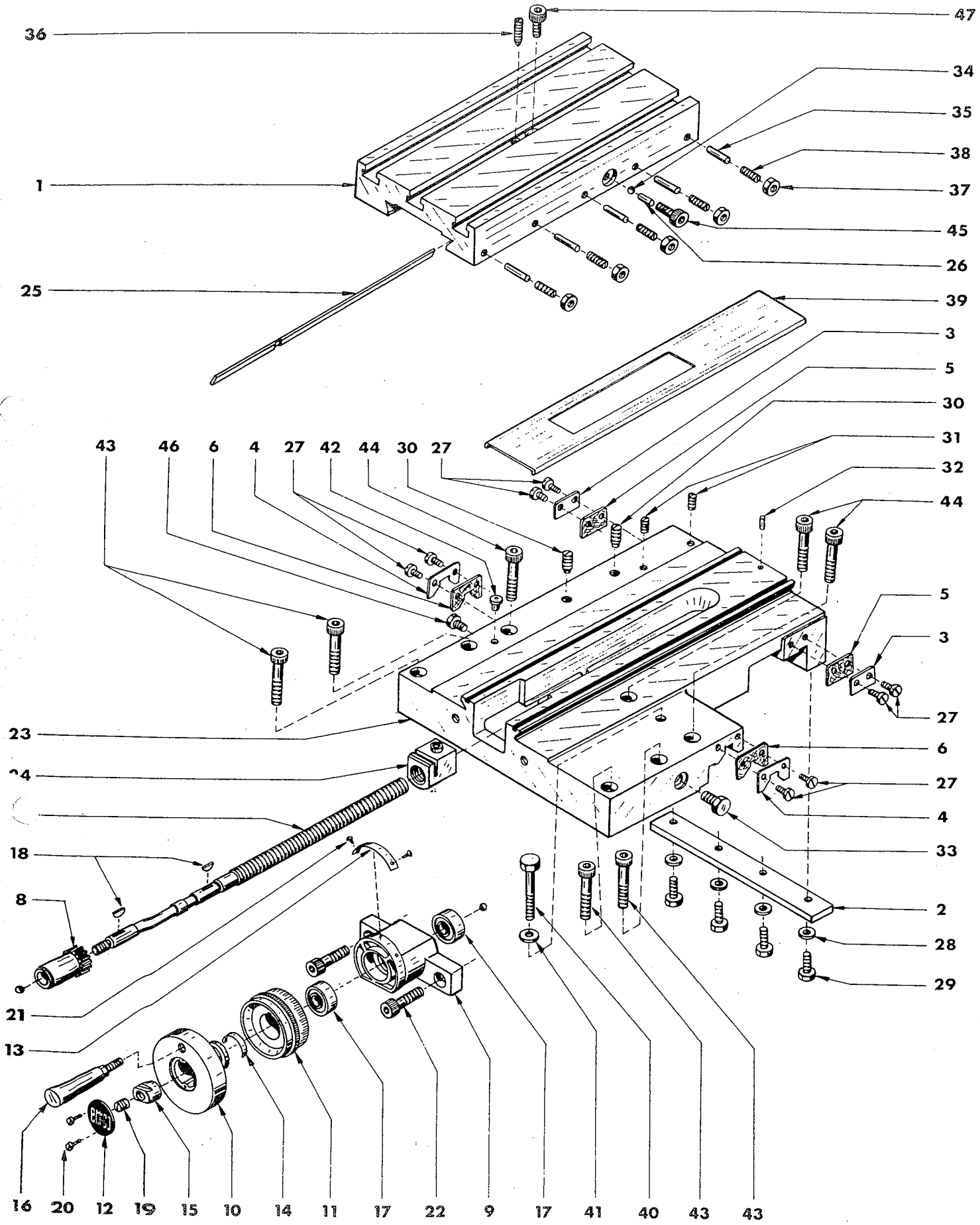
47
36
34
35
38
1
37
45
26
25
39
3
5
30
31
32
44
43
46
6
4
27
42
44
30
27
5
3
27
23
6
24
27
4
33
18
8
2
28
29
21
13
16
20
12
19
15
10
14
11
17
22
9
17
41
40
43
43

| | | | | Längs-und Quersupport | Saddle and Cross Slide | Trainard et Chariot transversal |
|---|---|---|---|---|---|---|
| Pos | Ref. No. | DIN | | BENENNUNG | DESCRIPTION | DÉSIGNATION |
| 1 | C4A 000 110 | | | Quersupport | Cross-slide-table | Support transversal |
| 2 | C3A 000 050 | | | Bettleiste | Keep plate | Lardon longitudinal |
| 3 | C3A 000 060 | | | Abstreifer | Wiper Plate | Plaquette de racleur postérieur |
| 4 | C3A 000 070 | | | Abstreifer | Wiper Plate | Plaquette de racleur antérieur |
| 5 | C3A 000 150 | | | Abstreiffilz | Felt Wiper | Racleur en feutre postérieur |
| 6 | C3A 000 160 | | | Abstreiffilz | Felt Wiper | Racleur en feutre antérieur |
| | C4A 020 000 | | | G. Querspindel | Cross slide screw | Broche transversale nue |
| 7 | C4A 020 010 | | | Querspindel M | Cross slide screw M | Broche transversale nue M |
| | C4B 020 010 | | | Querspindel Ww | Cross slide screw Ww | Broche transversale nue Ww |
| 8 | C4A 020 020 | | | Querspindelrad | Cross slide wheel | Broche transversale volant |
| 9 | C4A 020 030 | | | Querspindelträger | Lead screw mount | Palier de la broche |
| 10 | C4A 020 040 | | | Handrad | Hand wheel | Volant |
| 11 | C4A 020 050 | | | Skalenring M | Micrometer dial M | Vernier M |
| | C4B 020 050 | | | Skalenring Ww | Micrometer dial Ww | Vernier Ww |
| 12 | C4A 020 060 | | | Firmenschild | Name plate | Pastille "EMCO" |
| 13 | B2A 000 060 | | | Skalenschild M | Plate M | Plaquette repère du Vernier M |
| | B2B 040 030 | | | Skalenschild Ww | Plate Ww | Plaquette repère du Vernier Ww |
| 14 | B2A 000 080 | | | Bogenfeder | Spring | Lame ressort d'entrinement |
| 15 | B2A 000 100 | | | Mutter | Nut | Ecrou 2 pans |
| 16 | C3A 042 000 | | | G. Kegelgriff | Handle | Manette |
| 17 | ZLG 60 0000 | | | Rillenkugellager | Ball bearing | Roulements à billes |
| 18 | ZFD 88 0337 | 3x3,7 DIN 6888 | | Scheibenfeder | Key | Clavette demi-lune |
| 19 | ZST 51 0806 | M8x6 DIN 551 | | Gewindestift | Set screw | Contre-vis |
| 20 | ZSR 14 0266 | BM2,6x6 DIN 7513 | | Gewindeschneidschraube | Self tapping screw | Vis anto tarandante |
| 21 | ZNA 76 0144 | 1,4x4 DIN 1476 | | Kerbnagel | Rivet | Rivet tête ronde |
| 22 | ZSR 12 0816 | M8x16 DIN 912 | | Innensechskantschraube | Socket head screw | Vis 6 pans creux |
| 23 | C4A 000 100 | | | Schlitten | Carriage | Trainard |
| 24 | C4A 000 120 | | | Quermutter M | Cross-slide nut M | Noix du transversal M |
| | C4B 000 120 | | | Quermutter Ww | Cross-slide nut Ww | Noix du transversal Ww |
| 25 | C4A 000 140 | | | Querleiste | Gib (Cross-slide) | Lardon transversal |
| 26 | ZST 08 0510 | 5H8x10 DIN 7 | | Zylinderstift | Pin | Cheville |
| 27 | ZSR 84 0408 | M4x8 DIN 84 | | Zylinderschraube | Round head screw | Vis tête cylindrique |
| 28 | ZSB 25 0640 | B6,4 DIN 125 | | Scheibe | Washer | Rondelle plate |
| | ZSR 33 0616 | M6x16 DIN 933 | | Sechskantschraube | Hexagonal screw | Vis 6 pans |
| 30 | ZST 51 0812 | M8x12 DIN 551 | | Gewindestift | Set screw | Vis bouchon |
| 31 | ZST 53 0608 | M6x5 DIN 553 | | Gewindestift | Set screw | Vis pointeau |
| 32 | ZST 71 0408 | 4x8 DIN 1471 | | Kerbstift | Grooved pin | Goupille Camelée |
| 33 | ZSR 33 0508 | M5x8 DIN 933 | | Sechskantschraube | Hexagonal screw | Vis 6 pans |
| 34 | ZKG 00 2316 | 3/16GK3 DIN 5401 | | Stahlkugel | Ball | Bille acier |
| 35 | C3A 000 200 | | | Druckstift | Pressure pin | Cheville pression |
| 36 | B2A 000 140 | | | Nachstellschraube | Adjusting screw | Vis de reglage |
| 37 | ZMU 34 0500 | M5 DIN 934 | | Sechskantmutter | Hexagonal screw | Contre-écrou 6 pans |
| 38 | ZST 51 0515 | M5x15 DIN 551 | | Gewindestift | Set screw | Vis pointeau de réglage |
| 40 | ZSR 31 0845 | M8x45 DIN 931 | | Sechskantschraube | Hexagonal screw | Vis 6 pans |
| 41 | ZSB 25 0840 | B8,4 DIN 125 | | Scheibe | Washer | Rondelle plate |
| 42 | ZNP 01 2000 | | | Schmiernippel | Grease nipple | Graisseur |
| 43 | ZSR 12 0840 | M8x40 DIN 912 | | Innensechskantschraube | Socket head screw | Vis 6 pans creux |
| 44 | ZSR 12 0835 | M8x35 DIN 912 | | Innensechskantschraube | Socket head screw | Vis 6 pans creux |
| 45 | ZSR 12 0610 | M6x10 DIN 912 | | Innensechskantschraube | Socket head screw | Vis 6 pans creux |
| 46 | ZSR 33 0508 | M5x8 DIN 933 | | Sechskantschraube | Hexagonal screw | Vis 6 pans |
| 47 | ZSR 12 0610 | M6x10 DIN 912 | | Innensechskantschraube | Socket head screw | Vis 6 pans creux |

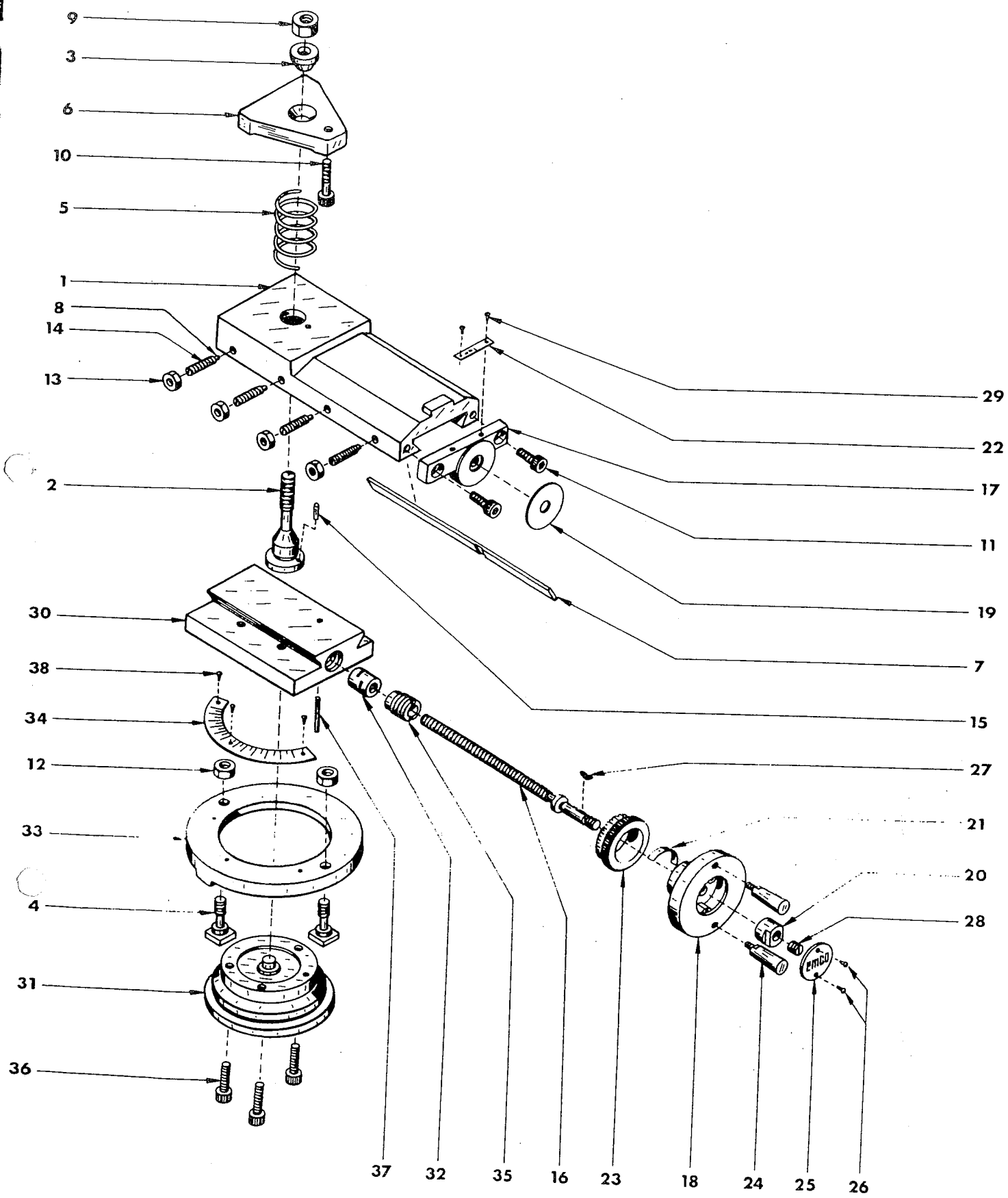
9
3
6
10
5
1
8
14
13
2
30
38
34
12
33
4
31
36
29
22
17
11
19
7
15
27
21
20
28
EMCO
37
32
35
16
23
18
24
25
26

| | | | | | | |
|---|---|---|---|---|---|---|
| | C4A 050 000<br>C4B 050 000 | | | G. Obersupport M<br>G. Obersupport Ww | Compound slide M<br>Compound slide Ww | Chariot superieur M<br>Chariot superieur Ww |
| Pos | Ref.No. | DIN | | BENENNUNG | DESCRIPTION | DÉSIGNATION |
| 1 | C3A 050 010 | | | Obersupport | Top slide | Support supérieur |
| 2 | C3A 050 020 | | | Zentrierbolzen | Centre bolt | Boulon-axe du porte-outil |
| 3 | C3A 050 030 | | | Ballenscheibe | Washer | Rondelle sphérique |
| 4 | C3A 050 040 | | | Nutschraube | T-Bolt | Boulon - T |
| | C4A 051 000 | | | G. Oberspindel M | Lead screw assembly M | Broche complète du chariot supérieur M |
| | C4B 051 000 | | | G. Oberspindel Ww | Lead screw assembly Ww | Broche complète du chariot supérieur Ww |
| 5 | C3A 050 050 | | | Druckfeder | Spring | Ressort de compression |
| 6 | C3A 050 060 | | | Spannklaue | Tool clamp | Bride de serrage de l'outil |
| 7 | C3A 050 070 | | | Oberleiste | Gib | Lardon de réglage |
| 8 | C3A 050 080 | | | Druckstift | Pad | Cheville de pression |
| 9 | C3A 040 060 | | | Sechskantmutter | Hexagonal nut | Ecrou 6 pans |
| 10 | ZSR 12 0625 | M6x25 DIN 912 | | Innensechskantschraube | Socket head screw | Vis 6 pans creux |
| 11 | ZSR 12 0612 | M6x12 DIN 912 | | Innensechskantschraube | Socket head screw | Vis 6 pans creux |
| 12 | ZMU 34 0800 | M8 DIN 934 | | Sechskantmutter | Hexagonal nut | Ecrou 6 pans |
| 13 | ZMU 34 0500 | M5 DIN 934 | | Sechskantmutter | Hexagonal nut | Contre-écrous 6 pans |
| 14 | ZST 51 0512 | M5x12 DIN 551 | | Gewindestift | Set screw | Vis pointeau de réglage |
| 15 | ZST 72 0312 | 3x12 DIN 1472 | | Paßkerbstift | Pin | Cheville de blocage |
| 16 | C3A 051 010 | | | Oberspindel M | Lead screw M | Broche M |
| | C3B 051 010 | | | Oberspindel Ww | Lead screw Ww | Broche Ww |
| 17 | C3A 051 020 | | | Oberspindelträger | Lead screw mount | Palier de broche |
| 18 | C4A 051 030 | | | Handrad | Hand wheel | Volant |
| 19 | C3A 051 040 | | | Anlaufscheibe 0,2 | Spacer 0,2 | Rondelle disque 0,2 |
| 20 | B2A 000 100 | | | Mutter | Nut | Ecrou 2 pans |
| 21 | B2A 000 080 | | | Bogenfeder | Spring | Lame-ressort d'entrainement |
| 22 | B2A 000 060 | | | Skalenschild M | Plate M | Plaquette-rèpere du vernier M |
| | B2B 040 030 | | | Skalenschild Ww | Plate Ww | Plaquette-rèpere du vernier Ww |
| 23 | B2A 020 030 | | | Skalenring M | Micrometer dial M | Vernier M |
| | B2B 020 030 | | | Skalenring Ww | Micrometer dial Ww | Vernier Ww |
| 24 | B2A 051 040 | | | Kegelgriff | Handle | Manette |
| 25 | C4A 020 060 | | | Firmenschild | Name plate | Ecusson "EMCO" |
| 26 | ZSR 14 0266 | BM2,6x6 DIN 7513 | | Gew. Schneidschraube | Self tapping screw | Vis anto tarandante |
| | ZFD 88 0337 | 3x3,7 DIN 6888 | | Scheibenfeder | Key | Clavette demi-lune |
| 28 | ZST 51 0806 | M8x6 DIN 551 | | Gewindestift | Set screw | Contre-vis |
| 29 | ZNA 76 0144 | 1,4x4 DIN 1476 | | Kerbnagel | Rivet | Rivet tête ronde |
| | C3A 052 000 | | | G. Oberplatte M | Bottom slide M | Base du chariot M |
| | C3B 052 000 | | | G. Oberplatte Ww | Bottom slide Ww | Base du chariot Ww |
| 30 | C3A 052 010 | | | Oberplatte | Bottom slide | Base du chariot |
| 31 | C3A 052 020 | | | Oberscheibe | Base plate | Base du support orientable |
| 32 | C3A 052 030 | | | Obermutter M | Lead screw nut M | Noix du chariot supérieur M |
| | C3B 052 030 | | | Obermutter Ww | Lead screw Ww | Noix du chariot supérieur Ww |
| 33 | C3A 052 041 | | | Spannring | Swivel base | Support orientable |
| 34 | C3A 052 050 | | | Skalenschild | Graduated plate | Arc repère gradué |
| 35 | C3A 052 060 | | | Gewindebüchse | Locking nut | Bague filetée de réglage |
| 36 | ZSR 12 0620 | M6x20 DIN 912 | | Innensechskantschraube | Socket head screw | Vis 6 pans creux |
| 37 | ZHL 81 0428 | 4x28 DIN 1481 | | Spannhülse | Spring pin | Cheville de blocage |
| 38 | ZNA 76 0144 | 1,4x4 DIN 1476 | | Kerbnagel | Rivet | Rivet tête ronde |

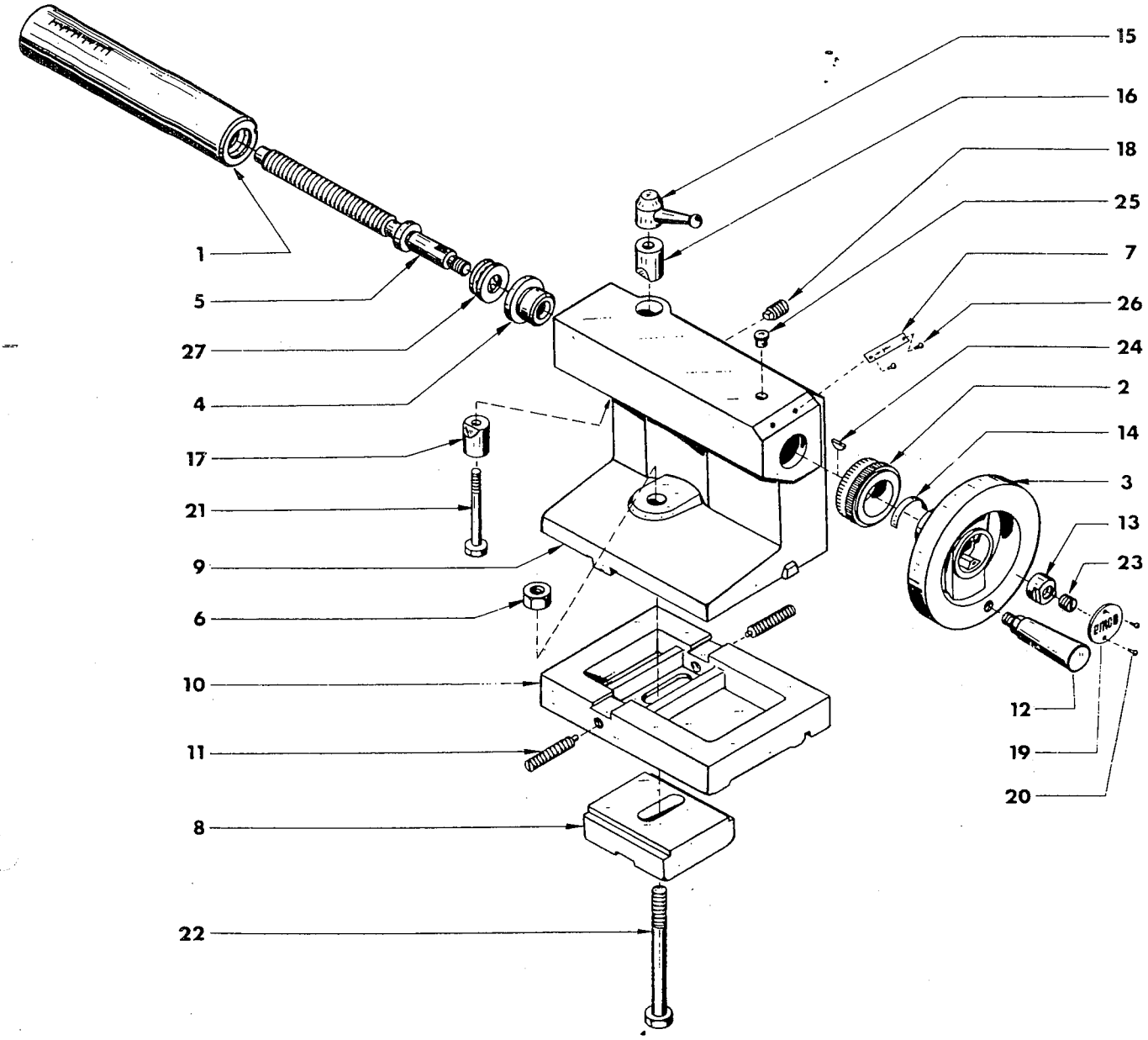
15
16
18
25
7
26
24
2
14
3
13
23
12
19
20
1
5
27
4
17
21
9
6
10
11
8
22

| | | | | | | |
|---|---|---|---|---|---|---|
| | C4A 040 000<br>C4B 040 000 | | | G. Reitstock M<br>G. Reitstock Ww | Tailstock M<br>Tailstock Ww | Poupee mobile M<br>Poupee mobile Ww |
| Pos | Ref.No. | DIN | | BENENNUNG | DESCRIPTION | DÉSIGNATION |
| 1 | C3A 040 010 | | | Reitstockpinole M | Tailstock barret M | Canon de la poupée M |
| | C3B 040 010 | | | Reitstockpinole Ww | Tailstock barret Ww | Canon de la poupée Ww |
| 2 | C3A 040 020 | | | Skalenring M | Micrometer dial M | Vernier M |
| | C3B 040 020 | | | Skalenring Ww | Micrometer dial Ww | Vernier Ww |
| 3 | C4A 010 200 | | | Handrad | Handwheel | Volant |
| 4 | C3A 040 040 | | | Bundlager | Bearing bush | Flasque |
| 5 | C3A 040 050 | | | Triebschraube M | Lead screw M | Broche M |
| | C3B 040 050 | | | Triebschraube Ww | Lead screw Ww | Broche Ww |
| 6 | C3A 040 060 | | | Sechskantmutter | Nut | Ecrou 6 pans |
| 7 | C3A 040 070 | | | Skalenschild M | Scale M | Plaquette repère du Vernier M |
| | B2B 040 030 | | | Skalenschild Ww | Scale Ww | Plaquette repère du Vernier Ww |
| 8 | C3A 040 080 | | | Klemmplatte | Clamping plate | Contre-plaque de blocage |
| | C3A 041 000 | | | G. Reitstockplatte | Tailstock base | Semelle de la poupée |
| 9 | C3A 041 010 | | | Reitstock | Tailstock housing | Corps de la poupée |
| 10 | C3A 041 020 | | | Reitstockplatte | Tailstock base | Semelle de la poupée |
| | ZST 17 0635 | M6x35 DIN 417 | | Gewindestift | Positioning screw | Vis pointeau de réglage |
| 12 | C3A 042 000 | | | G. Kegelgriff | Handle | Manette |
| 13 | B2A 000 100 | | | Mutter | Nut | Ecrou 2 pans |
| 14 | B2A 000 080 | | | Bogenfeder | Spring | Lame-ressort d'entrainement |
| 15 | B2A 040 050 | | | Knebelgriff | Lever | Manette de blocage |
| 16 | B2A 040 060 | | | Klemmbacke | Clamp piece (top) | 1/2 noix supérieure de blocage |
| 17 | B2A 040 070 | | | Klemmstück | Clamp piece (bottom) | 1/2 noix inférieure de blocage |
| 18 | B2A 040 080 | | | Führungsschraube | Guide screw | Vis de guidage |
| 19 | C4A 020 060 | | | Firmenschild | Name plate | Ecusson "EMCO" |
| 20 | ZSR 14 0266 | BM2,6x6 DIN 7513 | | Gew. Schneidschraube | Self tapping screw | Vis anto tarandante |
| 21 | ZSR 31 0655 | M6x55 DIN 931 | | Sechskantschraube | Hexagonal screw | Boulon 6 pans |
| 22 | ZSR 31 1090 | M10x90 DIN 931 | | Sechskantschraube | Hexagonal screw | Boulon 6 pans |
| 23 | ZST 51 0806 | M8x6 DIN 551 | | Gewindestift | Adjusting screw | Contre-vis |
| 24 | ZFD 88 0337 | 3x3,7 DIN 6888 | | Scheibenfeder | Key | Clavette demi-lune |
| 25 | ZNP 01 2000 | | | Schmiernippel | Grease nipple | Graisseur |
| 26 | ZNA 76 0144 | 1,4x4 DIN 1476 | | Kerbnagel | Rivet | Rivet tête ronde |
| 27 | ZLG 51 1000 | 51 100 | | Axial Rillenkugellager | Thrust ball bearing | Butée à billes |

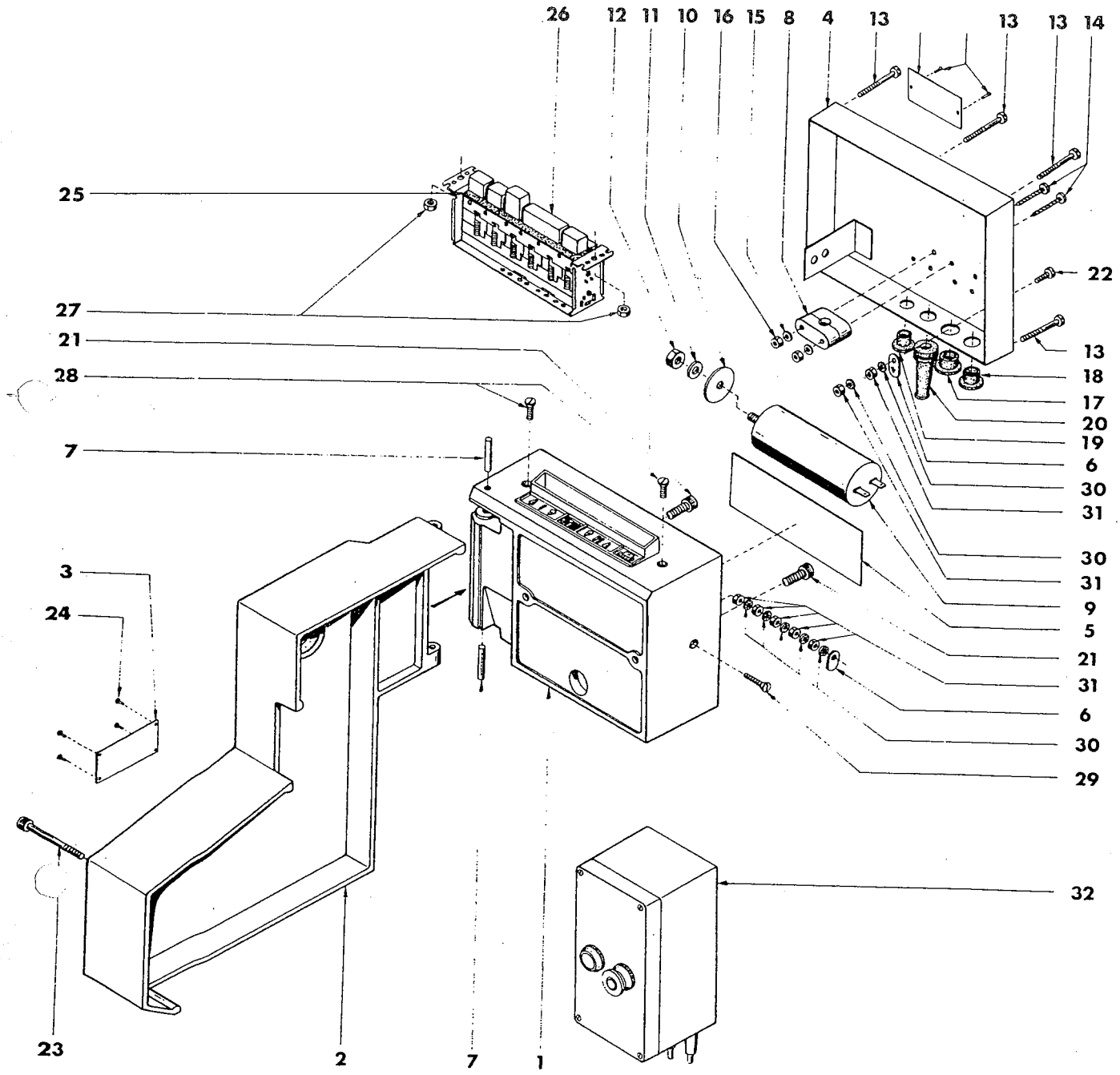
26
12
11
10
16
15
8
4
13
13
13
14
25
22
27
21
13
28
18
17
20
19
7
6
30
31
30
31
3
9
24
5
21
31
6
30
29
32
23
2
7
1

| | | | | E – Gehäuse | E – housing | Boite electrique |
|---|---|---|---|---|---|---|
| Pos | Ref.No. | DIN | | BENENNUNG | DESCRIPTION | DÉSIGNATION |
| 1 | B2A 000 391 | | | E – Gehäuse | E – housing | Boîte electrique |
| 2 | C4A 000 250 | | | Vorschubdeckel M | Dome M | Carter pivotant M |
| | C4B 000 250 | | | Vorschubdeckel Ww | Dome Ww | Carter pivotant Ww |
| 3 | B2A 000 621 | | | Schild | Plaid | Plaquette |
| 4 | B2A 101 001 | | | G. Deckel | Roofing | Couvercle |
| 5 | B2A 000 380 | | | Isolierplatte | Insulating plate | Plaque isolante |
| 6 | H1E 100 010 | | | Erdungsschild | Earthing plaid | Plaquette mise à la terre |
| 7 | ZST 06 0632 | 6M6x32 DIN 7 | | Zylinderstift | Pin | Axa carta |
| 8 | ZEL 99 0101 | | | Zugentlastungsschelle | Clip | Collier |
| 9 | ZKO 15 4210 | | | Kondensator 10µF 400V | Condenser 10µF 400V | Condensateur 10µF 400V |
| | ZKO 15 4212 | | | Kondensator 12µF 400V | Condenser 12µF 400V | Condensateur 12µF 400V |
| | ZKO 15 2540 | | | Kondensator 40µF 330V | Condenser 40µF 330V | Condensateur 40µF 330V |
| | ZKO 15 2550 | | | Kondensator 50µF 330V | Condenser 50µF 330V | Condensateur 50µF 330V |
| 10 | B2A 100 030 | | | Scheibe 40 | Washer 40 | Rondelle 40 |
| 11 | ZRG 28 0080 | B8 DIN 127 | | Federring | Clip | Bague de sécurité |
| | ZMU 34 0800 | M8 DIN 934 | | Mutter | Nut | Ecrou |
| | ZSR 84 0440 | M4x40 DIN 84 | | Zylinderschraube | Flat head screw | Vis cylindriques |
| 14 | ZSR 84 0430 | M4x30 DIN 84 | | Zylinderschraube | Flat head screw | Vis cylindriques |
| 15 | ZRG 28 0040 | B4 DIN 127 | | Federring | Clip | Bague de sécurité |
| 16 | ZMU 34 0400 | M4 DIN 934 | | Sechskantmutter | Nut | Ecrou |
| 17 | ZDK 60 0018 | F18 | | Verschlußstopfen | Stopper | Bouchon |
| 18 | ZDK 60 0012 | F12 | | Verschlußstopfen | Stopper | Bouchon |
| 19 | ZDK 60 0010 | F10 | | Verschlußstopfen | Stopper | Bouchon |
| 20 | ZEL 70 0080 | T – 8 | | Knickschutztülle | Protective coating | Passe-fil en caoutchouc |
| 21 | ZSR 12 0816 | M8x16 DIN 912 | | Zylinderschraube | Flat head screw | Vis cylindriques |
| 22 | ZSR 83 0410 | M4x10 DIN 84 | | Zylinderschraube | Flat head screw | Vis cylindriques |
| 23 | ZSR 12 0660 | M6x60 DIN 912 | | Innensechskantschraube | Allen head screw | Vis six pans creux |
| 24 | ZNA 76 0144 | 1,4x4 DIN 1476 | | Kerbnagel | Rivet | Rivet de fixation |
| 25 | B2A 100 020 | | | Schaumstoffdichtung | Plastik dirt seal | Garniture etange caoutchouc |
| | ZEL 17 1000 | | | Drucktastenschalter 1ph | Push button switch 1ph | Interrupteur monophase |
| 26 | ZEL 17 1001 | | | Drucktastenschalter 1ph CSA | Push button switch 1ph CSA | Interrupteur monophase CSA |
| | ZEL 17 3000 | | | Drucktastenschalter 3ph | Push button switch 3ph | Interrupteur 3-phase |
| | ZMU 34 0400 | M4 DIN 934 | | Mutter | Nut | Ecrou |
| 2 | ZSR 92 0412 | M4x12 DIN 964 | | Linsensenkschraube | Flat head screw | Vis tête fraisée |
| 29 | ZSR 92 0430 | M4x30 DIN 964 | | Linsensenkschraube | Flat head screw | Vis tête fraisée |
| 30 | ZSB 97 0430 | A4,3 DIN 6797 | | Zahnscheibe | Clip | Bague de sécurité |
| 31 | ZMU 34 0401 | M4 DIN 934 | | Sechskantmutter | Nut | Ecrou |
| 32 | B2V 109 000 | nur VDE | | Stromausfallschütz 220V | Contactor 220V | Contacteur 220V |
| | B2V 119 000 | | | Stromausfallschütz 380V | Contactor 380V | Contacteur 380V |

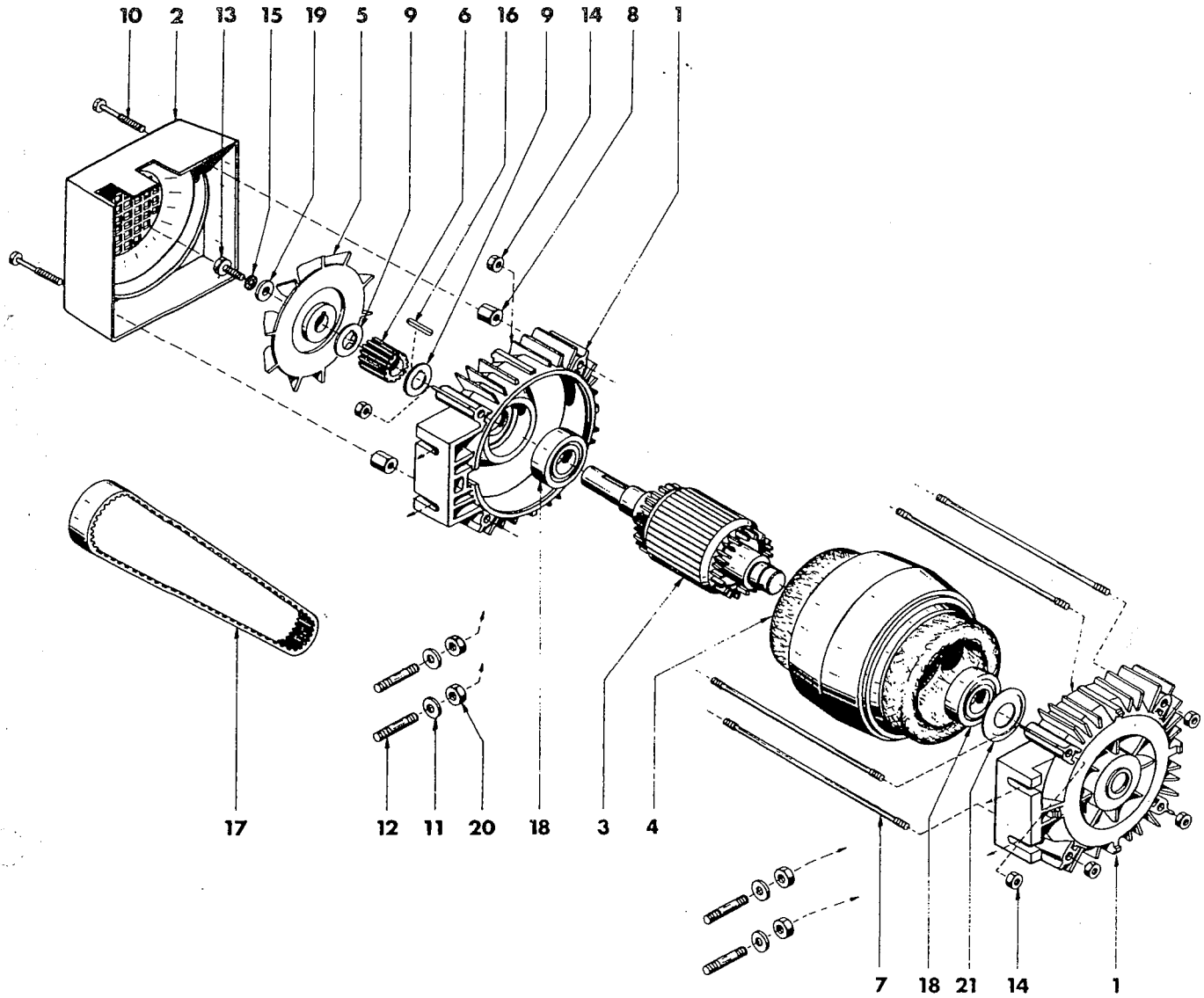
10
2
13
15
19
5
9
6
16
9
14
8
1
17
12
11
20
18
3
4
7
18
21
14
1

| Pos | Ref. No. | DIN | | Motor ELIN<br>BENENNUNG | Motor ELIN<br>DESCRIPTION | Moteur ELIN<br>DÉSIGNATION |
|---|---|---|---|---|---|---|
| 1 | B2A 100 062 | | | Lagerschild | Bearing bracket | Flasque à ailettes |
| 2 | B2A 000 440 | | | Lüfterhaube | End shield | Carter de ventilateur |
| 3 | ZMR 75 1000 | | | Rotor*) | Rotor*) | Rotor*) |
| 4 | | | | Stator*) | Stator*) | Stator*) |
| 5 | B2A 100 110 | | | Lüfterflügel | Fan | Ventilateur |
| 6 | B2A 100 100 | | | Riemenscheibe 18 | Motor pulley 18 | Poulie grantée de mot. 18 |
| | B2B 100 100 | | | Riemenscheibe 16 | Motor pulley 16 | Poulie grantée de mot. 16 |
| 7 | B2A 100 070 | | | Gehäuseschraube | Casing screw | Tirants d'assemblage |
| 8 | B2A 100 080 | | | Gehäusemutter | Casing nut | Ecrou de boîtier |
| 9 | B2A 100 090 | | | Scheibe | Washer | Rondelle |
| 10 | ZSR 84 0530 | M5x30 DIN 84 | | Zylinderschraube | Flat head screw | Vis cylindrique |
| 11 | ZSB 21 0640 | A6,4 DIN 9021 | | Scheibe | Washer | Rondelle |
| 12 | ZSR 39 0820 | M8x20 DIN 939 | | Stiftschraube | Stud | Goujon |
| 13 | ZSR 38 0620 | M6x20 DIN 938 | | Sechskantschraube | Hexagonal screw | Vis hexagonal |
| 14 | ZMU 34 0500 | M5 DIN 934 | | Mutter | Nut | Ecrou hexagonal |
| — | ZSB 98 0640 | A6,4 DIN 6798 | | Fächerscheibe | Spring washer | Ressort hélicoidal |
| 16 | ZFD 85 4432 | A4x4x32 DIN 6885 | | Paßfeder | Spring | Clavette |
| 17 | ZRM 51 4200 | 200XL 100 | | Zahnriemen | Timing belt | Courroie crantée |
| 18 | ZLG 60 0402 | 6004 - 2Z | | Kugellager | Ball bearing | Roulements à billes |
| 19 | B2A 100 120 | | | Beilagscheibe | Washer | Rondelle |
| 20 | ZMU 34 0800 | M8 DIN 934 | | Mutter | Nut | Ecrou hexagonal |
| 21 | B2A 100 090 | | | Scheibe | Washer | Rondelle |

*) Bei Bestellung bitte Spannung und Frequenz angeben.
In your order please indicate voltage and frequency.
A la commande specifier le voltage et la frequence du moteur.

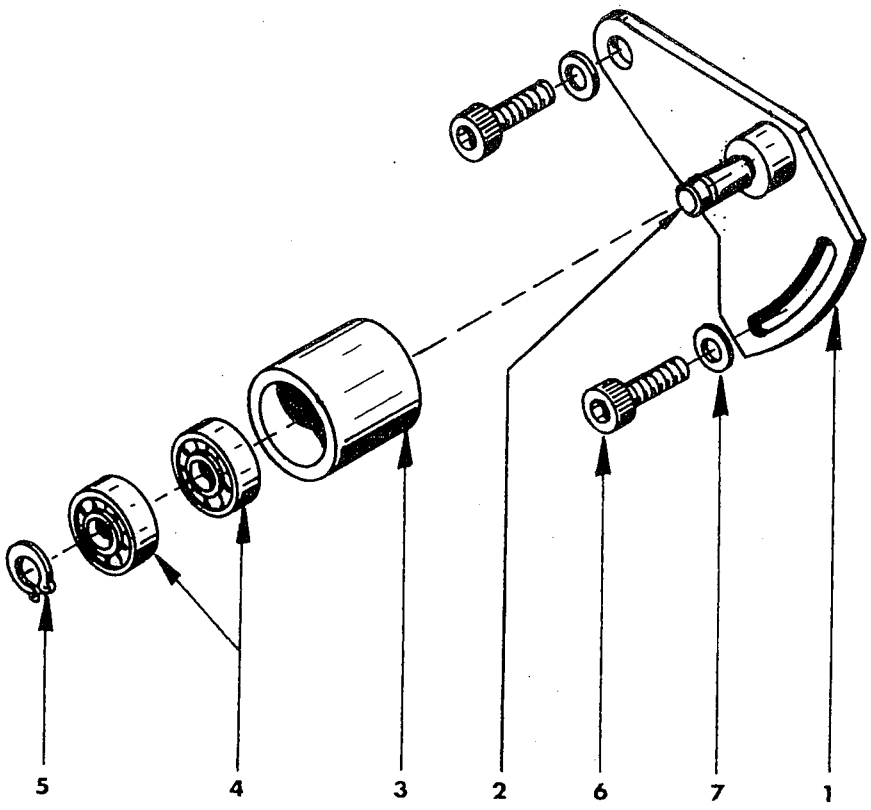


| | | | | | |
|---|---|---|---|---|---|
| B2A 180 000 | | | G. Riemenspanner | Tensioning roller | Rouleau tendeur (assemble) |
| Pos | Ref. No. | DIN | BENENNUNG | DESCRIPTION | DÉSIGNATION |
| 1 | B2A 180 011 | | Spannblech | Plate | Bras du tendeur |
| 2 | B2A 180 020 | | Lagerbolzen | Journal | Support de palier |
| 3 | B2A 180 030 | | Rolle | Roller | Rouleau |
| 4 | ZLG 06 0801 | 608 - Z | Rillenkugellager | Ball bearing | Roulement à billes |
| 5 | ZRG 71 0808 | 8x0,8 DIN 471 | Sicherungsring | Circlip | Circlips |
| 6 | ZSR 12 0616 | M6x16 DIN 912 | Innensechskantschraube | Allen head screw | Vis 6 pans creux |
| 7 | ZSB 25 0640 | B6,4 DIN 125 | Scheibe | Washer | Rondelle |

## E – EINSCH SLIDE – IN ELECTRICAL UNIT TIROIR ELECTRIQUE

| Pos | | | 1 | 2 | 3 | 4 | 5 | | 6 | | 7 | | 8 | |
|---|---|---|---|---|---|---|---|---|---|---|---|---|---|---|
| | Netzanschluß<br>Mains supply<br>Connexion au réseau | Gr. E-Einschub<br>Section "Slide in electrical unit"<br>Groupe "tiroir electrique" | Kondensator<br>Capacitor<br>Condensateur | Schutz<br>Contactor<br>Contacteur | Relais (Hauptmotor)<br>Relay (Main drive motor)<br>Relais (moteur de commande) | Relais (Vertikalmotor)<br>Relay (Motor for vertical attachment)<br>Relais (moteur) pour dispositif vertical | Hauptmotorschalter (Kompl.)<br>Switch for main drive motor (complete)<br>Interrupteur pour moteur de commande (complet) | | Notausschalter (kompl.)<br>Mushroom type emergency stop (complete)<br>Bouton arrêt d' urgence (complet) | | Vertikalmotorschalter (Kompl.)<br>Switch for vertical attachment (complete)<br>Interrupteur pour dispositif vertical (complet) | | Hauptschalter (Kompl.)<br>Main switch (complete)<br>Interrupteur principal (complet) | |
| | | | | | | | TÜV | Standard | TÜV | Standard | TÜV | Standard | TÜV | Standard |
| Wechselstrom<br>Alternating current<br>Courant alternatif | 100/50 | C5D 102 000 | ZKO 14 3550 | ZME 01 1106 | ZME 02 1110 | ZME 03 1115 | ZME 04 1001 | ZME 04 1000 | ZME 07 2001 | ZME 07 2000 | ZME 05 2001 | ZME 05 2000 | ZME 06 2001 | ZME 06 2000 |
| | 100/60 | C5E 102 000 | ZKO 14 3540 | | | | | | | | | | | |
| | 110/50 | C5F 102 000 | ZKO 14 3550 | ZME 01 1116 | | | | | | | | | | |
| | 115/60 | C5B 102 000 | ZKO 14 3540 | | ZME 02 1115 | | | | | | | | | |
| | 115/60 CSA | C5C 102 000 | ZKO 14 3540 CSA | | | | | | | | | | | |
| | 220/60 | C5G 102 000 | ZKO 15 4010 | ZME 01 1226 | ZME 02 1250 | ZME 03 1250 | | | | | | | | |
| | 220/50 | C5A 102 000 | ZKO 15 4012 | ZME 01 1230 | | | | | | | | | | |
| | 230/50 | C5H 102 000 | | | | | | | | | | | | |
| | 240/50 | C5L 102 000 | | ZME 01 1250 | | | | | | | | | | |
| | 250/50 | C5M 102 000 | | | | | | | | | | | | |
| Drehstrom<br>Three-phase current<br>Courant triphasé | 220/50 | C5B 112 000 | | ZME 01 3220 | ZME 02 3220 | ZME 03 3220 | ZME 04 3001 | ZME 04 3000 | | | | | | |
| | 220/60 | C5F 112 000 | | ZME 01 3226 | | | | | | | | | | |
| | 350/50 | C5C 112 000 | | ZME 01 3350 | ZME 02 3350 | ZME 03 3350 | | | | | | | | |
| | 380/50 | C5A 112 000 | | ZME 01 3446 | ZME 02 3500 | ZME 03 3500 | | | | | | | | |
| | 440/60 | C5G 112 000 | | | | | | | | | | | | |
| | 440/50 | C5D 112 000 | | ZME 01 3440 | | | | | | | | | | |
| | 500/50 | C5E 112 000 | | ZME 01 3500 | | | | | | | | | | |

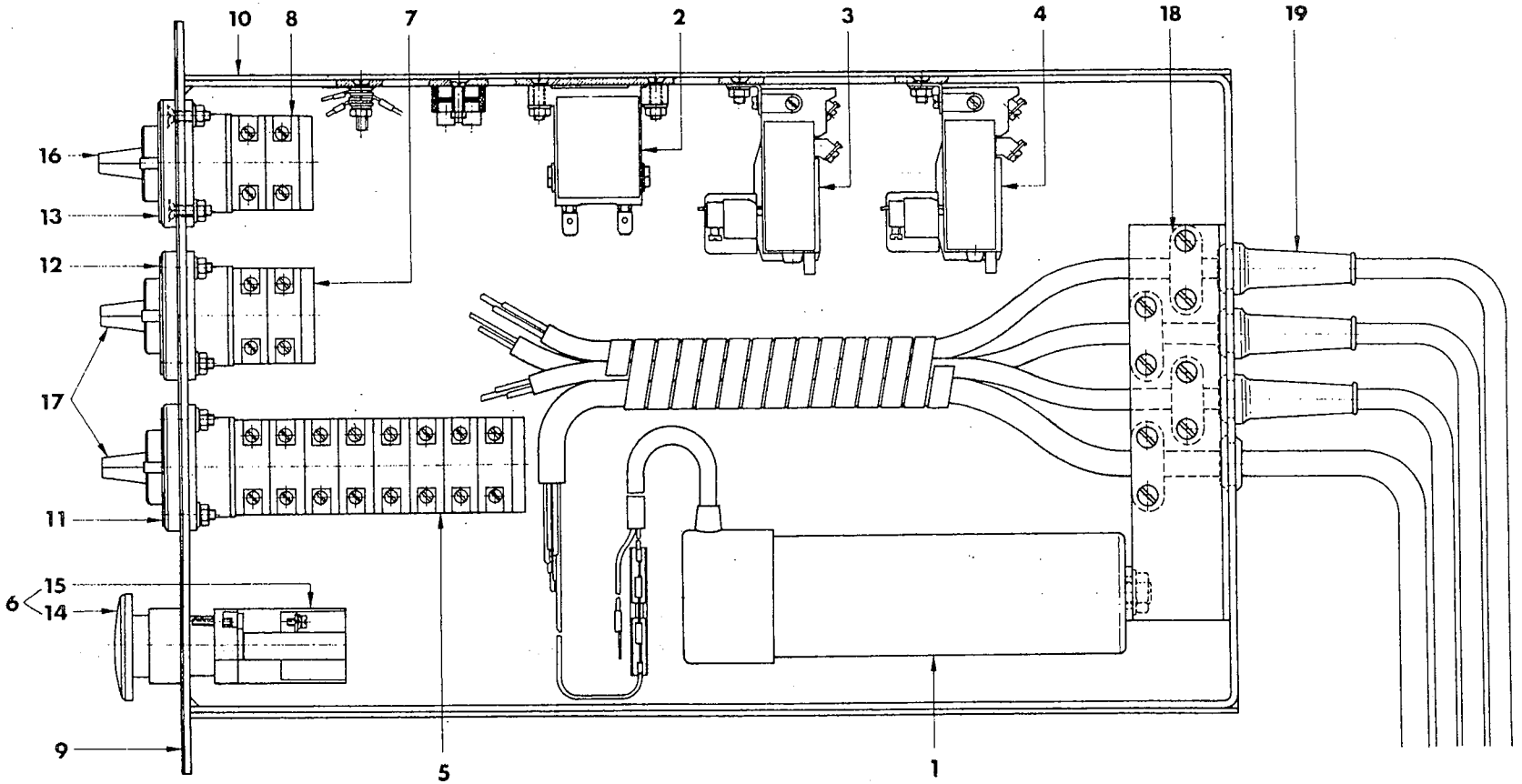

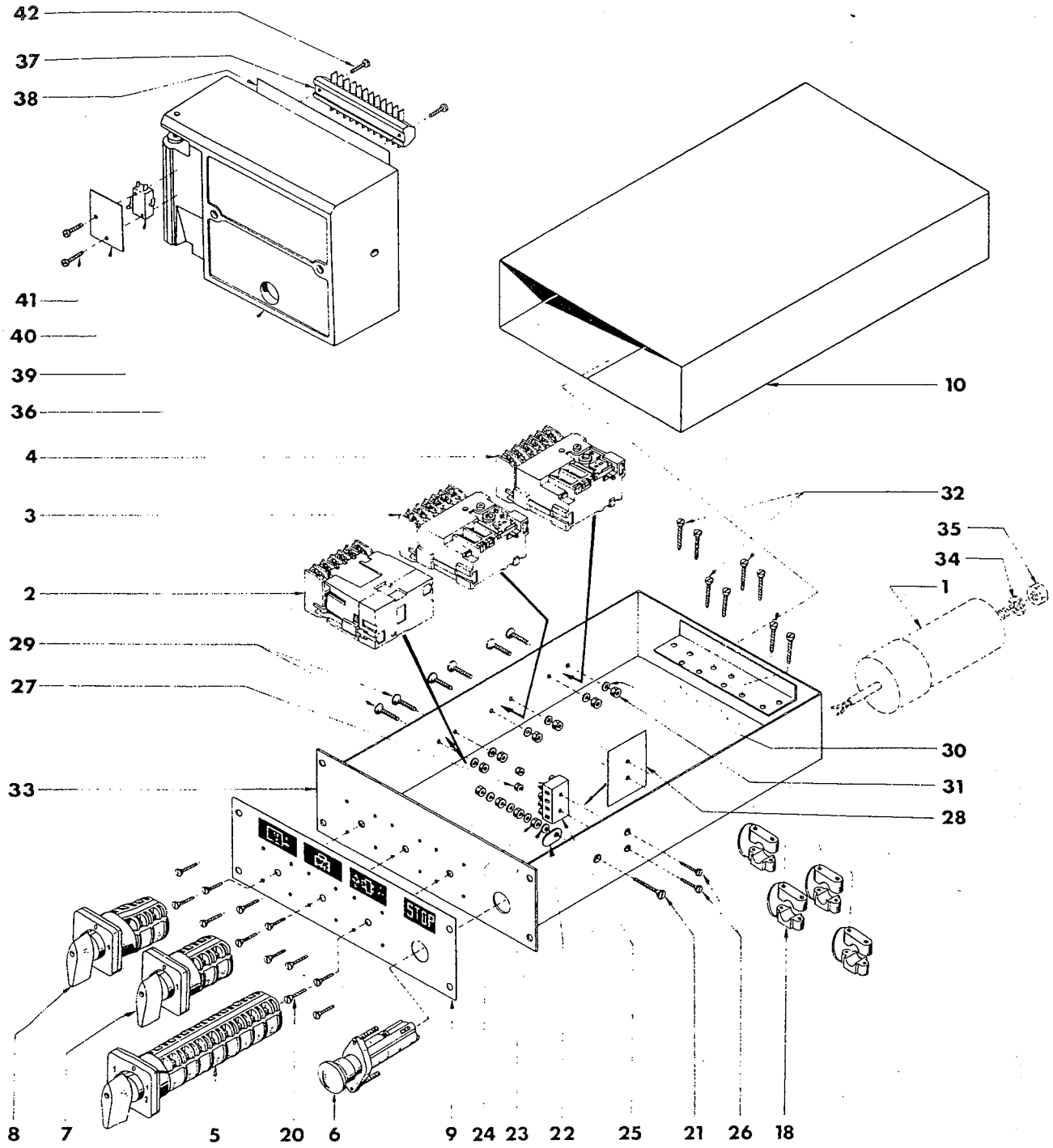
42
37
38
41
40
39
36
4
3
2
29
27
33
10
32
35
34
1
30
31
28
STOP
8
7
5
20
6
9
24
23
22
25
21
26
18

| Pos | Ref. No. | DIN | | BENENNUNG | DESCRIPTION | DÉSIGNATION |
|---|---|---|---|---|---|---|
| 9 | ZME 00 1000 | | | Frontplatte | Front panel | Panneau de commande |
| 10 | ZME 00 1001 | | | Hülle | Casing | Enveloppe |
| 11 | ZME 04 2000 | | | Frontschild | Escutcheon plate | Cadran plexi |
| 12 | ZME 05 2002 | | | Frontschild | Escutcheon plate | Cadran plexi |
| 13 | ZME 06 2002 | | | Frontschild(Stand.) | Escutcheon plate(Stand.) | Cadran plexi(Stand.) |
| | ZME 06 2003 | | | Frontschild(TÜV) | Escutcheon plate(TÜV) | Cadran plexi(TÜV) |
| 14 | ZME 07 2003 | | | Pilztaste (Stand.) | Emergency-cutout(Stand.) | Bouton arrêt d'urgence(Stand.) |
| | ZME 07 2004 | | | Pilztaste(TÜV) | Emergency-cutout(TÜV) | Boulon arrêt d'urgence(TÜV) |
| 15 | ZME 07 2002 | | | Betätigungselement | Switch | Interrupteur |
| 16 | ZME 06 2004 | | | Drehgriff(Stand.) | Handle (Stand.) | Manette (Stand.) |
| | ZME 04 2001 | | | Drehgriff(TÜV) | Handle(TÜV) | Manette (TÜV) |
| 17 | ZME 06 2004 | | | Drehgriff(Stand.) | Handle(Stand.) | Manette(Stand.) |
| | ZME 04 2001 | | | Drehgriff(TÜV) | Handle(TÜV) | Manette(TÜV) |
| 18 | ZEL 99 0101 | | | Zugentlastungsschelle | Traction relief clip | Collier |
| 19 | ZEL 70 0080 | | | Knickschutztülle | Protective coating | Douille |
| [illegible] | ZME 00 1002 | S1B T100-10 | | Senkblechschraube | Countersunk screw | Vis tête fraisée |
| 21 | ZSR 64 0425 | M4x25 DIN 964 | | Linsensenkschraube | Countersunk screw | Vis tête fraisée |
| 22 | H1E 100 010 | | | Erdungsschild | Earthing plaid | Plaquette mise à la terre |
| 23 | ZRG 28 0040 | B4 DIN 127 | | Federring | Clip | Bague de sécurité |
| 24 | ZMU 34 0400 | M4 DIN 934 | | Sechskantmutter | Nut | Ecrou |
| 25 | ZEL 01 0100 | Nr. 103 | | Vierfach-Bruchklemme | Cable connector | Connector unipolaire |
| 26 | ZSR 63 0316 | M3x16 DIN 963 | | Senkschraube | Countersunk screw | Vis tête fraisée |
| 27 | ZMU 34 0300 | M3 DIN 934 | | Sechskantmutter | Nut | Ecrou |
| 28 | C5A 102 030 | | | Isolierplatte | Insulating plate | Plaque isolante |
| 29 | ZSR 63 0420 | M4x20 DIN 963 | | Senkschraube | Countersunk screw | Vis tête fraisée |
| 30 | ZSB 25 0430 | A4,3 DIN 125 | | Scheibe | Washer | Rondelle |
| 31 | ZMU 34 0400 | M4 DIN 934 | | Sechskantmutter | Nut | Ecrou |
| 32 | ZSR 71 4232 | B4,2x32 DIN 7971 | | Zylinderblechschraube | Flat head screw | Vis cylindriques |
| 33 | C5A 103 000 | | | G. Rahmen | Frame | Châssis |
| 34 | ZRG 28 0080 | B8 DIN 127 | | Federring | Clip | Bague de sécurité |
| 35 | ZMU 34 0800 | M8 DIN 934 | | Mutter | Nut | Ecrou |
| 36 | C5A 000 390 | | | Klemmenkasten | Housing | Corps |
| 37 | ZEL 02 0002 | | | Flachstecker | Spade terminal | Fiche plate |
| | C5A 100 020 | | | Isolierplatte | Insulating plate | Plaque isolante |
| 39 | ZEL 23 9001 | | | Basisschalter | Micro-switch | Micro-contact |
| 40 | C5A 100 010 | | | Deckplatte | Cover plate | Panneau à recouvrement |
| 41 | ZSR 84 0320 | M3x20 DIN 84 | | Zylinderschraube | Flat head screw | Vis cylindriques |
| 42 | ZSR 84 0316 | M3x16 DIN 84 | | Zylinderschraube | Flat head screw | Vis cylindriques |

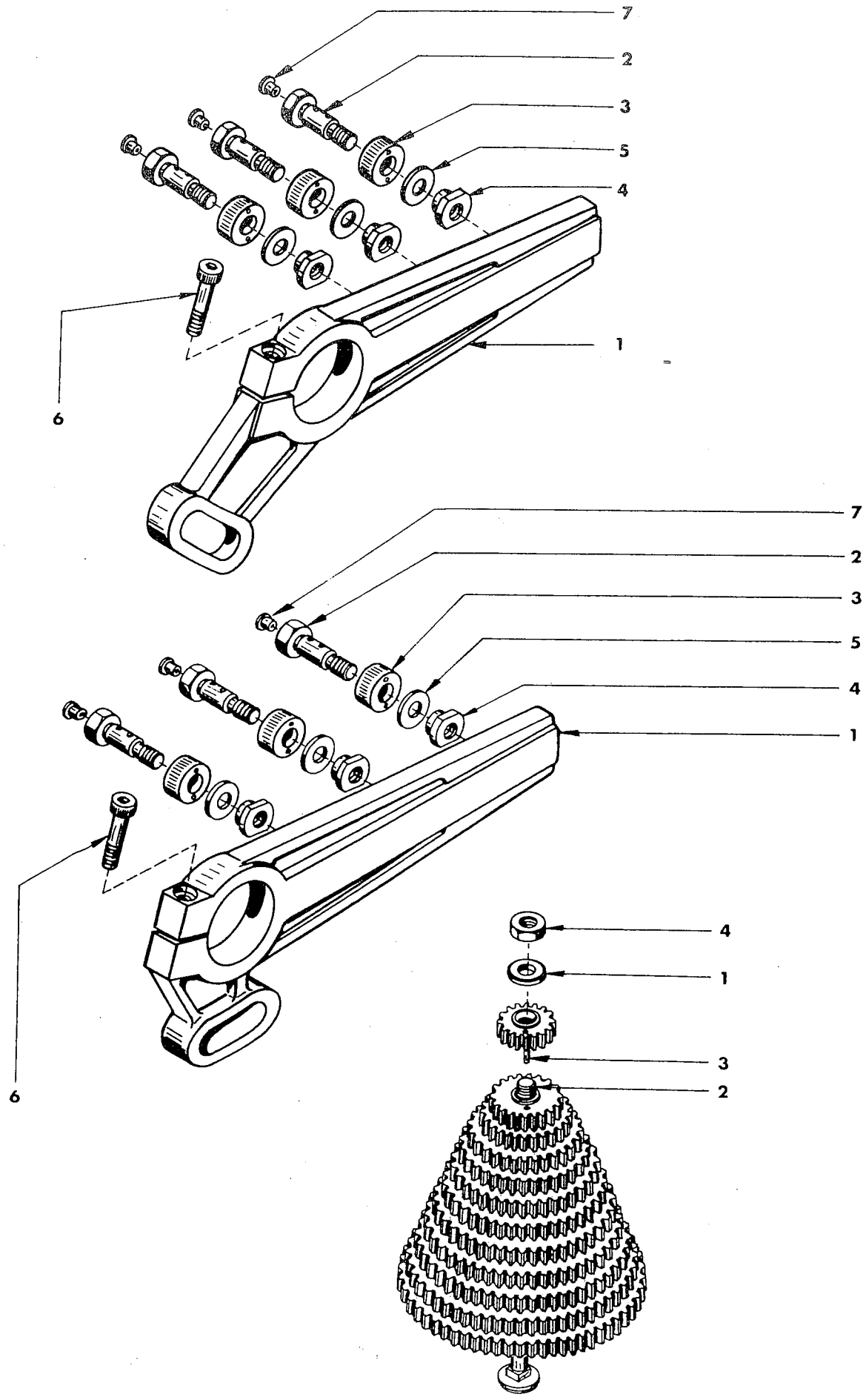
7
2
3
5
4
1
6
7
2
3
5
4
1
6
4
1
3
2

| | | | | G. Universalschere M | Quadrant M | Lyre universelle M |
|---|---|---|---|---|---|---|
| Pos | Ref.No. | DIN | | BENENNUNG | DESCRIPTION | DÉSIGNATION |
| 1 | C3Z 010 010 | | | Universalschere M | Quadrant M | Lyre universelle M |
| 2 | C3Z 010 020 | | | Scherbolzen | Bolt | Boulon-axe |
| 3 | C3B 160 020 | | | Scherhülse | Bush | Entretoise |
| 4 | C3Z 010 030 | | | Nutenstein | T-nut | Ecrou-coulissant |
| 5 | C3Z 011 010 | | | Scheibe | Washer | Rondelle plate |
| 6 | ZSR 12 0830 | M8x30 DIN 912 | | Innensechskantschraube | Socket head screw | Vis 6 pans creux |
| 7 | ZNP 01 1000 | | | Schmiernippel | Grease nipple | Graisseur |

| | | | | G. Universalschere Ww | Quadrant Ww | Lyre universelle Ww |
|---|---|---|---|---|---|---|
| Pos | Ref.No. | DIN | | BENENNUNG | DESCRIPTION | DÉSIGNATION |
| 1 | C3Z 020 010 | | | Universalschere Ww | Quadrant Ww | Lyre universelle Ww |
| 2 | C3Z 010 020 | | | Scherbolzen | Bolt | Boulon-axe |
| 3 | C3B 160 020 | | | Scherhülse | Bush | Entretoise |
| 4 | C3Z 010 030 | | | Nutenstein | T-nut | Ecrou-coulissant |
| 5 | C3Z 011 010 | | | Scheibe | Washer | Rondelle plate |
| 6 | ZSR 12 0830 | M8x30 DIN 912 | | Innensechskantschraube | Socket head screw | Vis 6 pans creux |
| 7 | ZNP 01 1000 | | | Schmiernippel | Grease nipple | Graisseur |

| | | 3 12 000 | | G. Rädersatz | Set of change gears | Jeu d'engrenages |
|---|---|---|---|---|---|---|
| Pos | Ref.No. | DIN | | BENENNUNG | DESCRIPTION | DÉSIGNATION |
| 1 | C3Z 011 010 | | | Scheibe | Washer | Rondelle |
| 2 | ZSR 04 0914 | M8x140MU DIN603 | | Flachrundschraube | Bolt | Boulon tête ronde |
| 3 | ZHL 81 0316 | 3x16 DIN 1481 | | Spannhülse | Spring pin | Goupille fendue |
| 4 | ZMU 34 0800 | M8 DIN 934 | | Sechskantmutter | Nut | Ecrou 6 pans |
| | C3Z 011 020 | | | Wechselrad 25 | Change gear 25 | Engrenage 25 |
| | C3Z 011 030 | | | Wechselrad 30 | Change gear 30 | Engrenage 30 |
| | C3Z 011 040 | | | Wechselrad 35 | Change gear 35 | Engrenage 35 |
| | C3Z 011 050 | | | Wechselrad 40 | Change gear 40 | Engrenage 40 |
| | C3Z 011 060 | | | Wechselrad 45 | Change gear 45 | Engrenage 45 |
| | C3Z 011 070 | | | Wechselrad 50 | Change gear 50 | Engrenage 50 |
| | C3Z 011 080 | | | Wechselrad 55 | Change gear 55 | Engrenage 55 |
| | C3Z 011 090 | | | Wechselrad 60 | Change gear 60 | Engrenage 60 |
| | C3Z 011 100 | | | Wechselrad 65 | Change gear 65 | Engrenage 65 |
| | C3Z 011 110 | | | Wechselrad 70 | Change gear 70 | Engrenage 70 |
| | C3Z 011 120 | | | Wechselrad 75 | Change gear 75 | Engrenage 75 |
| | C3Z 011 130 | | | Wechselrad 80 | Change gear 80 | Engrenage 80 |

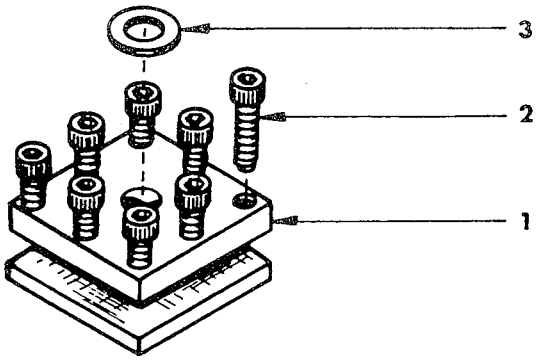
3
2
1

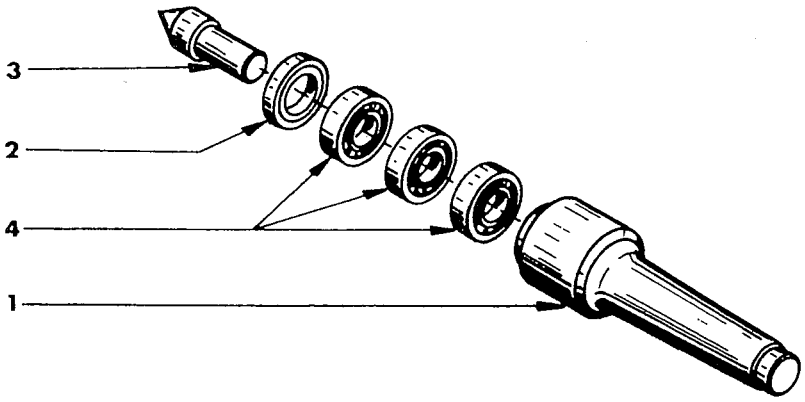
3
2
4
1

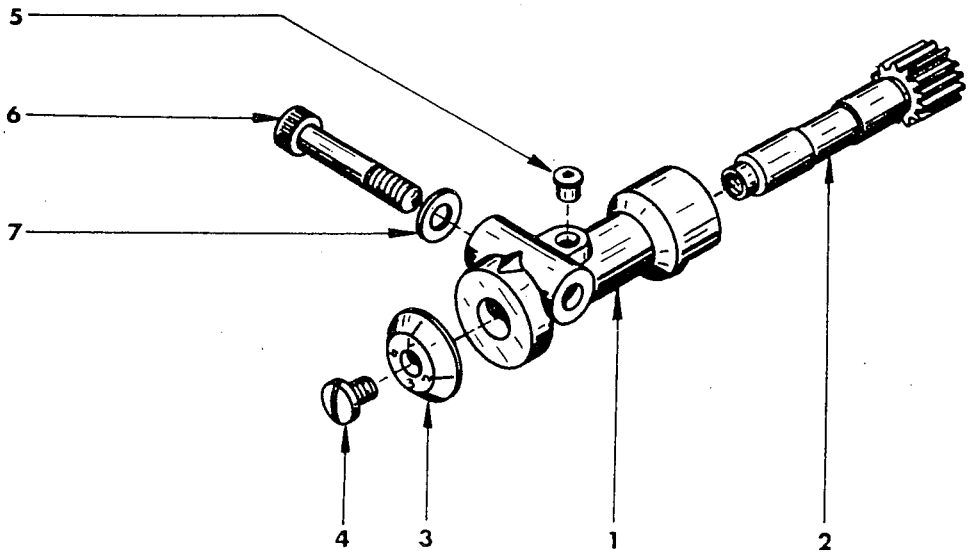
5
6
7
4
3
1
2

| | | | | G. Vierfachstahlhalter | 4-way tool post | Tourelle caree porte-outils |
|---|---|---|---|---|---|---|
| Pos | Ref.No. | DIN | | BENENNUNG | DESCRIPTION | DÉSIGNATION |
| 1 | C3Z 190 010 | | | Vierfachstahlhalter | 4-way tool post | Tourelle carée |
| 2 | ZSR 12 0620 | M6x20 DIN 912 | | Innensechskantschraube | Socket head screw | Vis 6 pans creux |
| 3 | ZSB 25 1050 | B10,5 DIN 125 | | Scheibe | Washer | Rondelle plate |

| | | | | G. Rollkörner | Revolving center | Pointe tournante |
|---|---|---|---|---|---|---|
| Pos | Ref.No. | DIN | | BENENNUNG | DESCRIPTION | DÉSIGNATION |
| 1 | B2Z 260 010 | | | Körper | Tapered shank | Corps |
| 2 | B2Z 260 020 | | | Abdeckring | Cover | Bague de fermeture |
| 3 | B2Z 260 030 | | | Körner | Centre | Pointe |
| 4 | ZLG 06 0800 | 608 EL8 | | Kugellager | Ball bearing | Roulement à bille |

| | | | | G. Gewindeuhr | Thread dial indicator | Indicateur de filetage |
|---|---|---|---|---|---|---|
| Pos | Ref.No. | DIN | | BENENNUNG | DESCRIPTION | DÉSIGNATION |
| 1 | C3Z 210 010 | | | Körper | Body | Corps |
| 2 | C3Z 210 020 | | | Spindel | Spindle | Broche |
| 3 | C3Z 210 030 | | | Ziffernscheibe | Dial | Disque gradué |
| 4 | ZSR 85 0610 | AM6x10 DIN 85 | | Linsenzylinder-Schraube | Flat head screw | Vis tête cylindrique |
| 5 | ZNP 01 2000 | | | Schmiernippel | Grease nipple | Graisseur |
| 6 | ZSR 12 0845 | M8x45 DIN 912 | | Innensechskantschraube | Socket head screw | Vis 6 pans creux |
| 7 | ZSB 25 0840 | B8,4 DIN 125 | | Scheibe | Washer | Rondelle plate |

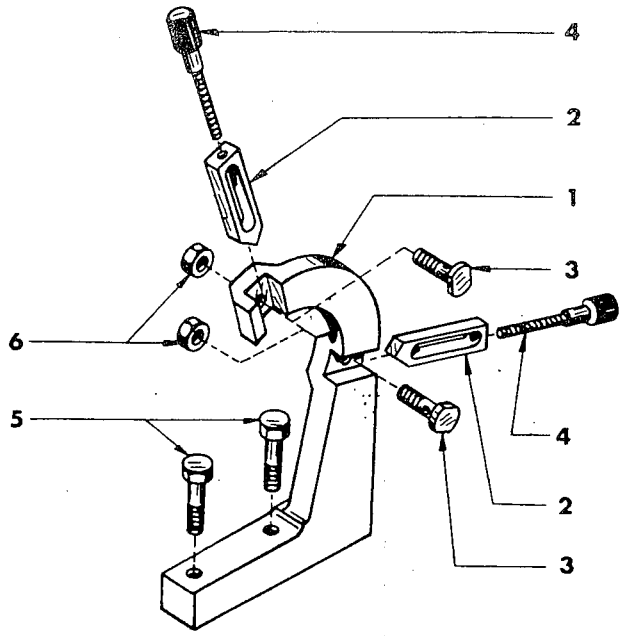
4
2
1
3
6
5
4
2
3

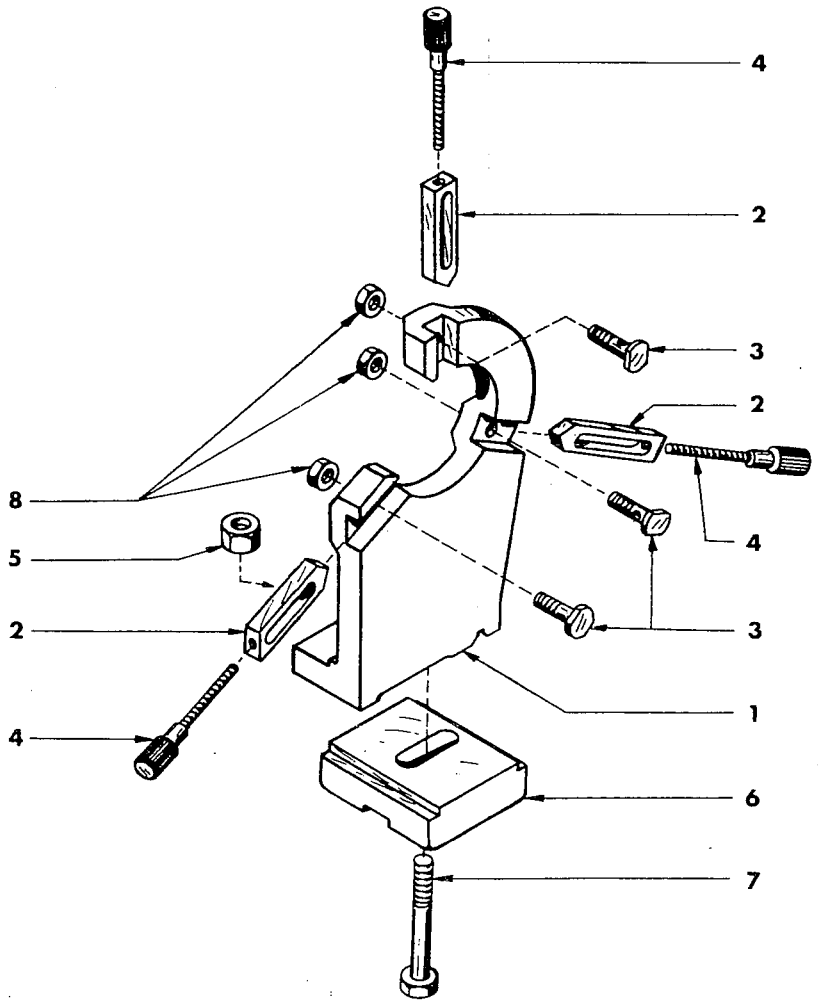
4
2
3
2
8
4
5
3
2
1
4
6
7

| | | | | G. Lauflünette | Travelling steady | Lunette à suivre |
|---|---|---|---|---|---|---|
| Pos | Ref.No. | DIN | | BENENNUNG | DESCRIPTION | DÉSIGNATION |
| 1 | C3Z 230 010 | | | Lauflünette | Housing | Corps de la lunette |
| 2 | B2Z 230 020 | | | Gleitbacke | Jaw | Touche |
| 3 | B2Z 230 030 | | | Nutschraube | Screw | Boulon-T |
| 4 | B2Z 230 040 | | | Stellschraube | Thumb screw | Vis moletée de réglage |
| 5 | ZSR 33 0830 | M8x30 DIN 933 | | Sechskantschraube | Fixing bolt | Vis 6 pans |
| 6 | ZMU 34 0800 | M8 DIN 934 | | Mutter | Nut | Ecrou 6 pans |

| | | | | G. Stehlünette | Fixed steady | Lunette fixe |
|---|---|---|---|---|---|---|
| Pos | Ref.No. | DIN | | BENENNUNG | DESCRIPTION | DÉSIGNATION |
| 1 | C3Z 240 010 | | | Stehlünette | Housing | Corps de la lunette |
| 2 | B2Z 230 020 | | | Gleitbacke | Jaw | Touche |
| 3 | B2Z 230 030 | | | Nutschraube | Screw | Boulon-T |
| 4 | B2Z 230 040 | | | Stellschraube | Thumb screw | Vis moletée de réglage |
| 5 | C3A 040 060 | | | Sechskantmutter | Nut | Ecrou 6 pans |
| | C3A 040 080 | | | Klemmplatte | Clamping plate | Contre-plaque de blocage |
| 7 | ZSR 31 1060 | M10x60 DIN 931 | | Sechskantschraube | Hexagonal screw | Boulon 6 pans |
| 8 | ZMU 34 0800 | M8 DIN 934 | | Mutter | Nut | Ecrou 6 pans |

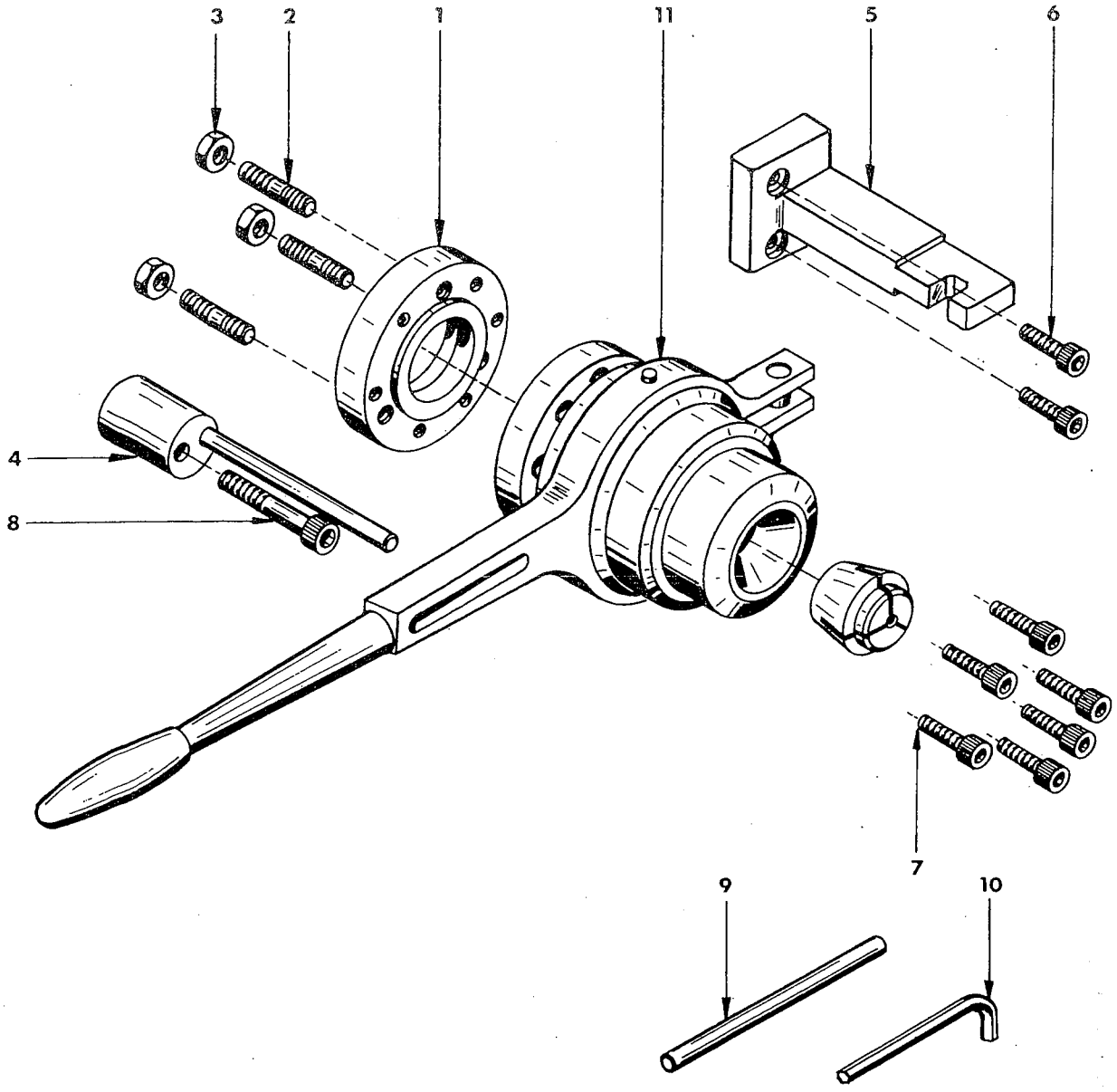


| | | | | G. Schnellspannfutter | Quick action collet chuck | Mandrin a serrage rapide |
|---|---|---|---|---|---|---|
| Pos | Ref. No. | DIN | | BENENNUNG | DESCRIPTION | DESIGNATION |
| | B4Z 071 000 | | | G. Flansch | Backplate | Plateau |
| 1 | B4Z 071 010 | | | Flansch | Backplate | Plateau |
| 2 | ZSR 39 0820 | M8x20 DIN 939 | | Stiftschraube | Stud | Goujon filetée |
| 3 | ZMU 34 0800 | M8 DIN 934 | | Sechskantmutter | Nut | Ecrou hexagonal |
| 4 | B2Z 072 000 | | | G. Auflagebolzen | Bolt | Boulon |
| 5 | B4Z 070 010 | | | Stütze | Braket | Lünette |
| 6 | ZSR 12 0620 | M6x20 DIN 912 | | Innensechskantschraube | Allen head screw | Vis six pans creux |
| 7 | ZSR 12 0616 | M6x16 DIN 912 | | Innensechskantschraube | Allen head scre | Vis six pans creux |
| 8 | ZSR 12 0845 | M8x45 DIN 912 | | Innensechskantschraube | Allen head screw | Vis six pans creux |
| 9 | ZST 11 0710 | 6M11x100 DIN 7 | | Zylinderstift | Pin | Axa carter |
| 10 | ZWZ 11 0600 | | | Sechskantstiftschlüssel | Hexagonal key | Clé à six pans |
| 11 | SSF 20Z | | | Schnellspannfutter | Quick action collet chuck | Mandrin à serrage rapide |

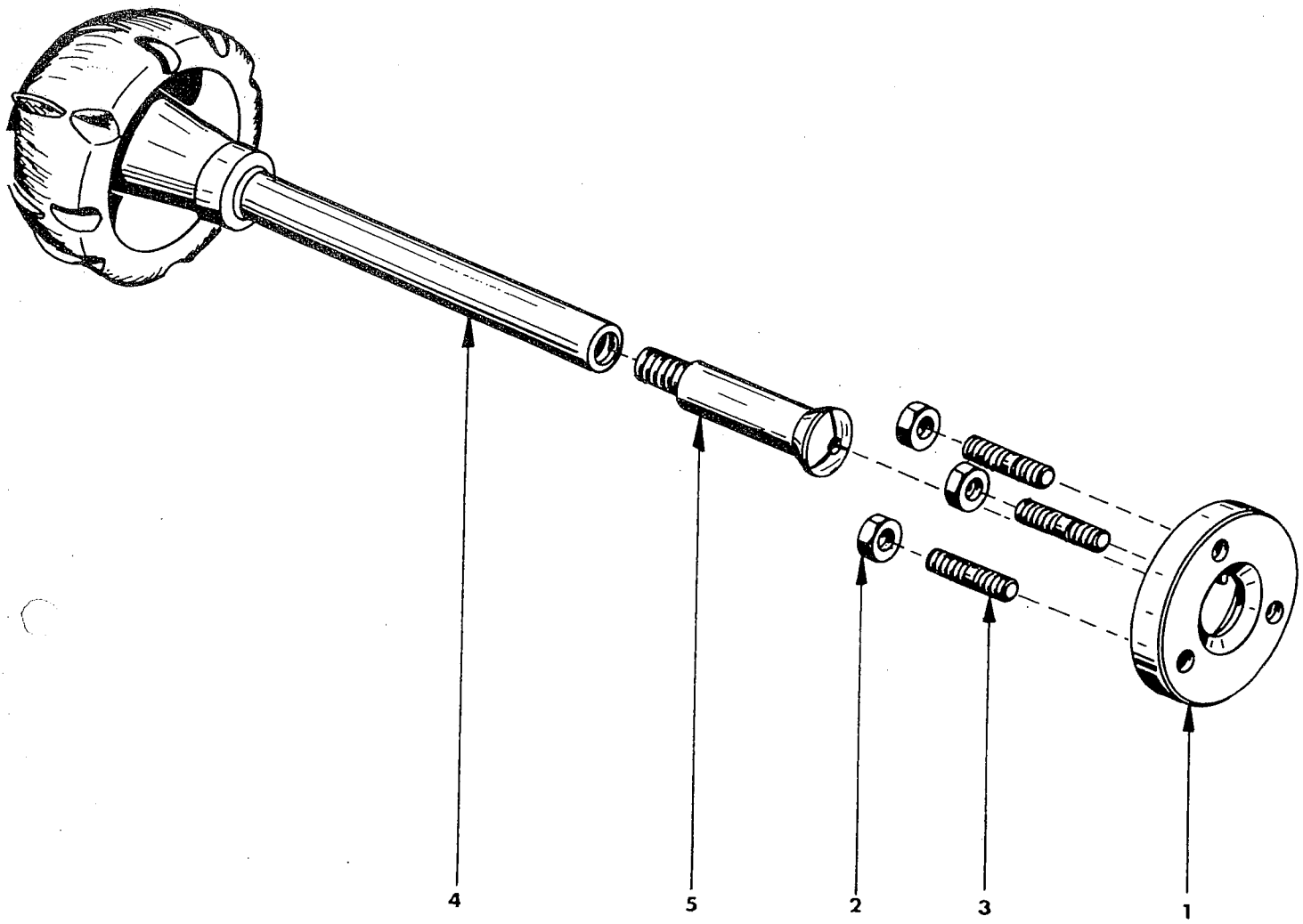


| Pos | Ref. No. | DIN | | G. Spannzangenhalter<br>BENENNUNG | Collet attachment<br>DESCRIPTION | Dispositif de serrage par pinces<br>DESIGNATION |
|---|---|---|---|---|---|---|
| | B4Z 041 000 | | | G. Zangenhalter | Flange | Tirant |
| 1 | B4Z 041 010 | | | Zangenhalter | Flange | Tirant |
| 2 | ZMU 34 0800 | | | Sechskantmutter | Nut | Ecrou hexagonal |
| 3 | ZSR 39 0820 | | | Stiftschraube | Stud | Goujon filetée |
| 4 | B2Z 041 000 | | | G. Anzugspindel | Draw bar | Tirant |
| 5 | ZSZ 00 0000 | | | Zange | Collet | Pince |

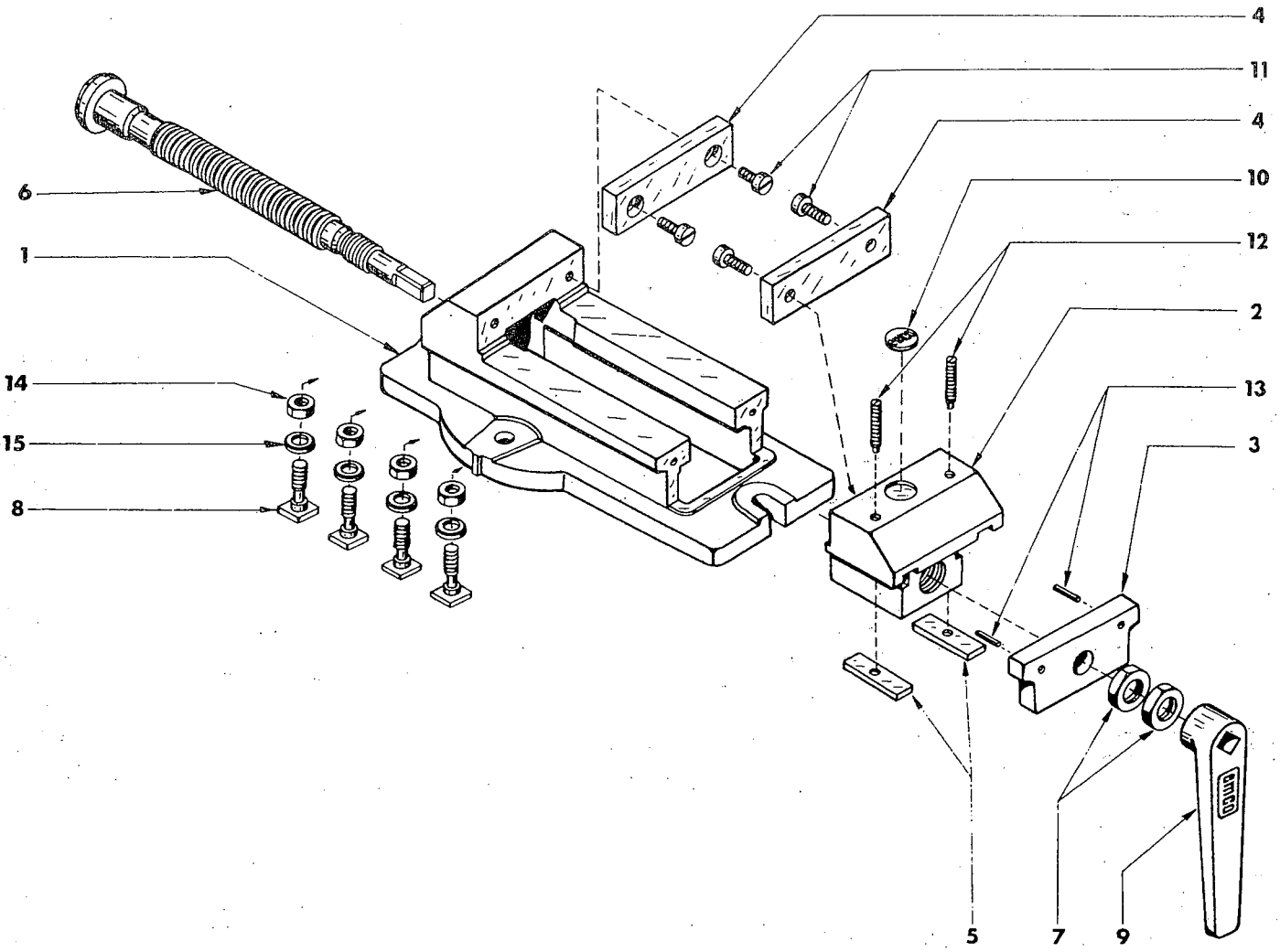
4
11
4
10
12
2
13
3
6
1
14
15
8
5
7
9

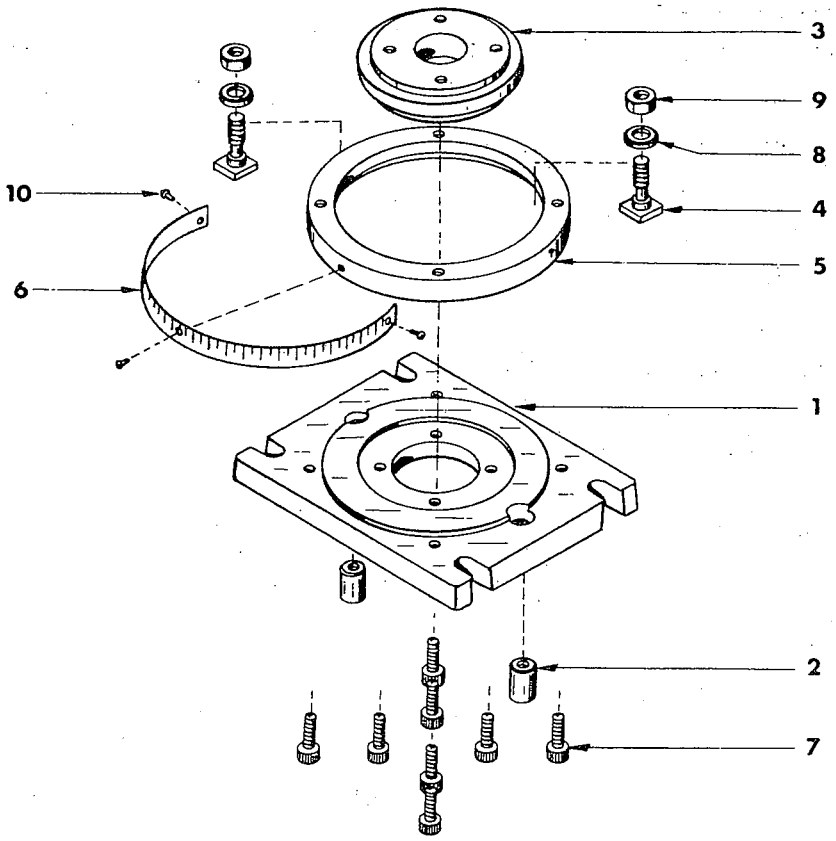
3
9
8
4
5
10
6
1
2
7

| | | | | G.Maschinenschraubstock | Machine vice | Etau-machine |
|---|---|---|---|---|---|---|
| Pos | Ref.No. | DIN | | BENENNUNG | DESCRIPTION | DÉSIGNATION |
| 1 | C3Z 310 010 | | | Körper | Housing | Corps de l'étau |
| 2 | C3Z 310 020 | | | Backe | Jaw-mount with nut | Mors mobile |
| 3 | C3Z 310 030 | | | Spindelträger | Lead screw mount | Palier de broche |
| 4 | C3Z 310 040 | | | Einsatz | Jaw | Garniture de mors |
| 5 | C3Z 310 050 | | | Plättchen | Slide plates | Lardon |
| 6 | C3Z 310 060 | | | Spindel | Lead screw | Broche |
| 7 | C3Z 310 070 | | | Mutter | Nut | Ecrou 6 pans |
| 8 | C3Z 030 040 | | | Nutschraube | T-Bolt | Boulon-T |
| 9 | B2Z 310 080 | | | Schlüssel | Wrench | Clé carrée |
| 10 | A2Z 430 040 | | | Firmenschild | Name plate | Pastille "EMCO" |
| 11 | ZSR 84 0612 | M6x12 DIN 84 | | Zylinderschraube | Round head screw | Vis tête cylindrique |
| 12 | ZST 17 0625 | M6x25 DIN 417 | | Gewindestift | Set screw | Vis pointeau |
| 13 | ZST 72 0316 | 3x16 DIN 1472 | | Paßkerbstift | Pin | Cheville de positionnement |
| 14 | ZMU 34 0800 | M8 DIN 934 | | Sechskantmutter | Nut | Ecrou 6 pans |
| | ZSB 25 0840 | B8,4 DIN 125 | | Scheibe | Washer | Rondelle plate |

| | | | | Schraubstock-Untersatz | Swivel base | Base rotative |
|---|---|---|---|---|---|---|
| Pos | Ref.No. | DIN | | BENENNUNG | DESCRIPTION | DÉSIGNATION |
| 1 | C3Z 030 010 | | | Grundplatte | Base plate | Embase |
| 2 | C3Z 030 020 | | | Nutenstift | Guide | Douille-guide |
| 3 | C3Z 030 030 | | | Zentrierscheibe | Swivel centre | Disque de centrage |
| 4 | C3Z 030 040 | | | Nutschraube | T-Bolt | Boulon-T |
| 5 | C3Z 030 050 | | | Skalenring | Base ring | Anneau |
| 6 | C3Z 030 060 | | | Skalenschild | Scale plate | Bande rèpere graduée |
| 7 | ZSR 12 0616 | M6x16 DIN 912 | | Innensechskantschraube | Socket head screw | Vis 6 pans creux |
| 8 | ZSB 25 0840 | B8,4 DIN 125 | | Scheibe | Washer | Rondelle plate |
| 9 | ZMU 34 0800 | M8 DIN 934 | | Sechskantmutter | Nut | Ecrou 6 pans |
| 10 | ZNA 76 0144 | 1,4x4 DIN 1476 | | Kerbnagel | Rivet | Rivet tête ronde |

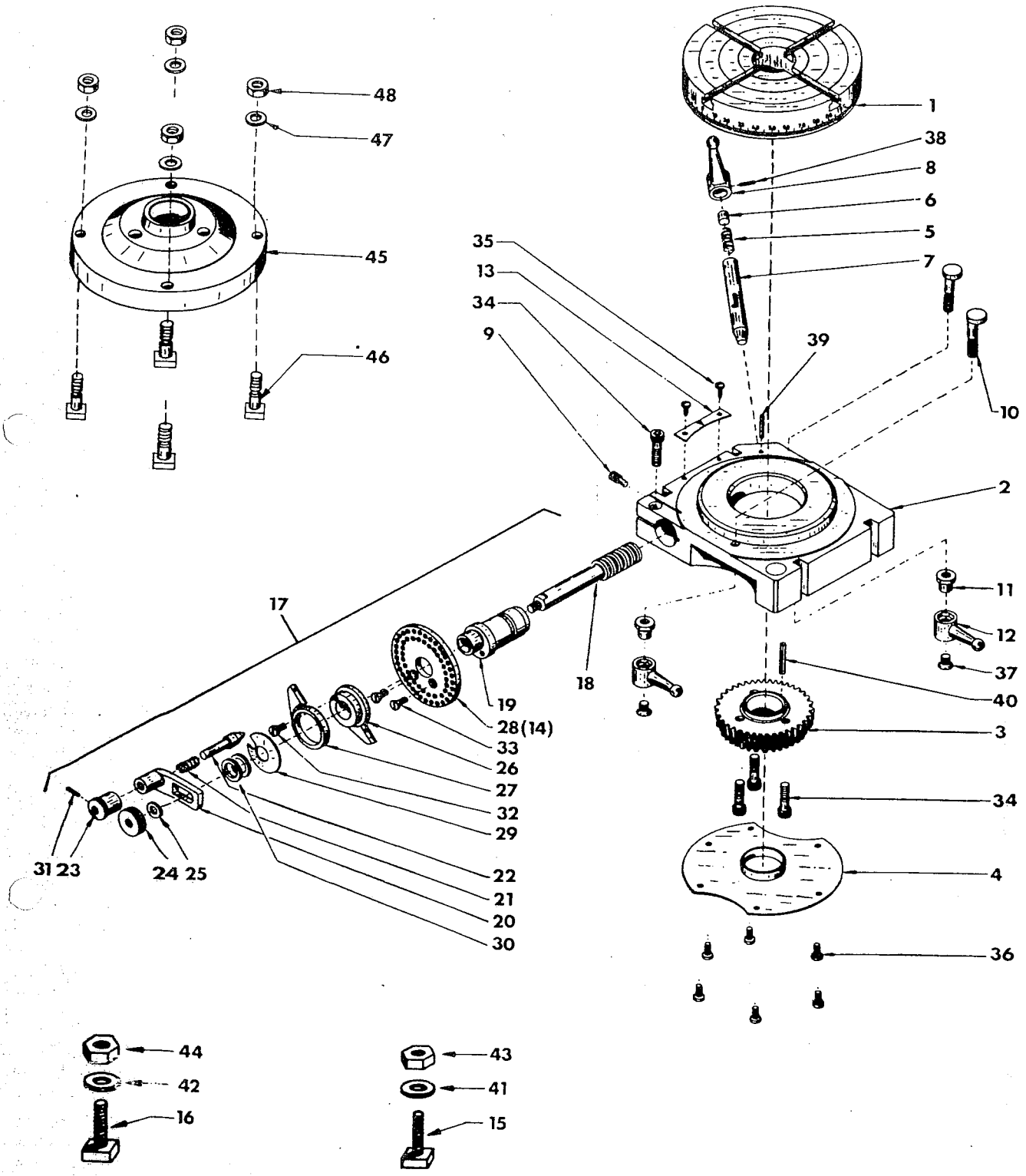
48
47
45
46
1
38
8
6
5
7
35
13
34
9
39
10
2
11
12
37
40
3
34
4
36
17
18
19
28(14)
33
26
27
32
29
22
21
20
30
31 23
24 25
44
42
16
43
41
15

| | | | | G. Teilapparat | Dividing head | Appareil diviseur |
|---|---|---|---|---|---|---|
| Pos | Ref.No. | DIN | | BENENNUNG | DESCRIPTION | DESIGNATION |
| 1 | B2Z 320 010 | | | Rundtisch | Table | Table |
| 2 | B2Z 320 020 | | | Gehäuse | Housing | Corps |
| 3 | B2Z 320 030 | | | Teilrad | Table flange | Broche diviseur |
| 4 | B2Z 320 040 | | | Deckblech | Cover mount | Couvercle |
| 5 | B2Z 320 050 | | | Druckfeder | Compression spring | Ressort à pression |
| 6 | B2Z 320 060 | | | Druckbolzen | Bolt | Boulon |
| 7 | B2Z 320 070 | | | Index | Locking pin | Index |
| 8 | B2Z 320 080 | | | Knebelgriff | Lever | Levier |
| 9 | B2Z 320 090 | | | Anschlagschraube | Bushing | Douille |
| 10 | B2Z 320 100 | | | Klemmschraube | Locking bolt | Vis de blocage |
| 11 | B2Z 320 110 | | | Mutter | Nut | Ecrou |
| 12 | B2Z 320 120 | | | Knebelgriff | Lever | Levier |
| 13 | B2Z 320 130 | | | Zeiger | Guide | Indicateur |
| | B2Z 320 140 | | | Lochscheibe 33-36-39 | Indexing plate | Disque à trous |
| 14 | B2Z 320 150 | | | Lochscheibe 38-40 | Indexing plate | Disque à trous |
| 15 | B2Z 320 160 | | | Nutenschraube | T-Nut | Glissière |
| 16 | B2Z 320 170 | | | Nutenschraube | T-Nut | Glissière |
| 17 | B2Z 321 000 | | | Gr. Schnecke | Worm shaft | Vis sans fin |
| 18 | B2Z 321 010 | | | Schnecke | Worm shaft | Vis sans fin |
| 19 | B2Z 321 020 | | | Exzenter | Assembly arbor | Excentrique |
| 20 | B2Z 321 030 | | | Kurbel | Crank | Manivelle |
| 21 | B2Z 321 040 | | | Druckfeder | Compression spring | Ressort à pression |
| 22 | B2Z 321 050 | | | Absteckbolzen | Bolt | Boulon |
| 23 | B2Z 321 060 | | | Hülse | Sleeve | Gousse |
| 24 | B2Z 321 070 | | | Rändelmutter | Knurled nut | Ecrou moletée |
| 25 | B2Z 321 080 | | | Scheibe | Plate | Poulie |
| 26 | B2Z 321 090 | | | Schere rechts | Section arm r. h. | Lyre droite |
| 27 | B2Z 321 100 | | | Schere links | Section arm l. h. | Lyre gauche |
| 28 | B2Z 321 120 | | | Lochscheibe | Indexing plate | Disque à trous |
| 29 | B2Z 321 130 | | | Tellerfeder | Spring washer | Ressort hélicoidal |
| 30 | B2Z 321 150 | | | Scheibe | Plate | Poulie |
| 31 | ZHL 81 0212 | 2x12 DIN 1481 | | Spannhülse | Pin | Tige de serrage |
| 32 | ZSR 85 0406 | AM4x6 DIN 85 | | Zylinderschraube | Flat head screw | Vis cylindriques |
| 33 | ZSR 63 0410 | M4x10 DIN 963 | | Senkschraube | Flat head screw | Vis de sûreteé |
| 34 | ZSR 12 0625 | M6x25 DIN 912 | | Innensechskantschraube | Allen head screw | Vis six pans creux |
| 35 | ZSR 84 0304 | M3x4 DIN 84 | | Zylinderschraube | Flat head screw | Vis cylindriques |
| 36 | ZSR 84 0406 | M4x6 DIN 84 | | Zylinderschraube | Flat head screw | Vis cylindriques |
| 37 | ZSR 63 0608 | M6x8 DIN 963 | | Senkschraube | Flat head screw | Vis de sûreteé |
| 38 | ZHL 81 0214 | 2x14 DIN 1481 | | Spannhülse | Pin | Tige de serrage |
| 39 | ZHL 81 0322 | 3x22 DIN 1481 | | Spannhülse | Pin | Tige de serrage |
| 40 | ZHL 81 0530 | 5x30 DIN 1481 | | Spannhülse | Pin | Tige de serrage |
| 41 | ZSB 25 0640 | B6,4 DIN 125 | | Scheibe | Washer | Rondelle |
| 42 | ZSB 25 0840 | B8,4 DIN 125 | | Scheibe | Plate | Poulie |
| 43 | ZMU 34 0600 | M6 DIN 934 | | Mutter | Nut | Ecrou |
| 44 | ZMU 34 0800 | M8 DIN 934 | | Mutter | Nut | Ecrou |
| | B4Z 170 000 | | | G. Zwischenflansch | Backplate | Plateau |
| 45 | B4Z 170 010 | | | Zwischenflansch | Backplate | Plateau |
| 46 | B4Z 170 020 | | | Nutenschraube | T-Nut | Glissière |
| 47 | ZSB 25 0640 | B6,4 DIN 125 | | Scheibe | Washer | Rondelle |
| 48 | ZMU 34 0600 | M6 DIN 934 | | Sechskantmutter | Nut | Ecrou hexagonal |

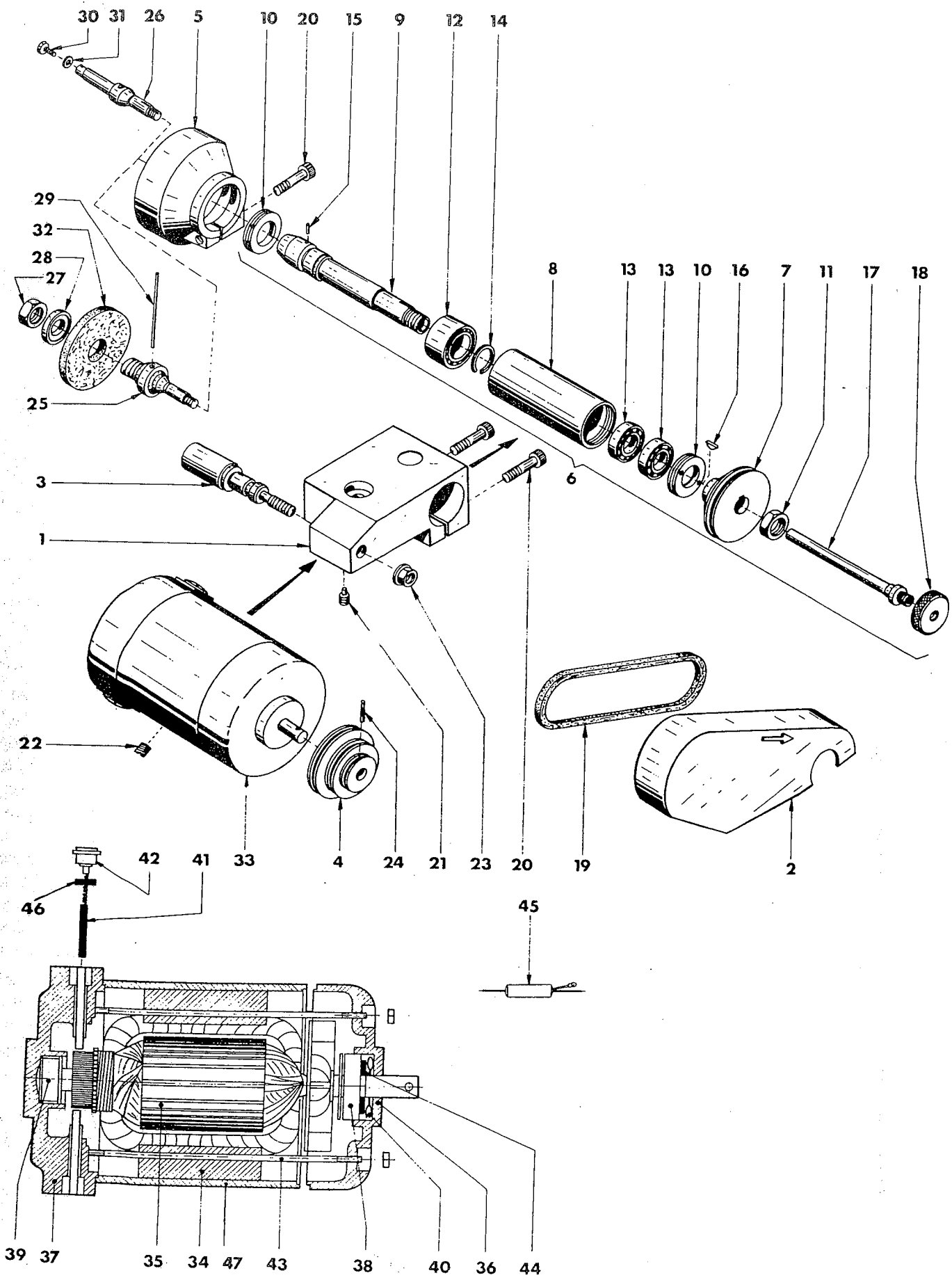
30
31
26
5
10
20
15
9
12
14
29
32
28
27
25
8
13
13
10
16
7
11
17
18
3
1
6
22
33
4
24
21
23
20
19
2
42
41
46
45
39
37
35
34
47
43
38
40
36
44

| Pos | Ref. No. | DIN | | Supportschleifapparat<br>BENENNUNG | Tool post grinder<br>DESCRIPTION | Dispositif d'affutage sur support<br>DÉSIGNATION |
|---|---|---|---|---|---|---|
| 1 | SOB 000 010 | | | Körper | Housing | Corps |
| 2 | SOA 000 020 | | | Riemenschutz | Cover | Carter protecteur |
| 3 | SOA 000 030 | | | Motorbolzen | Bolt | Tasseau |
| 4 | SOA 000 040 | | | Riemenscheibe | Pulley | Poulie |
| 5 | SOA 000 070 | | | Scheibenschutz | Guard | Capot de protection des meules |
| 6 | SOA 010 000 | | | G. Schleifpinole | Quill | Fourreau porte pince |
| 7 | SOA 010 010 | | | Riemenscheibe | Pulley | Poulie |
| 8 | A2Z 280 010 | | | Spannzangenpinole | Quill | Fourreau porte pince |
| 9 | A2Z 280 020 | | | Spindel | Tapered arbor | Broche |
| 10 | A2Z 280 030 | | | Verschraubung | Screw joint | Fermeture à vis |
| 11 | A2Z 040 060 | | | Mutter | Nut | Ecrou |
| 12 | ZLG 80 4903 | NA4903/C152NA | | Nadellager | Needle bearing | Roulement à aiguilles |
| 13 | ZLG 00 1307 | E13 K7 | | Kugellager | Ball bearing | Roulement à billes |
| 14 | ZRG 21 0170 | WR17 | | Sprengring | Spring washer | Ressort helicoidal |
| | ZST 06 0156 | 1,5M6x6 DIN 7 | | Zylinderstift | Pin | Tige de serrage |
| 3 | ZFD 88 0226 | 2x2,6 DIN 6888 | | Scheibenfeder | Key | Ressort-spirale |
| | A2Z 281 000 | | | G. Anzugspindel | Draw bar | Tuyau de serrage |
| 17 | A2Z 280 050 | | | Zugrohr | Draw bar | Tuyau de serrage |
| 18 | A2Z 280 060 | | | Spannrad | Draw bar wheel | Volant de serrage |
| 19 | ZRM 05 0352 | 352x5x3 | | Keilriemen | V-belt | Courroie trapézoidale |
| 20 | ZSR 12 0630 | M6x30 DIN 912 | | Innensechskantschraube | Allen head screw | Vis six pans creux |
| 21 | ZST 17 0612 | M6x12 DIN 417 | | Gewindestift | Set screw | Vis |
| 22 | ZST 16 0808 | AM8x8 DIN 916 | | Gewindestift | Set screw | Vis |
| 23 | ZMU 31 0800 | M8 DIN 6331 | | Sechskantmutter | Nut | Ecrou hexagonal |
| 24 | ZHL 81 0220 | 2x20 DIN 1481 | | Spannhülse | Pin | Tige de serrage |
| 25 | SOA 000 050 | | | Dorn | Tapered arbor | Arbre |
| 26 | SOA 000 060 | | | Spindel | Tapered arbor | Broche |
| 27 | A2A 040 060 | | | Mutter | Nut | Ecrou |
| 28 | A2A 090 020 | | | Gegenscheibe | Washer | Contre plateau |
| 29 | A2Z 410 050 | | | Zylinderstift | Pin | Tige de serrage |
| 30 | ZSR 84 0310 | M3x10 DIN 84 | | Zylinderschraube | Flat head screw | Vis de blocage |
| 31 | ZSB 25 0320 | A3,2 DIN 125 | | Scheibe | Washer | Rondelle |
| | ZWZ 55 0016 | | | Schleifscheibe | Grinding wheel | Meule |
| 3 | ZMO 50 0 * | | | Motor | Motor | Moteur |
| 34 | ZME 15 1 * | | | Stator | Stator | Stator |
| 35 | ZME 15 0 * | | | Rotor | Rotor | Rotor |
| 36 | ZME 15 0004 | | | Lagerschild | Bearing end plate | Flasquet-palier |
| 37 | ZME 15 0005 | | | Lagerschild | Bearing end plate | Flasquet-palier |
| 38 | ZLG 62 0000 | 6200 | | Rillenkugellager | Ball bearing | Roulement à billes |
| 39 | ZLG 06 0800 | 608 EL8 | | Rillenkugellager | Ball bearing | Roulement à billes |
| 40 | ZME 15 0008 | | | Ausgleichscheibe | Washer | Entretoise |
| 41 | ZME 15 0000 | | | Kohlebürste | Brush | Charbon |
| 42 | ZME 15 0001 | | | Kohlenhalter-Kappe | Brush cap | Capuchon charbon |
| 43 | ZME 15 0010 | | | Schraube | Clamping screw | Boulon-tirant |
| 44 | ZME 15 0009 | | | Filz | Felt washer | Feutre |
| 45 | ZME 15 0007 | | | Kondensator | Condensor | Condensateur |
| 46 | ZME 15 0002 | | | Dichtung f. Kappe | Packing | Joint d'etanchéité |
| 47 | ZME 15 0003 | | | Statorgehäuse | Casing of Stator | Carter du stator |

*) Bei Bestellung bitte Spannung angeben.
In your orders please indicate voltage.
A la commande specifier le voltage.

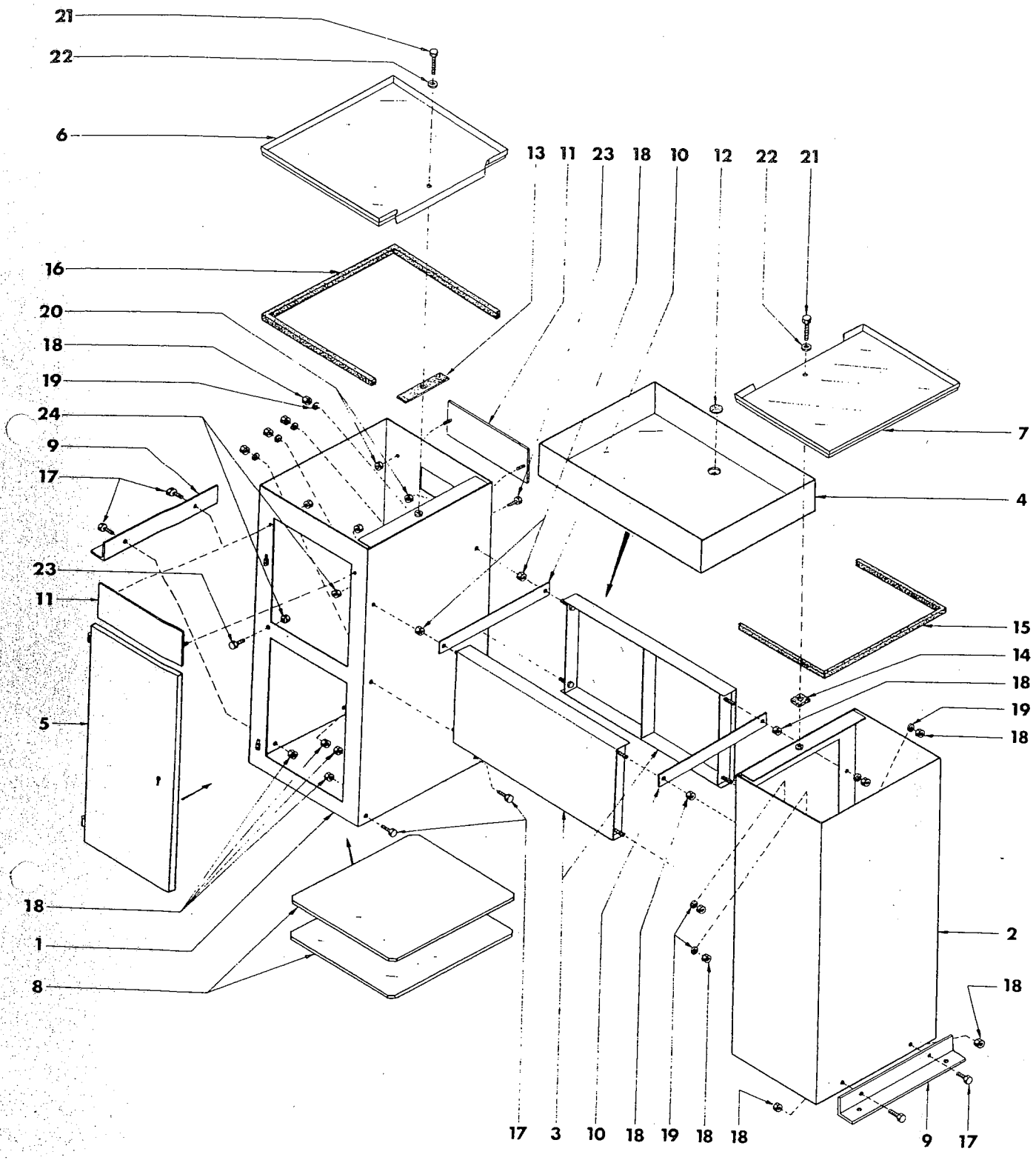
21
22
6
13
11
23
18
10
12
22
21
16
20
18
19
24
9
17
7
4
23
11
15
14
18
19
18
5
18
1
8
2
18
17
3
10
18
19
18
18
9
17

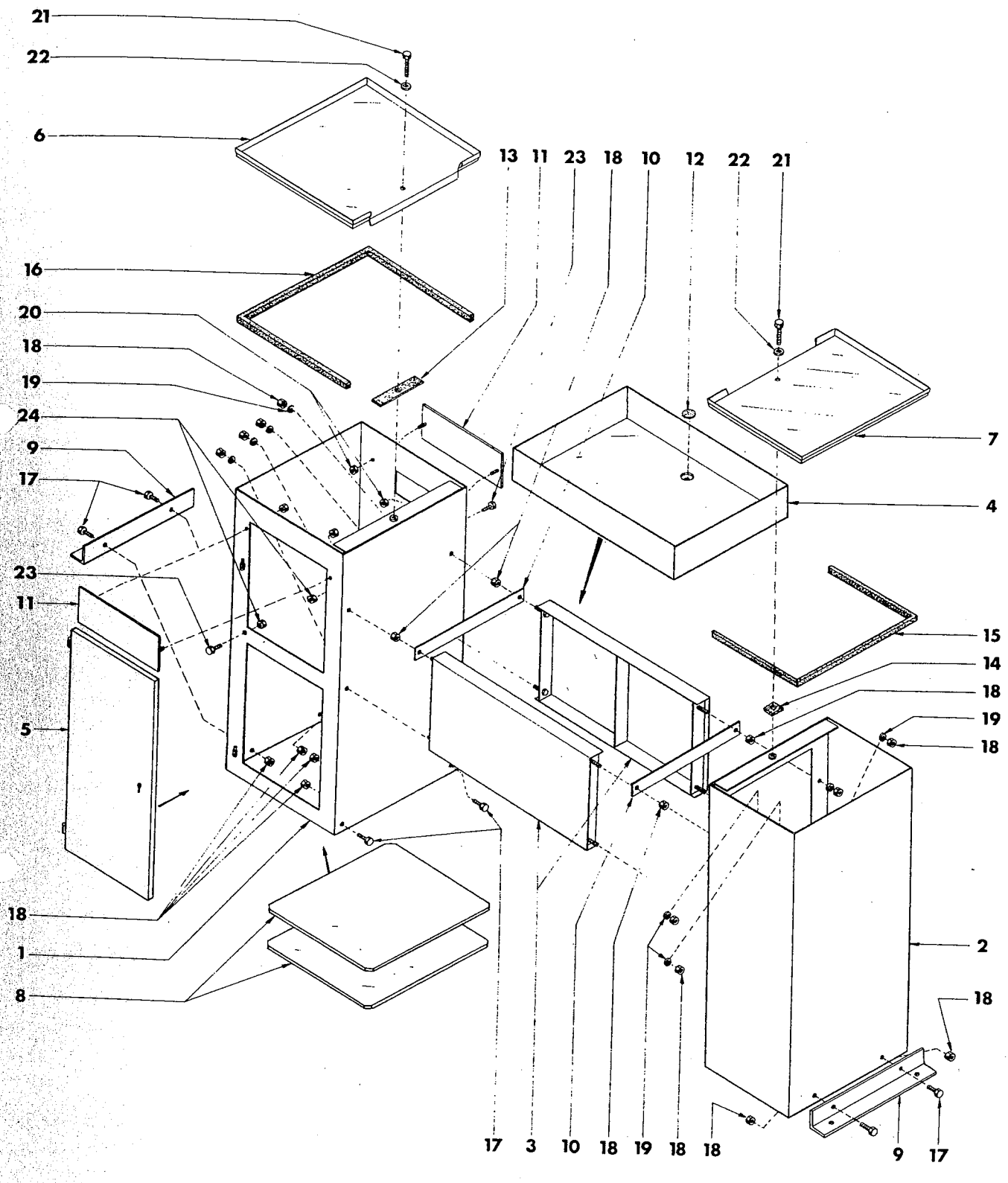
21
22
6
13
11
23
18
10
12
22
21
16
20
18
19
24
9
17
7
4
23
11
15
14
18
19
18
5
18
1
8
2
18
17
3
10
18
19
18
18
9
17

| | | | | G. Maschinenständer | Machine stand | Montant |
|---|---|---|---|---|---|---|
| Pos | Ref. No. | DIN | | BENENNUNG | DESCRIPTION | DÉSIGNATION |
| 1 | C4Z 220 010 | | | Linker Ständerfuß | Table leg left | Pied gauche |
| 2 | C4Z 220 020 | | | Rechter Ständerfuß | Table leg right | Pied droît |
| 3 | C4Z 220 030 | | | Mittelteil | Mid-section | Plaque de jonction |
| 4 | C4Z 220 040 | | | Spanwanne | Chip tray | Bac à copeaux |
| 5 | C4Z 220 050 | | | Tür | Door | Porte |
| 6 | C4Z 220 060 | | | Linke Tasse | Holder | Couvercle grand |
| 7 | C4Z 220 070 | | | Rechte Tasse | Holder | Couvercle petit |
| 8 | C4Z 220 080 | | | Einlageplatte | Insert | Tole mitoyen |
| 9 | C4Z 220 110 | | | Winkel | Angle plate | Corniere |
| 10 | C4Z 220 140 | | | Auflageblech | Face plate | Support bac à copeaux |
| 11 | C4Z 220 161 | | | Deckel | Cover | Couvercle |
| 12 | C4Z 220 150 | | | Abflußgitter | Sink grid | Tamis en fil metallique |
| 13 | C4Z 220 090 | | | Gummieinlage | Rubber packing | Piece intercalaire caoutchouc |
| 14 | C4Z 220 100 | | | Gummieinlage | Rubber packing | Piece intercalaire caoutchouc |
| 15 | C4Z 220 120 | | | Moosgummi | Sectional strandrubber | Bande caoutchouc d'etancheite |
| 16 | C4Z 220 130 | | | Moosgummi | Sectional strandrubber | Bande caoutchouc d'etancheite |
| 17 | ZSR 33 0812 | M8x12 DIN 933 | | Sechskantschraube | Hexagon head screw | Vis 6 pans |
| 18 | ZMU 34 0800 | M8 DIN 934 | | Mutter | Hexagon nut | Ecrou 6 pans |
| 19 | ZRG 27 0080 | A8 DIN 127 | | Federring | Spring washer | Rondelle grower |
| 20 | ZMU 34 0600 | M6 DIN 934 | | Mutter | Hexagon nut | Ecrou 6 pans |
| 21 | ZSR 33 1035 | M10x35 DIN 933 | | Sechskantschraube | Hexagon head screw | Vis 6 pans |
| 22 | ZSB 25 1050 | B10,5 DIN 125 | | Scheibe | Washer | Rondelle |
| 23 | ZSR 33 0508 | M5x8 DIN 933 | | Sechskantschraube | Hexagon head screw | Vis 6 pans |
| 24 | ZMU 34 0500 | M5 DIN 934 | | Mutter | Hexagon nut | Ecrou 6 pans |
| | C4Z 220 170 | | | EMCO-Folie | EMCO | EMCO |

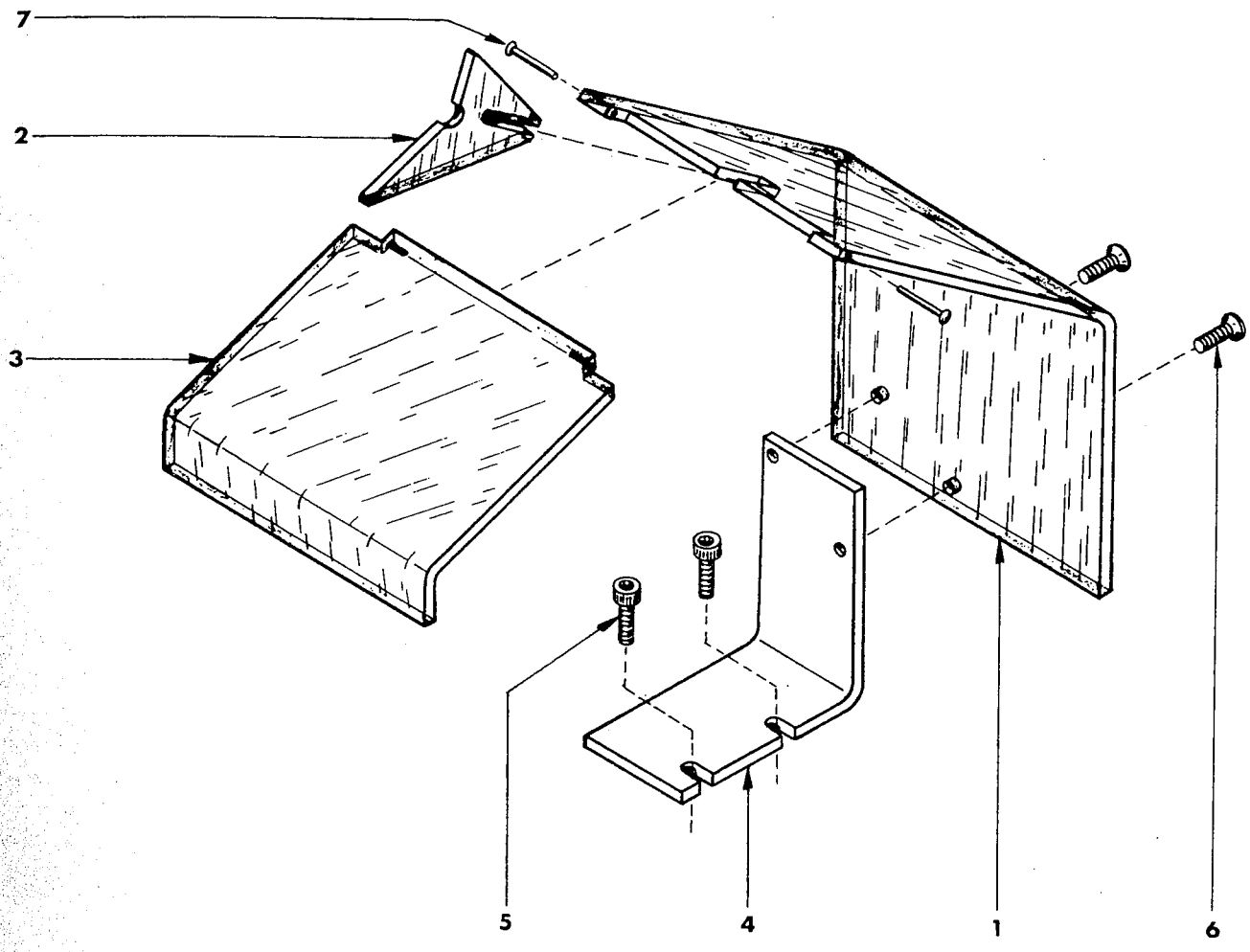


| | | | | G. Späneschutz | Chip guard | Pare-copeaux |
|---|---|---|---|---|---|---|
| Pos | Ref.No. | DIN | | BENENNUNG | DESCRIPTION | DÉSIGNATION |
| 1 | C3Z 330 010 | | | Späneschutz | Chip guard | Pare-copeaux |
| 2 | C3Z 330 020 | | | Anschlag | Stop | Butée |
| 3 | C3Z 330 030 | | | Deckel | Cover | Couvercle |
| 4 | C3Z 330 040 | | | Befestigungswinkel | Angle plate | Cornière |
| 5 | ZSR 12 0612 | M6x12 DIN 912 | | Innensechskantschraube | Socket head screw | Vis 6 pans creux |
| 6 | ZSR 63 0410 | M4x10 DIN 63 | | Senkschraube | Countersunk screw | Vis tête fraisée |
| 7 | ZNI 60 0320 | 3x20 DIN 660 | | Halbrundkopfniete | Rivet | Rivet |

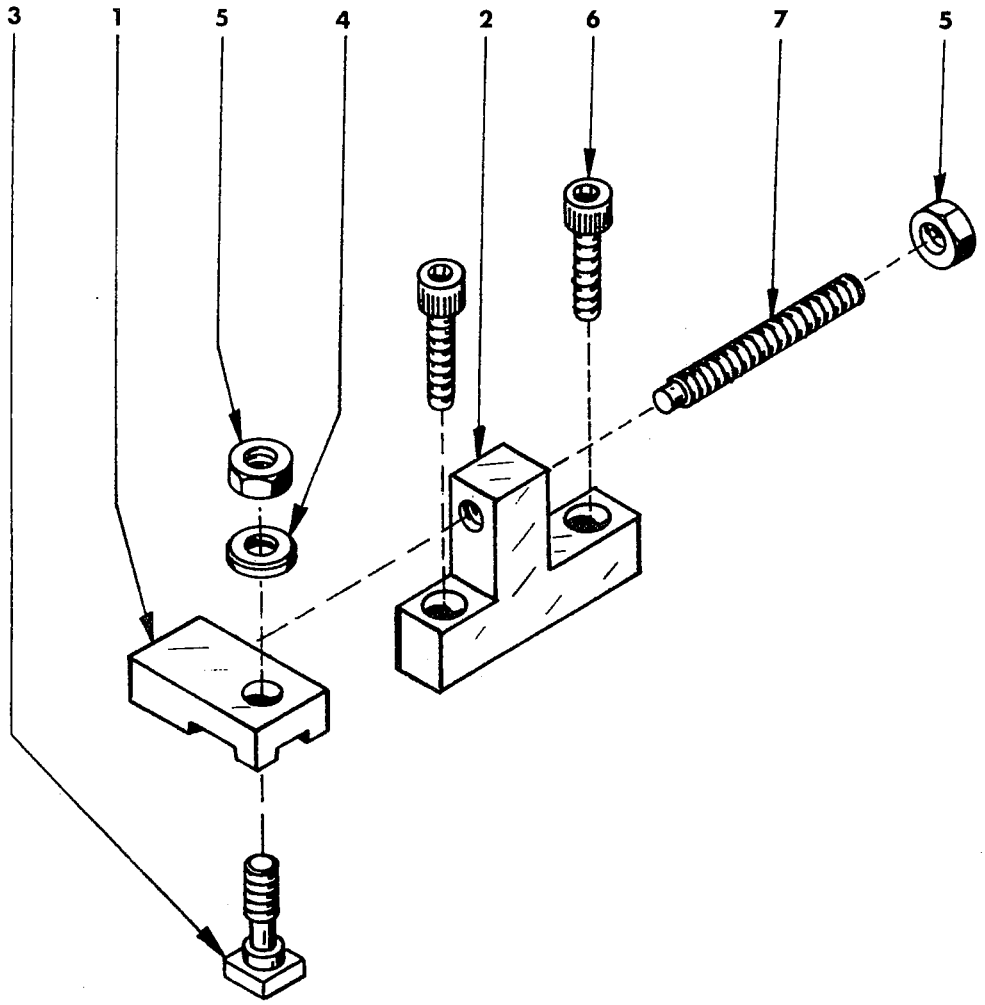


| | | | | G. Plananschlag | Facing stop | Butée transversale |
|---|---|---|---|---|---|---|
| Pos | Ref. No. | DIN | | BENENNUNG | DESCRIPTION | DÉSIGNATION |
| 1 | C4Z 010 010 | | | Anschlag | Stop | Butée |
| 2 | C4Z 010 020 | | | Anschlagbock | Stop block | Conte butée |
| 3 | C3A 050 040 | | | Nutschraube | T-Nut | Glissière |
| 4 | ZSB 25 0840 | B8,4 DIN 125 | | Scheibe | Washer | Rondelle |
| 5 | ZMU 34 0800 | M8 DIN 934 | | Sechskantmutter | Nut | Ecrou |
| 6 | ZSR 12 0620 | M6x20 DIN 912 | | Innensechskantschraube | Socket head screw | Vis 6 pans creux |
| 7 | ZST 17 0860 | M8x60 DIN 417 | | Gewindestift | Set screw | Vis pointeau |

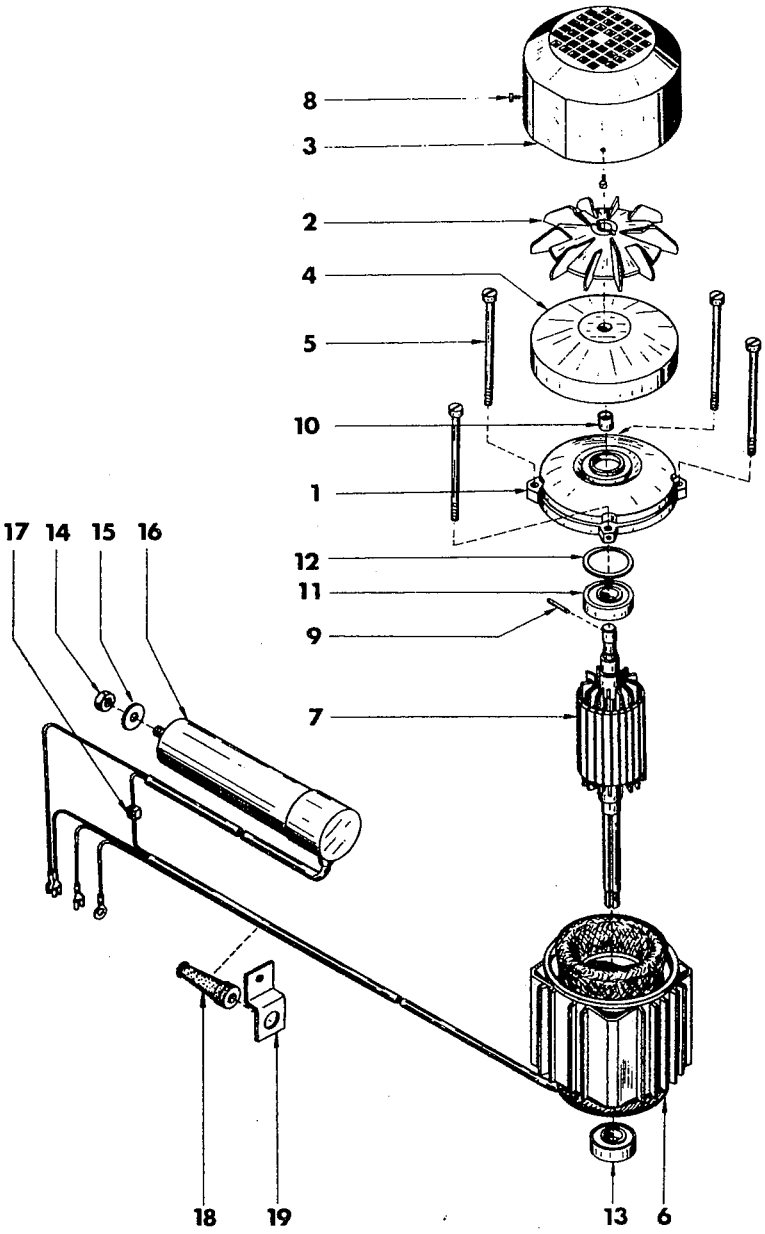


**4+10 Entfällt bei Drehstromausführung** — ersetzt durch Distanzhülse E2A 110 010

**Not applicable with three-phase make** — replaced by spacer sleeve E2A 110 010

**Ne s'applique pas en version triphasé** — remplacée par la douille d'ecartement E2A 110 010

* Bei Bestellung bitte Spannung und Frequenz angeben.
In your orders please indicate voltage and frequency.
A la commande spécifier le voltage et la fréquence du moteur.

| | VERTIKALE | | | Motor F F D | Motor F F D | Moteur F F D |
|---|---|---|---|---|---|---|
| Pos | Ref.No. | DIN | | BENENNUNG | DESCRIPTION | DÉSIGNATION |
| 1 | E1A 100 050 | | | Lagerschild | Bearing bracket | Flasque superieur moteur |
| 2 | E1A 100 030 | | | Lüfterflügel | Fan | Ventilateur |
| 3 | E1A 100 020 | | | Lüfterhaube | End shield | Carter du ventilateur |
| 4 | E1A 100 040 | | | Schwungrad | Flywheel | Volant |
| 5 | E1A 100 060 | | | Schraube | Screw | Vis |
| 6 | | | | Stator * | Stator * | Stator * |
| 7 | ZMR 15 3200 | | | Rotor * | Rotor * | Rotor * |
| 8 | ZSR 84 0304 | M3x4 DIN 84 | | Zyl. Schraube | Flat head screw | Vis cylindriques |
| 9 | ZHL 81 0322 | 3x22 DIN 1481 | | Spannhülse | Lock pin | Manchon de goupille |
| 10 | ZRG 30 1010 | BN 10x10 | | Toleranzring | Locking collar | Bague de tolerance |
| 11 | ZLG 62 0102 | 6201 - 2Z | | Kugellager | Ball bearing | Roulement à billes |
| 12 | ZSB 00 6201 | | | Scheibe | Washer | Rondelle |
| 13 | ZLG 62 0102 | 6201 - 2Z | | Kugellager | Ball bearing | Roulement à billes |
| 14 | ZMU 34 0800 | M8 DIN 934 | | Mutter | Nut | Ecrou |
| 5 | E1A 100 010 | | | Scheibe | Washer | Rondelle |
| | ZKO 15 3853 | | | Kondensator 8µF 300V | Condenser 8µF 300V | Condensateur 8µF 300V |
| 16 | ZKO 15 3520 | | | Kondensator 20µF 330V | Condenser 20µF 330V | Condensateur 20µF 330V |
| 17 | ZEL 01 0001 | EDK1 | | Dosenklemme | Cable connector | Connector unipolaire |
| 18 | ZEL 70 0080 | T-8 | | Knickschutztülle | Protective coating | Passefil caoutchouc |
| 19 | E2A 100 010 | | | Winkelblech | Angle plate | Cornière |

| | VERTIKALE | | | Motor Garvens | Motor Garvens | Moteur Garvens |
|---|---|---|---|---|---|---|
| Pos | Ref.No. | DIN | | BENENNUNG | DESCRIPTION | DÉSIGNATION |
| 1 | E1A 100 050 | | | Lagerschild | Bearing bracket | Flasque superieur moteur |
| 2 | E1A 100 030 | | | Lüfterflügel | Fan | Ventilateur |
| 3 | E1A 100 020 | | | Lüfterhaube | End shield | Carter du ventilateur |
| 4 | E1A 100 040 | | | Schwungrad | Flywheel | Volant |
| 5 | E1A 100 061 | | | Schraube | Screw | Vis |
| 6 | | | | Stator* | Stator* | Stator* |
| 7 | ZMR 16 3002 | | | Rotor* | Rotor* | Rotor* |
| 8 | ZSR 84 0304 | M3x4 DIN 84 | | Zyl. Schraube | Flat head screw | Vis cylindriques |
| 9 | ZHL 81 0322 | 3x22 DIN 1481 | | Spannhülse | Lock pin | Manchon de goupille |
| 10 | ZRG 30 1010 | BN10x10 | | Toleranzring | Locking collar | Bague de tolerance |
| 11 | ZLG 62 0102 | 6201 - 2Z | | Kugellager | Ball bearing | Roulement à billes |
| 12 | ZSB 00 6201 | | | Scheibe | Washer | Rondelle |
| 13 | ZLG 62 0102 | 6201 - 2Z | | Kugellager | Ball bearing | Roulement à billes |
| 14 | ZMU 34 0800 | M8 DIN 934 | | Mutter | Nut | Ecrou |
| 15 | E1A 100 010 | | | Scheibe | Washer | Rondelle |
| 16 | ZKO 15 3520 | | | Kondensator 20µF 330V | Condenser 20µF 330V | Condensateur 20µF 330V |
| 17 | ZEL 01 0001 | EDK1 | | Dosenklemme | Cable connector | Connector unipolaire |
| 18 | ZEL 70 0080 | T-8 | | Knickschutztülle | Protective coating | Passefil caoutchouc |
| 19 | E2A 100 010 | | | Winkelblech | Angle plate | Cornière |

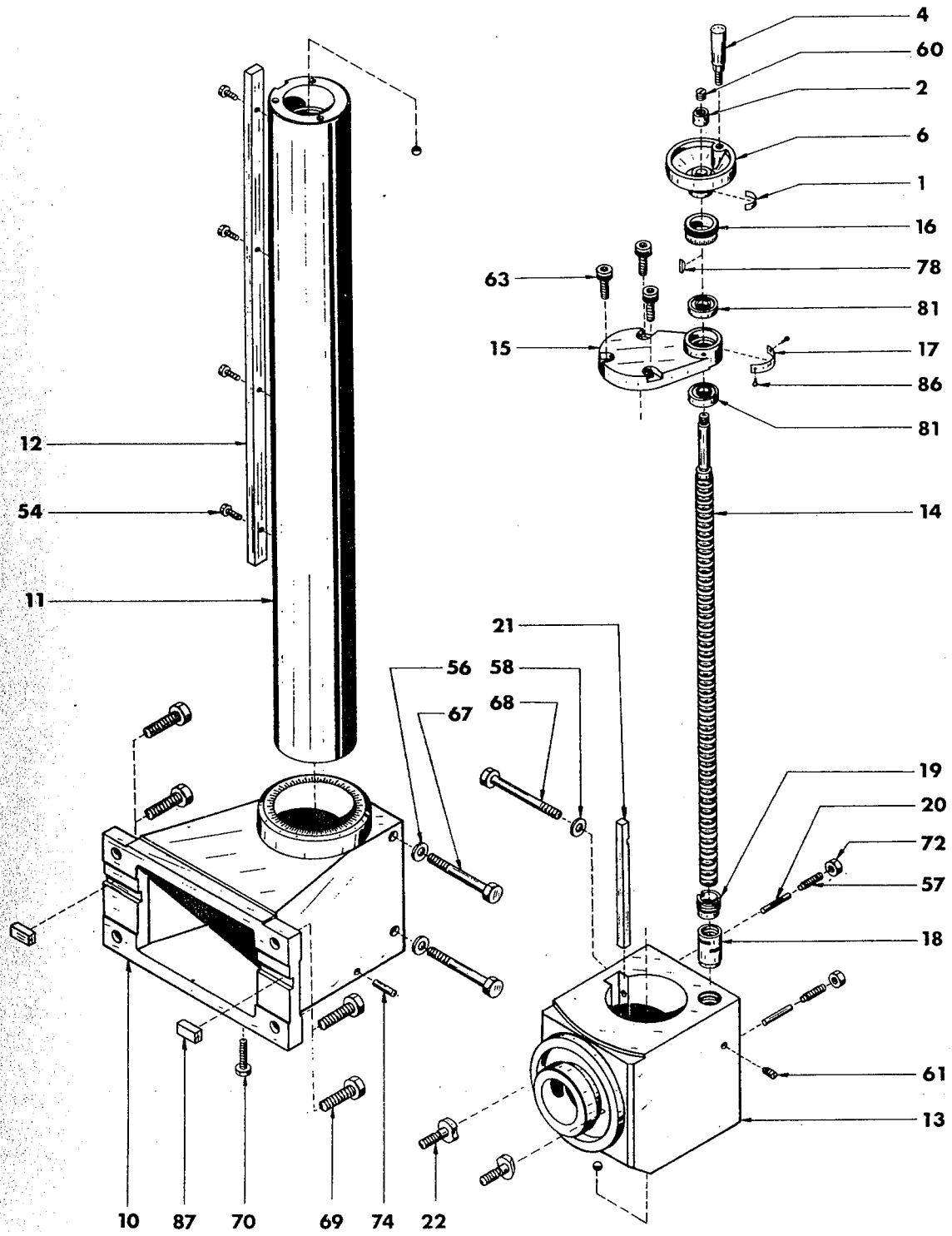
4
60
2
6
1
16
78
81
17
86
81
14
63
15
12
54
11
21
56
58
68
67
19
20
72
57
18
61
13
10
87
70
69
74
22

| | | | | | | |
|---|---|---|---|---|---|---|
| | | | | Vertikalvorrichtung M<br>Vertikalvorrichtung Ww | Vertical attachment M<br>Vertical attachment Ww | Colonne verticale M<br>Colonne verticale Ww |
| Pos | Ref. No. | DIN | | BENENNUNG | DESCRIPTION | DÉSIGNATION |
| 1 | B2A 000 020 | | | Bogenfeder | Spring | Ressort |
| 2 | B2A 000 100 | | | Mutter | Nut | Ecrou à 2 plats |
| 3 | B2A 010 080 | | | Druckfeder | Spring | Ressort |
| 4 | B2A 013 000 | | | Kegelgriff | Handle | Manneton |
| 5 | B2A 030 090 | | | Gleitstein | Cursor | Curseur |
| 6 | B2A 040 040 | | | Handrad | Handwheel | Volant |
| 7 | B2A 035 000 | | | Gr. Schalthebel | Lever switch | Manette de commande |
| 8 | B2A 035 010 | | | Schalthebel | Lever switch | Manette |
| 9 | B2A 035 020 | | | Schaltnabe | Hub | Moyeu |
| 10 | E1A 000 010 | | | Sockel | Pedestal | Socle support |
| 11 | E2A 000 020 | | | Vertikalsäule | Vertical column | Colonne verticale |
| 12 | E2A 000 030 | | | Führungsschiene | Guide rail | Guide verticale |
| 13 | E1A 000 040 | | | Vertikalschlitten | Vertical slide | Support poupée coulissant |
| 14 | E2A 000 050 | | | Vertikalspindel M | Vertical screw M | Vis mère M |
| | E2B 000 050 | | | Vertikalspindel Ww | Vertical screw Ww | Vis mère Ww |
| 15 | E1A 000 060 | | | Spindelträger | Lead screw mount | Palier supérieur vis mère |
| 16 | B2A 000 090 | | | Skalenring M | Micrometer collar M | Vernier M |
| | B2B 000 090 | | | Skalenring Ww | Micrometer collar Ww | Vernier Ww |
| 17 | B2A 000 060 | | | Skalenschild M | Plate M | Plaquette indicatrice M |
| | B2B 000 060 | | | Skalenschild Ww | Plate Ww | Plaquette indicatrice Ww |
| 18 | E1A 000 080 | | | Vertikalmutter M | Vertical nut M | Ecrou M |
| | E1B 000 080 | | | Vertikalmutter Ww | Vertical nut Ww | Ecrou Ww |
| 19 | E1A 000 090 | | | Gewindering | Threaded ring | Vis réglage jeu |
| 20 | E1A 000 100 | | | Einstellbolzen | Bolt | Vis de réglage |
| 21 | E1A 000 110 | | | Druckleiste | Gib | Lardon blocage |
| 22 | E1A 000 120 | | | Nutenschraube | T-nut screw | Boulons en T |
| 23 | E1A 000 130 | | | Vertikalkopf | Vertical head | Poupée verticale nue |
| 24 | E1A 000 140 | | | Achse | Arbor | Axe |
| 25 | E1A 000 150 | | | Druckscheibe | Disc | Rondelle intermediaire |
| 26 | E1A 000 160 | | | Triebling | Driving point | Axe crante de serrage |
| 27 | E1A 000 170 | | | Drehgriff | Turn knob | Bouton molette |
| 28 | E1A 000 180 | | | Rückholfeder | Coil spring | Ressort boudin |
| 29 | E1A 000 190 | | | Anschlagring M | Stopper M | Piece d'arrêt M |
| | E1B 000 190 | | | Anschlagring Ww | Stopper Ww | Piece d'arrêt Ww |
| 30 | E1A 000 220 | | | Abdrückmutter | Nut | Ecrou |
| 31 | E1A 000 230 | | | Deckel | Cover | Couvercle |
| 32 | E1B 000 240 | | | Drehzahlschild (60Hz) | Speed plate | Plaque indicatrice 60 périods |
| | E1A 000 240 | | | Drehzahlschild (50Hz) | Speed plate | Plaque indicatrice 50 périods |
| 33 | E1A 000 250 | | | Getriebedeckel | Cover | Couvercle supér.-support molette |
| 34 | E1A 000 260 | | | Skalenschild M | Plate M | Plaquette indicatrice M |
| | E1B 000 260 | | | Skalenschild Ww | Plate Ww | Plaquette indicatrice Ww |
| 35 | E1A 000 270 | | | Schaltstange I | Wipper I | Axe de commande balladeur I |
| 36 | E1A 000 280 | | | Schaltstange II | Wipper II | Axe de commande balladeur II |
| 37 | E1A 000 290 | | | Stiftschraube | Thread stud | Goujon |
| | E1A 010 000 | | | Gr. Pinole | Spindle quill complete | Ensemble fourreau broche |
| 38 | E1A 010 010 | | | Pinole | Spindle quill | Fourreau nu |
| 39 | E1A 010 020 | | | Spindel | Spindle | Broche |
| 40 | E1A 010 030 | | | Mutter | Nut | Bague arret filetée exterieur |
| 41 | E1A 010 040 | | | Mutter | Nut | Ecrou arret filetée interieur |
| 42 | ZLG 60 0419 | 6004Y/C3 WM074 | | Kugellager | Ball bearing | Roulement à billes |
| 43 | ZLG 81 4013 | P6RNA030x40x13 | | Nadellager | Needle bearing | Roulement à aiguilles |
| 44 | ZSB 10 8402 | 5528x40x2 | | Stützscheibe | Washer | Rondelle |
| 45 | E1A 011 000 | | | Gr. Schaltrad | Gear wheel | Pignon double |

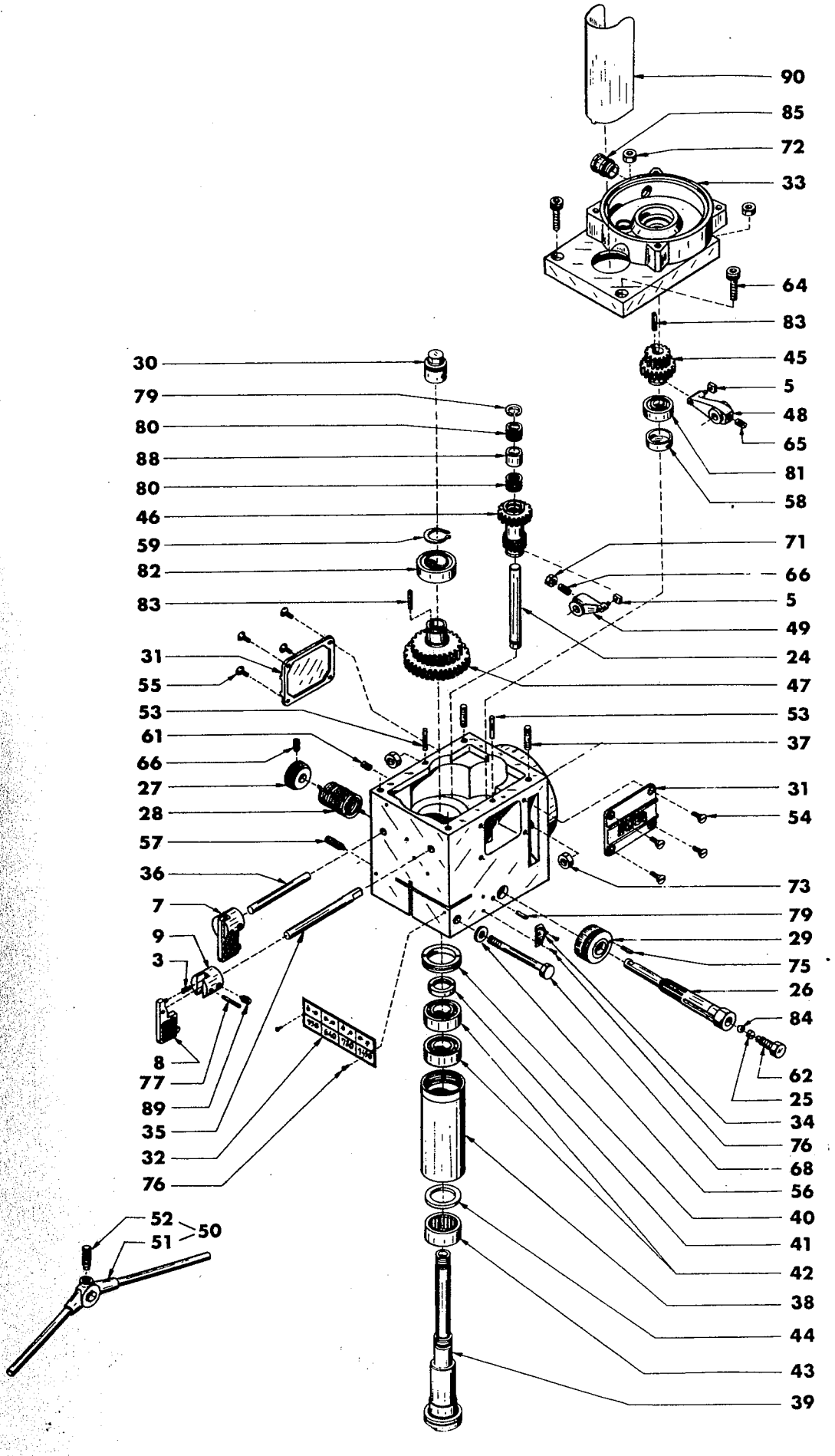
90
85
72
33
64
83
45
5
48
65
81
58
71
66
5
49
24
47
53
37
31
54
73
79
29
75
26
84
62
25
34
76
68
56
40
41
42
38
44
43
39
30
79
80
88
80
46
59
82
83
31
55
53
61
66
27
28
57
36
7
9
3
8
77
89
35
32
76
52
51
50

| | | | | Vertikalvorrichtung M<br>Vertikalvorrichtung Ww | Vertical attachment M<br>Vertical attachment Ww | Colonne verticale M<br>Colonne verticale Ww |
|---|---|---|---|---|---|---|
| Pos | Ref. No. | DIN | | BENENNUNG | DESCRIPTION | DÉSIGNATION |
| 46 | E1A 012 000 | | | Gr. Schieberad | Shiftgear | Pignon double coulissant |
| 47 | E1A 013 000 | | | Gr. Zahnrad | Gear block | Pignon double coulissant |
| 48 | E1A 014 000 | | | Gr. Schaltarm I | Selector shift fork lever | Sous groupe fourche d'embrayage |
| 49 | E1A 015 000 | | | Gr. Schaltarm II | Selector shift fork lever | Sous groupe fourche d'embrayage |
| 50 | E1A 020 000 | | | Gr. Schlüssel | Key | Clé course axiale de broche |
| 51 | E1A 021 000 | | | Schlüsselkörper | Body | Corps |
| 52 | E1A 020 010 | | | Rändelschraube | Thumb screw | Vis blocage |
| 53 | ZST 06 0524 | 5M6x24 DIN 7 | | Zylinderstift | Pin | Pion de centrage |
| 54 | ZSR 84 0408 | M4x8 DIN 84 | | Zylinderschraube | Pin | Vis cylindrique |
| 55 | ZSR 91 0408 | M4x8 DIN 964 | | Linsensenkschraube | Flat head screw | Vis tête fraisée |
| 57 | ZST 17 0618 | M6x18 DIN 417 | | Gewindestift | Stud | Vis réglage sans tête |
| 58 | ZDK 43 2200 | 2Z DIN 443 | | Verschlußdeckel | Cover | Bouchon |
| [illegible] | ZRG 71 2012 | 20x1,2 DIN 471 | | Sicherungsring | Retaining Ring | Circlips |
| [illegible] | ZST 51 0806 | M8x6 DIN 551 | | Gewindestift | Stud | Vis |
| 61 | ZST 53 0508 | M5x8 DIN 553 | | Gewindestift | Stud | Vis |
| 62 | ZSR 61 0825 | M8x25 DIN 561 | | Sechskantschraube | Hexagonal screw | Ecrou hexagonal |
| 63 | ZSR 12 0616 | M6x16 DIN 912 | | Innensechskantschraube | Allen head screw | Vis six pans creux |
| 64 | ZSR 12 0620 | M6x20 DIN 912 | | Innensechskantschraube | Allen head screw | Vis six pans creux |
| 65 | ZST 16 0508 | AM5x8 DIN 916 | | Gewindestift | Stud | Vis |
| 66 | ZST 16 0512 | AM5x12 DIN 916 | | Gewindestift | Stud | Vis |
| 67 | ZSR 31 0860 | M8x60 DIN 931 | | Sechskantschraube | Hexagonal screw | Ecrou hexagonal |
| 68 | ZSR 31 0870 | M8x70 DIN 931 | | Sechskantschraube | Hexagonal screw | Ecrou hexagonal |
| 69 | ZSR 33 1030 | M10x30 DIN 933 | | Sechskantschraube | Hexagonal screw | Vis hexagonale |
| 71 | ZMU 34 0500 | M5 DIN 934 | | Mutter | Nut | Ecrou de réglage |
| 72 | ZMU 34 0600 | M6 DIN 934 | | Mutter | Nut | Ecrou de réglage |
| 73 | ZMU 34 0800 | M8 DIN 934 | | Mutter | Nut | Ecrou de réglage |
| 74 | ZST 72 0620 | 6x20 DIN 1472 | | Paßkerbstift | Pin | Clavette cylindrique |
| 75 | ZHL 81 0312 | 3x12 DIN 1481 | | Spannhülse | Lock pin | Axe |
| 76 | ZNA 76 0144 | 1,4x4 DIN 1476 | | Halbrundkerbnagel | Rivet | Rivet de fixation |
| 77 | ZHL 81 0322 | 3x22 DIN 1481 | | Spannhülse | Lock pin | Axe |
| 78 | ZFD 88 0337 | 3 x3,7 DIN 6888 | | Scheibenfeder | Key | Clavette woodruff |
| [illegible] | ZRG 20 0160 | BR16 | | Sicherungsring | Retaining ring | Anneau de retenue circlips |
| [illegible] | ZLG 78 1210 | HK 1210 | | Nadelhülse | Needle bearing | Roulement à aiguilles |
| 81 | ZLG 60 0002 | 6000 - 2Z | | Kugellager | Ball bearing | Roulement à billes |
| 82 | ZLG 60 0402 | 6004 - 2Z | | Kugellager | Ball bearing | Roulement à billes |
| 83 | ZFD 10 3320 | M3/3x20 | | Zapfenfeder | Spring | Ressort |
| 84 | ZKG 00 1060 | 6,0GK3 DIN 5401 | | Stahlkugel | Ball | Bille |
| 85 | ZPG 02 0700 | PG7 | | Anbauverschraubung | Connection | Dispositiv de blocage cable électr. |
| 86 | ZNA 76 0142 | 1,4x2,5 DIN 1476 | | Halbrundkerbnagel | Rivet | Rivet de fixation |
| 87 | B2A 000 430 | | | Keil | Key | Ressort |
| 88 | E1A 000 100 | | | Büchse | Bushing | Boîte |
| 89 | ZST 17 0608 | M6x8 DIN 417 | | Gewindestift | Stud | Vis |
| 90 | E1A 000 330 | | | Schutzblech | Spindle guard | Protection |