skanti

INSTRUCTION MANUAL

4

SSB RECEIVER
Type R5001

AND POWER PACKS
P5010 , 5011 AND 5012

2000 1-12-77 910 000 11
3 udg.

R 5001, P 5010, P 5011 and P 5012

INSTRUCTION MANUAL

CONTENTS

1.	INTRODUCTION	1- 1
2.	OPERATING INSTRUCTIONS	2- 1
2.1.	Tuning to 500 kHz and 2182 kHz	2- 1
2.2.	Tuning to an A1, F1 or SSB Station in the Preselector Range	2- 1
2.3.	Tuning to an F1 or SSB Station in the Duplex Ranges	2- 1
2.4.	Tuning to an AM Station	2- 2
2.5.	Operating Controls and Their Functions	2- 2
3.	INSTALLATION	3- 1
3.1.	Mounting the Cabinet	3- 1
3.2.	Disassembling the Receiver	3- 1
3.3.	Connection to the Permanent Installation	3- 1
3.4.	Earth Connection	3- 1
3.5.	Antenna	3- 1
3.6.	Exchanging the Input Impedance	3- 2
3.7.	Remote Speaker	3- 2
3.8.	Muting	3- 2
3.9.	Replacement of Power Packs	3- 2
4.	TECHNICAL DATA	4- 1
5.	TECHNICAL DESCRIPTION	5- 1
5.1.	Mechanical	5- 1
5.2.	Circuit Description, General	5- 1
5.3.	Circuit Summary, Signal Path	5- 1
5.4.	Circuit Description, Signal Path Boards	5- 2
5.5.	Circuit Summary, Frequency Synthesizer	5- 4
5.6.	Circuit Description, Frequency Synthesizer	5- 5
5.7.	Circuit Summary, Frequency Selection	5- 7
5.8.	Circuit Description, Frequency Selection	5- 8
5.9.	Circuit Summary, P 5010, 24V DC Power Pack	5-10
5.10.	Circuit Description, P 5010, 24V DC Power Pack	5-10

5.11.	Circuit Summary, P 5011, AC Power Pack	5-11
5.12.	Circuit Description, P 5011, AC Power Pack	5-11
5.13.	Circuit Summary, P 5012, 24 V DC/AC Power Pack	5-11
5.14.	Cicuit Description, P5012, 24V DC/AC Power Pack	5-12
6.	**SIMPLE SERVICE**	**6- 1**
6.1.	Incorrect Operation	6- 1
6.2.	Battery	6- 1
6.3.	Replacement of Fuses	6- 1
7.	**REPAIR AND ALIGNMENT**	**7- 1**
7.1.	Introduction	7- 1
7.2.	Cross Slot Screws	7- 1
7.3.	Locating Subunits and Components	7- 1
7.4.	Locating Faults	7- 1
7.5.	Test Points	7- 1
7.6.	AC Voltages	7- 1
7.7.	DC Voltages	7- 2
7.8.	Typical Sensitivity Levels	7- 2
7.9.	Adjustments	7- 2
7.10.	Realignment of Input Filters /202\ or /216\	7- 3
7.11.	/203\ Realignment of 2nd Mixer and Clarifier Oscillator	7- 6
7.12.	/205\ Realignment of IF Amplifier Detector and AGC	7- 6
7.13.	/220\ Realignment of AF Amplifier	7- 7
7.14.	/220\ Frequency Adjustment of the TCXO	7- 7
7.15.	/209\ Realignment of VCO_1 and VCO_2	7- 7
7.16.	/208\ Realignment of Loop Translator	7- 8
7.17.	/210\ Realignment of VCO_3	7- 9
8.	**PARTS LISTS AND CIRCUIT DIAGRAMS**	**8- 1**
8.1.	Numbering	8- 1
8.2.	Switches	8- 1
8.3.	Terminals	8- 1
8.4.	Voltages	8- 1
8.5.	Test Points	8- 1
8.6.	Symbol Explanation	8- 1
8.7.	Abbreviations	8- 4
8.8.	Parts List	8- 5
8.9.	Diagrams	8-50

LIST OF ILLUSTRATIONS

	Page
Front Panel and Operating Controls	1- 2
Mounting of R5000,1,2	3- 3
Location of Circuit Boards Receiver R5001	8-48
Location of Circuit Boards Power Pack P5010, P5011 and P5012	8-49

LIST OF DIAGRAMS

Block Diagram, Frequency Synthesizer	8-51
Block Diagram, Frequency Selection	8-52
Block Diagram, Signal Path	8-53
Block Diagram, P5010 24V DC Power Pack	8-55
Block Diagram, P5011 AC Power Pack	8-56
Block Diagram, P5012 24 DC/AC Power Pack	8-57
/215\ Wiring Diagram R5001	8-59
/202\ and /216\ Input Filters	8-61
/203\ 2. Mixer	8-63
/217\ IF Filters	8-65
/218\ IF Filters	8-67
/205\ IF Amplifier Detector and AGC	8-71
/220\ AF Amplifier	8-73
/207\ Frequency Dividers	8-75
/208\ Loop Translator	8-77
/209\ VCO_1 and VCO_2	8-79
/210\ VCO_3	8-81
/211\ Display and Keyboard	8-83
/212\ Synthesizer Control	8-85
/213\ Filterboard	8-87
/214\ Loop 3- Divider	8-89
Power Pack Wiring Diagram P5010 DC	8-91
Power Pack Wiring Diagram P5011 AC	8-93
Power Pack Wiring Diagram P5012 24V DC/AC	8-95

1. Introduction

1.1. The R5001 marine and general purpose receiver is designed for use in a marine main radio station. The receiver has synthesized operation in the frequency range 10 kHz to 29,999.9 kHz.

The receiver is designed for reception of type F1, A1, A2, A2H, A3, A3H and upper-sideband A3A and A3J signals. It is fully transistorized, and widespread use is made of integrated circuits. These features, in connection with the fact that no crystal ovens are used, cause the receiver to be ready for operation immediately after having been swiched on.

Depending on the power pack installed in it, the receiver can be powered from a 24 V battery or from AC voltages normally occurring in practice.

The dimensions match a 19-inch standard rack.

Because we are constantly processing the experience gained during the production and operation of our equipment, it is possible for minor modifications to occur relative to the information given in this instruction manual. Wherever practicable, however, any corrections will be listed on a correction sheet at the back of the front cover of this manual.

FRONTPANEL AND OPERATING CONTROLS
R5001

2. Operating instructions

2.1. Tuning to 500 kHz and 2182 kHz

1. Set BAND-switch to 500 kHz or 2182 kHz
2. Turn SENSITIVITY fully clockwise
3. Adjust VOLUME for a convenient volume.

NOTE: When the BAND-switch is set to 500 kHz or 2182 kHz the mode A3. A2-AGC ON is automatically selected, and the MODE-switch can therefore be set to any position.

2.2. Tuning to an A1, F1 or SSB Station in the Preselector Range

1. Set BAND-switch to the desired band
2. Set MODE-switch to A1, F1 or A3J/A3A and switch the AGC on
3. Set BANDWIDTH switch to the desired bandwidth
4. Turn SENSITIVITY fully clockwise
5. Adjust VOLUME for a convenient volume
6. Select the desired frequency with the keyboard
7. Adjust PRESELECTOR for a maximum level
8. Adjust CLARIFIER/BFO for natural-sounding speech, when the desired station is modulated.

NOTE: Under certain circumstances it can be advantageous to use manual gain control of the receiver either in addition to the automatic gain control or with the automatic gain control switched off. This is done by turning the SENSITIVITY control anticlockwise until best reception is obtained and has the effect of reducing background noise coming up in speech pauses.

2.3. Tuning to an F1 or SSB Station in the Duplex Ranges

1. Set BAND-switch to the desired HF-band
2. Set MODE-switch to F1 or A3J/A3A and switch the AGC ON
3. Set BANDWIDTH-switch to the desired bandwidth
4. Turn SENSITIVITY fully clockwise
5. Adjust VOLUME for a convenient volume
6. Select the desired frequency with the keyboard
7. Adjust CLARIFIER for natural-sounding speech when the desired station is modulated.

NOTE: Under certain circumstances it can be advantageous to use manual gain control of the receiver either in addition to the automatic gain control or with the automatic gain control switched off. This is done by turning the SENSITIVITY control anticlockwise until best reception is obtained and has the effect of reducing background noise coming up in speech pauses.

2.4. Tuning to an AM Station

1. Set BAND-switch to the desired band (use the LP-filter .01-1.6 MHz or one of the Preselector Bands)
2. Set MODE-switch to A3.A2 and switch the AGC ON
3. Turn SENSITIVITY fully clockwise
4. Adjust VOLUME for a convenient volume
5. If the exact frequency of the station is known, select this with the keyboard. Otherwise select a nearby frequency with the keyboard and use the TUNING control to find the desired station
6. Adjust PRESELECTOR for maximum level if one of the Preselector Bands is used.

2.5. Operating Controls and Their Functions

SENSITIVITY	Manual adjustment of receiver RF gain
VOLUME	Manual adjustment of receiver AF gain.

The MODE-switch has four positions:

A3.A2	Reception of double and single-sideband modulation with full carrier.
A3J.A3A	Reception of single-sideband modulation with suppressed or reduced carrier.
F1	Reception of telex signals.
A1	Reception of unmodulated signals. The BFO is automatically switch on.

The BANDWIDTH switch has six positions:

WIDE

INTERMEDIATE

NARROW

V. NARROW

SSB

FI

DIMMER	Varies the illumination of the meter and the brightness of the display between full intensity and light extinguished.
ON/OFF	Disconnects the local speaker.
PHONES	Connection for headphones. Disconnects the local speaker.

The BAND-switch has 16 positions:

500 kHz	Fixed tuned bandpass filter.
2182 kHz	Fixed tuned bandpass filter.
.01-1.6 MHz	Low pass filter.
.06-.18, .18-.53, .53-1.6, 1.6-4, 4-12, 12-30 MHz	Tunable bandpass filters.
4, 6, 8, 12, 16, 22, 25 MHz	Fixed tuned bandpass filters, covering the maritime HF duplex and telex frequencies.
PRESELECTOR TUNING	Tuning control for the tunable bandpass filters.
CLARIFIER	For accurate tuning to frequency
BFO	For producing an audio frequency note when receiving signals of class of A1 emissions.
TUNING	For contineous tuning of the receiving frequency. With the MODE switch in position A3/A3H the tuning is in steps of 1 kHz, in any other position of the MODE switch in 100 Hz steps.
KEYBOARD	For selection of the wanted receiving frequency. The C key clears the display, while the LOCK key disables the TUNING knob.

3. Installation

Correct installation of the equipment is important for good results. Antenna and earth connections must be installed with the greatest care, especially where duplex telephony is desired.

3.1. Mounting the Cabinet

The R5001 cabinet is intended for table-top mounting. The drawing on page 3-3 show the drilling plan for the necessary holes.

3.2. Disassembling the Receiver

To open the receiver, remove the four front panel screws. Pull the chassis out of the cabinet and remove the connectors. The power pack is mounted in the bottom of the receiver cabinet. To remove the power pack, take off the top plate, remove the cables to the permanent installation and remove the power switch from the front plate. The power pack may now be lifted out, after loosening five screws.

3.3. Connection to the Permanent Installation

Check that the correct power pack is installed, and that the power pack (if for AC) is set for the correct mains voltage. Cable connections for installation of the R5001 appear on the drawings on pages 8-91, and 8-95.

3.4. Earth Connection

The receiver earth terminals are located at the back of the receiver cabinet and should be connected to earth using a length of 2.5 sqmm wire. This wire should be connected to a separate earth screw, which must not be shared by any other equipment. The earth lead should be run as far from the transmitter earth lead as is practicable.

Other cables should be run as far away from the receiver earth leads as possible and under no circumstances parallel with it, closer than 0.2m.

3.5. Antenna

Length: 7-30 metres. The receiving antenna should be brought in by a length of coaxial cable, which should be as short as possible, expecially in the case of short antennas.

In order to minimize duplex noise, the transmitting and receiving antennas should be kept as far away from each other as possible. Stays, wires, steel masts etc. should either be earthed effectively or isulated.

Likewise in order to minimize duplex noise, every other electrical installation such as cable braidings (screens) and instruments should be earthed effectively, and the instruments in question should be fitted with noise-interference suppression devices.

The Antennas should be suspended well in the clear, away from objects whose influence on the antennas may vary, such as derricks etc. Insulators should be of the best type having low leakage even when wet.

3.6. Changing the Input Impedance

The input impedance of the four bands in the PRESELECTOR RANGES 0.06-0.18 MHz, 0.18-0.53 MHz, 0.53-1.6 MHz and 1.6-4 MHz can be altered, if so desired from a high level to a low level (50 ohm).

Band	High Impedance	Low Impedance (50 ohm)
0.06-0.18 MHz	Terminals 216-25 and 216-24 connected	Terminals 216-25 and 216-23 connected
0.18-0.53 MHz	Terminals 216-16, 216-17 and 216-18 connected	Terminals 216-16 and 216-15 connected
0.53-1.6 MHz	Terminals 216-11, 216-12, 216-13 and 216-14 connected	Terminals 216-12 and 216-10 connected
1.6-4 MHz	Terminals 216-21, 216-19 and 216-20 connected	Terminals 216-21, 216-19 and 216-22 connected

3.7. Remote Speaker

A remote speaker may be connected to the terminals at the back of the cabinet. It should have 4 ohms impedance or higher and a power handling capacity of 5W or more.

3.8. Muting

Muting terminals are available at the back of the cabinet. The terminals must be connected together in order to mute the receiver.

3.9. Replacement of Power Packs

Three different power packs are available for operation, of the receiver. Either power pack can be installed in the bottom of the receiver cabinet.

The P5010 is used for 24V battery operation while the P5011 is used for AC-mains operation. The P5012 is a combined version which can operate from both 24V battery and AC-mains. Replacing a power pack involves no modifications of the receiver.

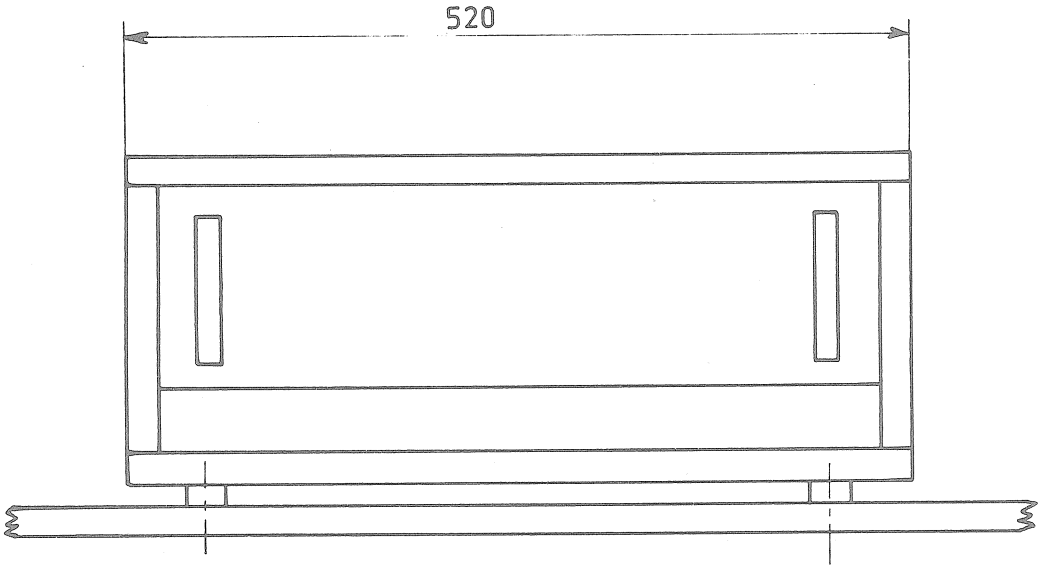

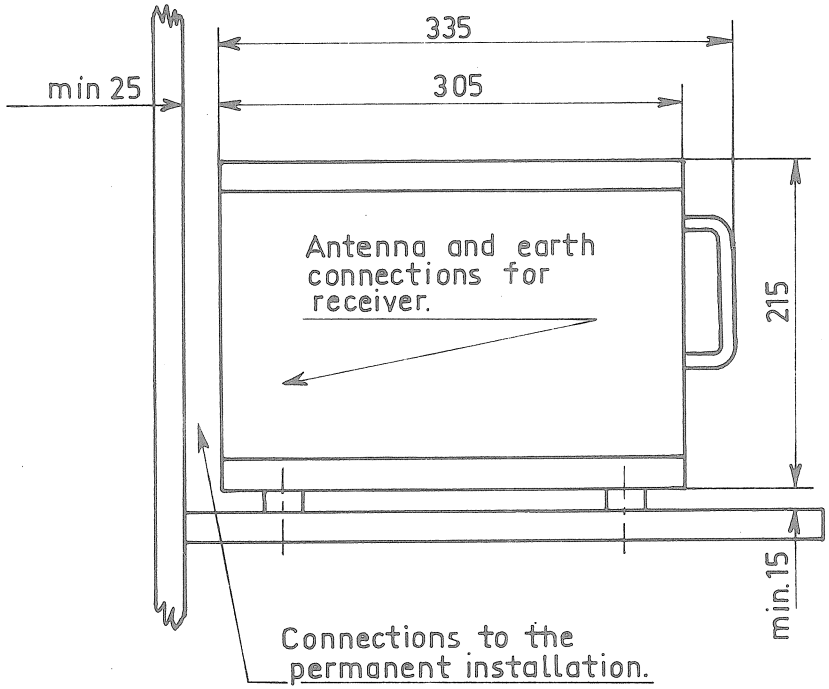

Horisontal drilling plan for mounting

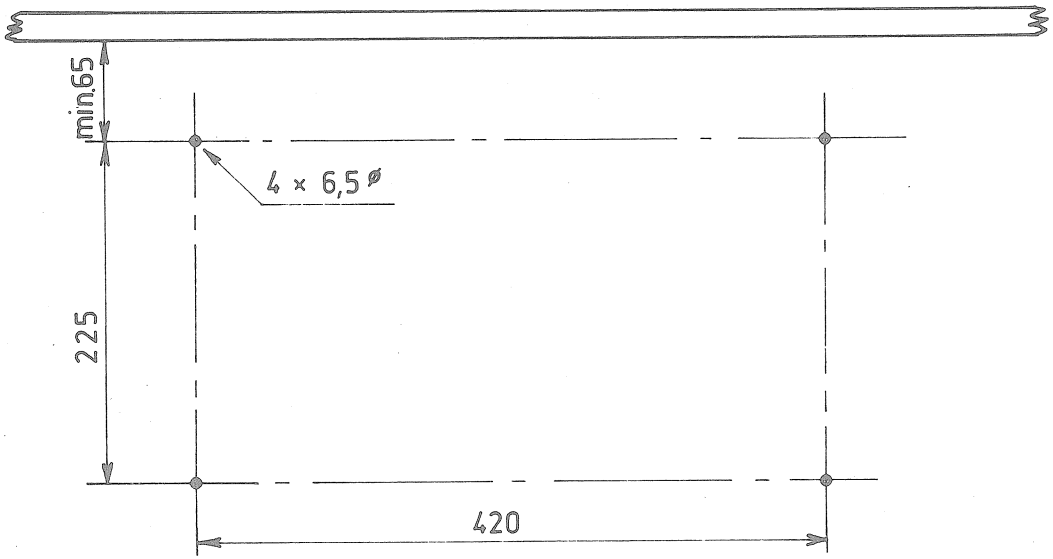

Unit :	Appr. Weight :
R5000,1,2 DC	23,3 kg
R5000,1,2 AC	24,3 kg
R5000,1,2 AC/DC	25,3 kg

Dimensions are in mm
Tolerances : ±1 mm

MOUNTING OF R5000,1,2

4. Technical Data

4.1. Reciever R5001

Frequency Range:

Synthesized operation from 10 kHz to 29.9999 MHz

Frequency Presentation:

Fully digital read-out.

Modes of Operation:

A1, A2, A2H, A3, A3H, A3J and F1. Simplex, semiduplex and duplex with built-in duplex filters.

Selectivity: 217

Wide:	216	6 dB at +/− 4 kHz, 60 dB at +/− 17.5 kHz
	202	6 dB at +/− 2.7 kHz, 60 dB at +/− 10 kHz
Intermediate:		6 dB at +/− 1.2 kHz, 60 dB at +/−1.9 kHz
Narrow:		6 dB at +/− 0.5 kHz, 60 dB at +/− 3.5 kHz
Very narrow:		6 dB at +/− 0.1 kHz, 60 dB at +/− 2 kHz
SSB:		6 dB at 350 and 2700 Hz
SSB:		60 dB at −400 and +3400 Hz
F1 (optional)		6dB at +/− 400 Hz, 60 dB at +/− 850Hz

Selectivity: 218

Wide:	216	6 dB at +/− 4 kHz, 60 dB at +/− 17.5 kHz
Intermediate:		6 dB at +/− 2.7 kHz, 60 dB at +/− 10 kHz
Narrow:		6 dB at +/− 0.5 kHz, 60 dB at +/− 3.5 kHz
Very narrow:		6 dB at +/− 0.1 kHz, 60 dB at +/− 2.0 kHz
SSB:		6 dB at 350 and 2700 Hz
SSB:		60 dB at − 400 and + 3400 Hz

Sensitivity:

Connection made for high input impedance

		Max input for 10 dB SINAD
0.1-1.6 MHz	A1	4μV
	A2, A2H, A3	18μV
1.6-4 MHz	A1, A3A, A3J, F1	1μV
	A2, A2H, A3, A3H	4μV

Connection made for low input impedance (50 ohm)

0.1-1.6 MHz	A1	2μV
	A2, A2H, A3	9μV
1.6-4 MHz	A1, A3A, A3J, F1	0.5μV
	A2, A2H, A3, A3H	2.5μV
4-30 MHz	A1, A3A, A3J, F1	0.5μV
	A2, A2H, A3, A3H	2.5μV

Audio-Output:

10 mW to phones (400 0hms)
5 W to loudstpeaker(s) (4 ohms)
10 dBm to line (600 ohms)

Supply Voltage:

24V battery with P 5010 Power Pack
110/115/120 or 220/230/240V single – or two phase AC 50-60 Hz with P 5011 Power Pack
24V battery and/or 110/115/120 or 220/230/240 single – or two phase AC 50-60 Hz with P 5012 Power Pack

Supply Voltage Variations:

DC: – 10 to +30%
AC: + 10%

Consumption:

24V battery:	approx. 2A
AC mains:	approx. 45 VA

The duplex filters bandwidth:

»4 MHz«	– 1 dB at 4355 kHz and 4445 kHz
»6 MHz«	– 1 dB at 6500 kHz and 6596 kHz
»8 MHz«	– 1 dB at 8710 kHz and 8840 kHz
»12 MHz«	– 1 dB at 13100 kHz and 13350 kHz
»16 MHz«	– 1 dB at 17230kHz and 17830 kHz
»22 MHz«	– 1 dB at 22570 kHz and 23430 kHz
»25 MHz«	– 1 dB at 25300 kHz and 26300 kHz

Dimensions:

Height:	245 mm
Width:	520 mm
Depth:	306 mm
Weight:	23.6 kg

5. Technical Description

5.1. Mechanical

The receiver is built on a rugged zinc plated and passivated iron chassis.

The receiver contains 12 printed circuits boards. Six of these, /220\, /207\, /208\, /209\, /210\ and /212\ are plug-in boards, which are placed in a special screened box at the right hand side of the receiver chassis and contains the circuits for the AF-amplifier and the synthesizer. The rest of the circuit boards except /213\ and /214\ are housed in four screening cans. The can at the left hand side of the top compartmant contains the 2nd mixer /203\ and the IF-Amplifier /205\ while the can in the middle contains the IF-filters /217\ or /218\ . In the bottom compartment, the screening can contains the Input Filters and 1st Mixer, /202\ or /216\. Finally, in the front compartment behind the front panel, switchers and potentiometers are located together with the Filter Board, /213\ the Loop 3-Divider /214\ and the circuit for the Display and Keyboard, /211\. The front panel is electrically insulated from the chassis. This feature permits connecting the chassis to a separate earth when the receiver is mounted in the same rack with a transmitter.

5.2. Circuit Discription, General

Each of the printed circuit boards and also the chassis mounted components in this equipment have been allocated an identification number between /201\ and /220\. The disignation of a component or terminal includes this number as a prefix, e.g. 204R3 (resistor R3 on board /204\ ) or 204-3 (terminal No. 3 on board /204\ ).

For convenience in this section and on the circuit diagrams the prefix is omitted except where there is a risk of ambiguity.

The circuit diagram is divided into a wiring diagram on page 8-59 showing interconnections between the printed circuit boards, and circuit diagrams of the individual printed circuit boards. The mode of operation follows the block diagrams on pages 8-50, 8-51 and 8-52 showing the signal path, the frequency synthesizer and the frequency selection, respectively.

5.3. Circuit Summary, Signal Path

The incoming signal is fed via the BAND switch on board /202\ or /216\ to the RF Input Filters The board also contains the 1st mixer stage, that converts the input signal frequency to the 1st intermediate-frequency 38 MHz by mixing it with a signal from the Frequency Synthesizer. Before leaving the board , the intermediate-frequency signal passes a crystal filter which determines the double-sideband selectivity of the receiver.

The 1st intermediate-frequency signal is fed to the 2nd mixer on board /203\, where it is converted to the 2nd intermediate frequency, 1.4 MHz, by mixing it with a signal derived on the basis of the 11.2 MHz TCXO on board /220\ and the 3 MHz the clarifier-oscillator on board /203\.

The 2nd intermediate-frequency signal is fed to the IF-filters on board /217\ or /218\. The selection of the disired filter is carried out by the BANDWIDTH switch.

On the IF-Amplifier board /205\ the signal is amplified and detected and the audio frequency output is fed to the VOLUME control via an active low-pass filter.

The audio-frequency signal is amplified on plug-in board /220\, which also contains the line-amplifier and the TCXO.

5.4. Circuit Description, Signal Path Boards

5.4.1. /202\ or /216\ Input Filters

The PRESELECTOR RANGES consist of six bands, each tuned with the variable capacitor C5. The 3 bands from 0.06 MHz to 1.6 MHz consist of the coils T11, T12, and T 13 and associated components. The 3 bands from 1.6 MHz to 30 MHz consist of six coils which two by two, together with the remaining components, constitute a double band-pass filter. The 2 bands, .18-.53 MHz and 1.6 MHz-4 MHz are, in the positions 500 kHz and 2182 kHz fixed tuned with capacitors C3 and C1, C2, C4, C6 respectively. In the DUPLEX ranges all circuits are fixed tuned. The seven DUPLEX filters comprise three tuned circuits, and their selectivity is high to provide effective attenuation of ones own transmitter. Alle the filters in the PRE-SELECTOR and the DUPLEX range have a balanced output for the mixer.

For the 0.01-1.6 MHz range there is a low pass filter consisting of L4 and C46.

Switching of the filter outputs is performed by a DC voltage which controls the diode switches at the balanced filter outputs.

The 1st mixer, which is double balanced, consists of the matched field effect transistors TR1, TR2, TR3 and TR4. The 38 MHz output is fed to the 2nd mixer via a 38 MHz crystal filter.

5.4.2. /203\ 2nd Mixer

This board contains the 2nd mixer, the clarifier oscillator and mixer and finally a 38 MHz input attenuator.

The 2nd mixer consists of field effect transistors TR-5 and TR7. The 1.4 MHz output is connected to the IF-Filter board /217\ or /218\. The injection signal for the 2nd mixer is obtained by mixing a 33.6 MHz and a 3 MHz signal in the integrated circuit IC1. The 33.6 MHz signal is derived from the TCXO on board /220\, while the 3 MHz signal is obtained by using part of IC1 as a crystal-oscillator. The frequency of the 3 MHz oscillator can by varied from the CLARIFIER control by means of the variable capacitance diode D1. The 36.6 MHz output from IC1 is filtered and amplified in TR4 before being applied to the 2nd mixer. The 38 MHz input attenuator consists of the PIN-diode D 2 and associated components. The current in the PIN-diode is controlled by TR6, the base of which is connected to the AGC-voltage on board /205\. The 38 MHz input frequency is stepped up in a transformer before being applied to the mixer input.

5.4.3. 217 or 218 IF-Filters

The IF-Filters consist of three 1.4 MHz crystal filters and a 1.4 MHz WIDE filter consisting of the coils L1 and L2 and the capacitors C2, C9 and C11. The selection of the correct filter is made by the BANDWIDTH switch which controls the diode switches at the filter input and output.

When the BAND Switch is in position 500 kHz or 2182 kHz the 1.4 MHz WIDE filter is automatically selected.

5.4.4. 205 IF-Amplifier, Detector and AGC

The IF-amplifier consists of transistors TR1 and TR2. A 1.4 MHz band-pass filter connects the amplifier to the signal detector IC1. This integrated circuit contains a balanced mixer and a high-gain limiting amplifier. The signal voltage is applied balanced to the one input port of the mixer, terminals 7 and 9, of the integrated circuit.

When the detector works as an AM detector the signal voltage is also fed to the amplifier input terminal 14, via D 12. This signal is amplified and clipped to constant amplitude and internally connected to the other input port of the balanced mixer where it is mixed with the modulated signal. The difference frequency, which contains the wanted AF-signal, is taken off at the mixer output, terminal 8. The AF-signal is then fed to an active low-pass filter consisting of transistor TR5 and associated components.

In the A1/F1 mode and the A3J/A3A mode D 12 is blocked while D 11 is conducting and the 1.4 MHz signal from the AF-amplifier, board 220 is now fed to the amplifier input. The mixer is working in the same manner as before except that now the 1.4 MHz signal is the re-inserted carrier.

Also the sum frequency of the input signals is present at the mixer output. This signal is used for automatic gain control and is taken off across the 2.8 MHz tuned circuit. It is amplified in TR4 and rectified in the AGC detector TR3. The current of TR3 increases for increasing signal level causing the collector voltage to drop. The collector is connected to the bases of the IF-transistors and a lower collector voltage means reduced gain in the IF-Amplifier.

The AGC time constants are determined by C2 and C8. The circuit combines a short attack time and a long decay time. The resistor R11 in series with C8, which mainly determines the decay time, prevents short noise pulses from giving a long decay time.

The gain can also be controlled manually by means of the SENSITIVITY control, which in combination with the diode D 1 determines the maximum collector voltage of TR3 and with that the highest available gain of the IF-amplifier.

The AGC switch switches off the AGC by disconnecting the emitter current of TR4. The base voltage of the IF transistors is then controlled only by means of the SENSITIVITY control.

5.4.5. 220 AF-Amplifier

The board contains the AF amplifier, the line amplifier, the BFO and the TCXO. The AF amplifier is an integrated circuit provided with a built-in thermal limiting circuit and protection against accidental hort circuit of the output. The line amplifier consists of the transistors TR1 and TR3. The BFO signal is obtained by using part of IC1 as a crystal oscillator. The frequency of the 12.6 MHz oscillator can be varied from the BFO control by means of the variable capacitance diode D3. The 12.6 MHz signal and the 11.2 MHz TCXO signal are then mixed in the integrated circuit IC1 to obtain a 1.4 MHz signal for the detector on the board 205. The TXCO frequency 11.2 MHz is amplified in TR2 and TR6 and clipped in TR10 The signal is then dividede by 8 to 1.4 MHz in the integrated circuit IC3. From the output of the divider a 1.4 MHz signal is fed to an BNC connector on the FILTER BOARD, /213\, for connection to a SKANTI type E5000 exciter. Another 1.4 MHz signal from the divider is fed to the Mother Board /201\.

The TCXO frequency is amplified in TR5, TR7 and TR8, and the third harmonic is taken off in the filter consisting of coils T2, T3 and associated components. The 33.6 MHz signal is fed to the 2nd MIXER on board /203\.

5.4.6. 213 Filterboard

The Filterboard contains 3 voltage regulators. IC1, IC2 and IC3. IC1 supplies 12 V to the synthesizer, while IC2 supplies 12 V to the other parts of the receiver. IC3 supplies 5V to the AF-AMPLIFIER and the synthesizer.

RF filters are inserted in the power supply, muting and AF-output lines in order to suppress noise and interference on these lines.

5.5. Circuit Summary, Frequency Synthesizer

This Frequency synthesizer consists of two programmable phase locked loops (Loop 1 and Loop 2), the outputs of which are controlling a third (Loop 3) from which the complete synthesized signal is derived and fed to the 1st mixer in the signal path.

The output frequency of Loop 1 is controlled by the 100 Hz, 1 kHz, and 10 kHz information according to the contents of the displays, provided that the receiving mode chosen is not F1 . If the F1 -mode is chosen the output frequency is decreased by 30 kHz, which means that the final output frequency of the Synthesizer is decreased by 1.5 kHz.

Loop 1 produces an output frequency in 999 steps from 20.000 MHz to 21998 MHz in all modes but F1 . In the F1 mode it is from 19.970 MHz to 21.960 MHz. This frequency is divided by 200 and serves as a variable reference frequency for the Loop Translator.

Independent of the different receiving modes Loop 2 is controlled by the 100 kHz, 1 MHz, and 10 MHz information according to the contents of the displays. The output frequency of this loop is variable from 3.70 MHz to 6.69 MHz in 299 steps and is fed to the mixer of the Loop Translator, where it is subtracted from the Synthesizer output frequency divided by 10, and finally compared with the variable reference frequency to this loop by means of Phase/Freq. Detector 3. A Frequency Comparator ensures that the Synthesizer output frequency divided by ten is higher than the output frequency of Loop 2. If this was not the case it would lead to a stable, unlocked condition of Loop 3.

The Frequency Synthesizer is locked to a 1.4 MHz signal derived from the TCXO, so that the output frequency will exhibit exactly the same stability as specified for the TCXO.

Provided that the 3 loops are locked the following equations, where fvcoi is short for output frequency of VCOi, will become valid:

Assumption: Receiving frequency is (ab,cde.f)kHz.

$(fvco_3 \div 10) - fvco_2 \div (fvco_1 \div 200)$.

$fvco_3 = 10x(fvco_2 + (fvco_1 \div 200))$

where

$fvco_1 = (20000 + (d\ e\ f)\ x2)$ kHz and

$fvco_2 = (3700 + (a\ b\ c)x10)$ kHz and

$fvco_3 = 38000.0$ kHz + a b c d e. f kHz

5.6. Circuit Description, Frequency Synthesizer

5.6.1. 207 Frequency Dividers

There are three divider chains, their associated buffer amplifiers, and two phase/freq. detectors are located on this board.

The Reference Divider produces the 2 kHz reference frequency for the Phase/freq. Detector 1, and the 10 kHz reference signal for the Phase/Freq. Detector 2, from a 1.4 MHz signal derived from the TCXO on board 220.

The variable divider chains are composed of programmable up-counters and their associated external gating logic. The dividing action is accomplished by presetting (programming) these counters with the data blocks corresponding to the contents in the displays, at the end of each counting cycle. The data blocks contain the BCD 9's complement code of the corresponding digit.

In the Loop 1-Divider chain the F1 information is used to control the associated external gating logic. In the F1 mode this chain counts 15 clockpulses less than in any other mode, before concluding a counting cycle, thus the contents of the data blocks are independent of the mode.

The Loop 2-Divider chain counts independent of the receiving mode and adds, by means of the external gating logic, 370 extra clock cycles to what is determined by the three most important digits, before concluding a counting cycle.

The outputs from the variable dividers are led to their respective phase/freq. detectors and are here compared to the fixed reference frequency. In case of a frequency difference the detector will produce a DC error voltage which will adjust the associated VCO to establish the wanted frequency equality.

5.6.2. 208 Loop Translator

This circuit board contains one half of Loop 3, namely the Frequency Comparator, the 200 divider, the Loop 3 Mixer, with its associated 1.5 MHz Low-Pass Filter, and Phase/Freq. Detector 3.

The VCO_1 output frequency is divided by 200 and fed, as a variable reference frequency, to one of the two input ports of Phase/Freq. Detector 3. The output frequency of VCO_3 divided by 10 is fed to the Loop Mixer, whose other injection signal is derived from VCO_2. The sum frequency from this mixing process is removed in a 9-order 1.5 MHz Low Pass Filter, thus only allowing the difference frequency to pass on via the following Buffer Amplifier, to the other port of Phase/Freq. Detector 3. This detector is almost identical to the detectors mentioned in the description of board 207.

If the VCO_2 output frequency is higher than the Synthesizer output frequency divided by 10 at the beginning of an acquisition of Loop 3, this loop will end in a stable, unlocked condition. To avoid this these two frequencies are compared. If the frequency of VCO_2 is higher then the monostable multivibrator IC 13 is triggered by the latch following the two divider chains and via the Phase/Freq. Detector 3, the frequency of VCO_3 is forced to rise, thus pulling Loop 3 out of this unwanted condition.

The output pulse from the detector is smoothed by means of a simple RC-filter before leaving this circuit board.

5.6.3. 209 VCO_1 and VCO_2

The Loop Filter and Voltage Controlled Oscillator of both Loop 1 and Loop 2 are located on this board.

Both of these filters are active 3rd order low pass types with an integrated function incorporated. The purpose of the loop filters is to remove the pulses from the output of the Phase/Freq. Detector and allow only the DC-Information to pass on to the vari-cap diodes og the Voltage Controlled Oscillators. By use of the Phase Error Adjustment potentiometer the phase error pulse width can be minimized. Once adjusted this width will remain unchanged throughout the whole frequency range of the VCO, due to the use of an integrator in the Loop Filter. Both of the VCO's are amplitude regulated.

The selection of one of the three bands, in which VCO_2 is operating, is carried out by means of a decoding circuit on 212.

5.6.4. 210 VCO_3

This circuit board contains the Loop 3-filter, the Voltage Controlled Oscillator VCO_3, and the Loop 3-Divider (÷ 10).

The Loop 3-filter consists of a 1st order low pass filter and an integrator. The filter serves to remove the pulses of the Phase/Freq. Detector output signal and allow only the DC-information to pass on to the vari-cap diodes of VCO_3. By use of the Phase Error Adjustment the phase error pulse width can be minimized, and once adjusted it will remain unchanged throughout the whole frequency range of VCO_3 due to the use of an integrator in the Loop Filter.

VCO_3 consists of three Voltage Controlled Oscillators VCO_{3x}, VCO_{3y} and VCO_{3z}, each covering a band of approximately 10 MHz. The band selection is carried out by means of a decoding circuit on /212\.

The VCO_3 output signal is amplitude regulated and serves as an injection signal to the 1st mixer in the receiver signal path.

5.6.5 /214\ Loop 3-Divider

The Loop 3-Divider divides the frequency of VCO_3 by 10; this signal is then fed to the Loop Translator.

5.7. Circuit Summary, Frequency Selection

The frequency selection is performed by the two printed circuit boards /211\ and /212\.

The purpose of this unit is to control the selection of the receiving frequency, display it and control the Synthesizer output frequency in accordance with this setting.

The frequency setting can be done in the following ways.

From the Keyboard any number (the receiving frequency) less than 30.000.0 can be keyed into the displays. This number can be changed in steps of 1 kHz in the A3/A3H-mode or 100 Hz in any other mode by means of the Tuning Wheel provided that the LOCK-Key is not activated. If the LOCK-key is activated, the Tuning Wheel will be inoperative while the Keyboard will remain operative. When the Band switch is moved to the 500 kHz or 2182 kHz positions these frequency settings will override the present setting, which is saved and will appear again when the Band switch is moved to any other position.

It is not possible to choose a number greater than 29,999.9; if such an attempt is made, the displays are automatically cleared and ready to accept a new frequency setting.

For any frequency setting less than 10.0 kHz the receiver is muted.

To display the receiving frequency a multiplexing system is used. All the digit datas used to control the Synthesizer are present on a parallel form and in the code of BCD 9's complement right after the 500 kHz and 2182 kHz Preselection Circuits. In order to display the receiving frequency the Scan Counter selects via the Multiplexer unit, one of these digit dat blocks at a time, converts it to BCD code and decodes it further to 7 segment information. This information controls a 7 segment Driver, which starts driving the appropriate digit-display, selected by the Scan Decoder. So, in fact, only one display is derived at a time but the repetition rate is so high that no flickering appears.

The Dimmer Control potentiometer is used to regulate the period of time in which the respective display is activated, thus controlling the light intensity of the displays. The light intensity of the meter is regulated simultaneously in the same manner.

The most significant digit is decoded to select the correct band of the VCO's of the Frequency Synthesizer.

5.8. Circuit Description, Frequency Selection.

5.8.1. 211 Display and Keyboard

When a key (except for the LOCK-key) is depressed the associated key-number is partly encoded in IC1 and passed on to an additional encoder located on 212 to complete the BCD 9's Complement encoding. Furthermore IC1 serves as an N-key lock-out unit, i.e. if one or more keys have already been depressed, it is not possible to activate the Keyboard before all depressed keys are reelased. If two or more keys are depressed simultaneously the lowest key-number is chosen.

The Tuning Control consists of a Tuning Wheel, two optically coupled modules, and an UP/DOWN-Control. The Tuning Wheel is a thin metal disk in which holes are etched. The two optically coupled modules sense these holes, and produce a pulse for each hole encountered. Each pulse counts up or down the displayed number, provided that the LOCK-key is not activated. The direction of this counting is controlled by IC10

By means of the two potentiometers R26 and R27 it is possible to adjust the duty cycles of the output from the two Smith-triggers (IC9) to 50%. When the wheel is rotated the outputs will exhibit a phase difference of 90° if the optically coupled modules are correctly mounted. This is necessary to ensure proper functioning of the UP/DOWN-Control.

The heart of the multiplex system is the combined Clock Generator and Dimmer Control consisting of IC4 together with external components, of which the potentiometer regulates the duty cycle of the clock.

This Clock Generator drives the Scan Counter which again produces the Scan Address. This address decides which digit the multiplex system is to operate on. The Scan Decoder selects via a driver transistor, the appropriate digit l.e.d. display.

The multiplexed BCD-input from 212 after being decoded into the 7-segment code in IC15 decides which figure is to be shown in the display.

Two other signals from 212 control IC15. One signal derived from the multiplex clock, is fed to the RBo terminal. Due to the variable duty cycle of the multiplex clock, it is possible to control within a clock cycle the ratio between how long the outputs of IC15 are enabled and disabled, thus controlling the light intensity of the display. The other signal is a blanking control signal, which is led to the RB1 terminal, completely blanking the displays that would otherwise show irrelevant zeros.

Because of the high peak currents driving the displays, the segment driving is performed by a special high current array, IC14.

The displays show the frequency in kHz and the decimal point is the only light source, which is not dimmable.

The AGC-voltage from board /205\ is shown on the meter; the light intensity of the associated bulb is controlled by the Dimmer Control in the same way as the displays.

5.8.2. /212\ Synthesizer Control

When a key is depressed or released there will always be some sort of bouncing effect before the key has settled. This bouncing is removed by means of the Key Bounce Eliminator consisting of IC4 and additional external gates. A load-command for the Digit Register Stack consisting of six programmable up/down-counters is generated as long as a key (except for the LOCK-key) is depressed. A clock pulse is produced when the key has settled after being activated, and the the data corresponding to the key number is loaded into IC10 and simultaneously all the data present in the Digit Register Stack is shifted to the next counter.

The encoding of the key-number is completed on this board before entering the Digit Register Stack.

To clear this stack the last half of IC4 is triggered by means of the multiplex clock and, simultaneously data corresponding to key-number »O« is produced. So for each clock cycle these datas are read into the Data Register Stack.

When the Tuning Wheel is rotated a pulse is generated in the Pulse Shaper each time a hole passes the optically coupled modules on /211\ . This pulse activates the last half of the Key Bounce Eliminator which produces a counting pulse for the Digit Register Stack, thus incrementing or decrementing on /211\ . If the LOCK-key is activated, the counters IC10 and IC11 will become disabled thus making it impossible to tune the receiver in the way mentioned above, but the Keyboard will remain operative.

By means of the A3, A2 -mode information, it is decided which of the first two counters of the Digit Register Stack is to be activated by the counting pulse, thus deciding whether to tune in steps of 100 Hz or 1kHz.

The outputs of the Data Register Stack are led through the 500 kHz and 2182 kHz Preselection circuits, IC16-IC21. If neither of these two Band-settings is chosen the data passes through these gates. Otherwise one of the two preselected frequency number is chosen independent of the content of the Digit Register Stack.

By means of IC29 it is tested every 8th cycle of the multiplex clock, whether the most significant digit is greater than 2 or not, if it is, then a Clear command identical to that produced by means of the Clear-key is generated through the subsequent 8th clock cycle.

The data now containing the information of the receiving frequency in BCD 9's complement is then used for two purposes. First to control the Frequency Synthesizer and second to feed the displays.

The four multiplexers select one digit data block, controlled by the Scan Address, and pass it on through a BCD 9's Complement Converter before it enters /211\ in order to become displayed there.

In order to establish a so-called leading edge zero suppression of the displayed frequency, the latch consisting of two gates from IC7 controls the blanking input of RB_1 of the BDC 7 segment decoder on /211\ . This latch is reset by clock pulse number six and seven whereby the blanking input is activated. Through the four inverters of IC31 the latch senses the first zero to come, beginning with the most significant digit. The first digit different from zero sets the latch, thus cancelling the blanking command. If all the digits are equal to zero, a puls from /211\ sets the latch on clock pulse number five, so that the least significant digit is always displayed.

In order to mute the receiver, if the receiving frequency setting is less than 10 kHz, the output from the latch mentioned above is sampled on the third clock pulse, this deciding whether the four most significant digits are all different from zero or not. If they all are equal to zero a mute command is produced.

The most significant digit is decoded in order to control the band selection of the VCO's of the Frequency Synthesizer.

5.9. Circuit Symmary, P5010, 24VDC Power Pack.

5.9.1. The complete circuit diagram is shown on page 8-91. The block diagram on page 8-55 illustrates the operation of the power pack.

5.9.2. The necessary supply voltages for the receiver are generated in a converter. The converter transformer gives full isolation between the battery voltage and chassis permitting these to be earthed without causing the supply leads to be earthed.

5.9.3. The output voltages from the converter transformer are rectified in two sets of rectifiers, each followed by a voltage stabilizer.

The converter frequency is determined by and RC-coupled oscillator, followed by a bistable multivibrator.

5.10. Circuit Description, P5010, 24VDC Power Pack

5.10.1. /280\ Converter

The total input current is passed through fuse FS1 to POWER switch S1. An RFI-filter on board /281\ is followed by zener diode D1.

Diode D1 protects the power pack against transients on the supply leads and against the consequences of polarity reversal.

The converter is composed of transistors TR1 and TR2 and the square wave output signal is coupled through transformer T1 to two sets of rectifiers.

5.10.2. 281 Converter Driver, Rectifiers and Stabilizers

A bistable multivibrator composed of transistors TR2 and TR3 is driven from oscillator TR1 with the nominal frequency 400 Hz. The output signals from the multivibrator are therefore square waves with a repetition frequency of 200 Hz, and these signals having a phase difference of 180° are used as driving signals for the converter.

One output signal from transformer 280T1 is fed to a double rectifier followed by a voltage stabilizer having a nominal output voltage of 15.7V, while a second output signal after rectification, also in a double rectifier, is fed to a voltage stabilizer having a nominal output voltage of 7.5 V.

5.11. Circuit Summary, P 5011, AC Power Pack

5.11.1. The complete circuit diagram is shown on page 8-93. The block diagram on page 8-56 illustrates the operation of the power pack.

5.11.2. The necessary supply voltages for the receiver are obtained from two secondary windings on the mains transformer.

5.11.3. The output voltages from the transformer are rectified in two sets of rectifiers, each followed by a voltage stabilizer.

5.12. Circuit Description, P5011, AC Power Pack

5.12.1. 283 Transformer

A double pole mechanically operated safety switch is inserted in the mains input leads. The primary current of transformer T1 is controlled by the front panel mounted POWER-switch.

5.12.2. 284 Rectifiers and Stabilizers

One output voltage from transformer 283T1 is fed to a double rectifier followed by a voltage stabilizer having a nominal output voltage of 15.7V while a second output voltage after rectification, also in a double rectifier, is fed to a voltage stabilizer having a nominal output voltage of 7.5V.

5.13. Circuit Summary, P5012, 24VDC/AC Power Pack

5.13.1. The complete circuit diagram is shown on page 8-95. The block diagram on page 8-57 illustrates the operation of the power pack.

5.13.2. The necessary supply voltages are obtained through either a mains transformer or a converter. The transformers give full isolation between mains voltage/ battery voltage and chassis, permitting the chassis to be earthed without causing the supply leads to be earthed.

5.13.3. A mains voltage sensor ensures that the receiver is supplied from the mains as long as a mains voltage is available. Should the mains voltage be interrupted the Power Pack will automatically switch over to 24V battery operation. When mains voltage is again available the Power Pack will automatically switch back to mains supply.

5.13.4. The output voltages from the mains and converter transformers are rectified in two sets of rectifiers, each followed by a voltage stabilizer.

5.14. Circuit Description, P5012, 24VDC/AC Power Pack

5.14.1. 286 Transformers and Coverter

A double pole mechanically operated safety switch is inserted in the AC mains input leads. The primary current of the mains transformer T1 is controlled by the front panel mounted POWER-switch.

The secondary windings of T1 are connected to two sets of rectifiers.

Input current from the battery input terminal is also controlled by the POWER-switch. An RFI-filter on board 287 is followed by Zener diode D1.

Diode D1 protects the converter against transients on the supply leads and against the consequences of polarity reversal of the battery supply leads. The converter is composed of transistors TR1 and TR2 and the square wave output signal is coupled through transformer T2 to two sets of rectifiers.

5.14.2. 287 Converter Driver, Rectifiers and Stabilizers

A bistable multivibrator composed of transistors TR1 and TR5 is driven from oscillator TR4 with the nominal frequency 400 Hz. The output signals from the multivibrator are therefore square waves with a repetition frequency of 200 Hz, and these signals having a phase difference of 180° are used as driving signals for the converter. One output signal from transformer 286T2 is fed to a double rectifier followed by a voltage stabilizer having a nominal voltage of 15.7V, while a second output signal after rectification also in a double rectifier is fed to a voltage stabilizer having a nominal output voltage of 7.5V.

A mains voltage sensor composed of transistors TR2, TR3 and TR6 controls, via RL2, the 24V converter.

6. Simple Service

6.1. Incorrect Operation

If the equipment is not functioning correctly, a check should be made that it is being operated properly. Go through adjustment procedures 2.2 to 2.4 if necessary.

6.2. Battery

The condition of the battery should be checked at frequent intervals. The battery must always be fully charged and should be topped up frequently with distilled water (liquid should rise 5 to 10 mm above the plates).

6.3. Replacement of Fuses

All fuses, are accessible on the front panel of the Power Pack.

7. REPAIR AND ALIGNMENT

7.1. Introduction

Repairs and adjustments on the equipment should be performed only by qualified technicians, to whom this chapter is addressed. Before attempting any repairs or adjustments, a study of Chapter 5, Technical Description, is recommended.

7.2. Cross-Slot Screws

The cross-slot screws used to secure the printed circuit boards are Pozidriv screws. A Pozidriv screwdriver No. 1 should be used in order to avoid damaging such screws.

7.3. Locating Subunits and Components

Locations of circuit boards in the equipment appear from the photographs on pages 8-48to 8-49. Locations of components on each circuit board appear on the component location drawings against the respective circuit diagrams.

7.4. Locating Faults

Fault finding, as described in section 7.5. below, is aided by test points provided for the purpose of permitting rapid localization of faulty circuit boards on the basis of DC measurements. Since not all types of faults can be traced by means of DC measurements, supplementary AC measurements with an oscilloscope may be required; see section 7.6. To facilitate fault finding on each individual circuit board, typical voltages are listed on the circuit diagrams.

7.5. Test Points

Several circuit boards contain one or more test points. They are small pin-type terminals, colour coded following the standard colour code in addition to being numbered. In the circuit diagrams, test points are marked TP 1 , TP 2 etc., and typical voltages at the test points are listed there.

The terminals of the circuit boards may to a great extent also be regarded as test points. Typical voltages are therefore also listed against relevant terminals on the circuit diagrams.

If a voltage measured at a test point differs markedly from the listed value it is a fairly certain indication that the circuit board in question is faulty, assuming that the voltages applied to the circuit board are the correct ones. This should likewise be checked.

7.6. AC Voltages

AC voltages listed on the circuit diagrams are typical voltages. Voltages specified are based on measurement with an oscilloscope having an input impedance of 10 Mohms in parallel with 7 pF, a sensitivity of the order of 50mV/div. and a frequency range of not less than DC-50 MHz.

7.7. DC Voltages

DC voltages listed on the circuit diagrams are based on measurement with a 25 kohm/volt multimeter. If a stated voltage is dependent on the setting of a control, this is also stated on the circuit diagrams.
Typical logic levels (LOW/HIGH) are indicated in brackets.

7.8. Typical Sensitivity Levels

Input voltages to be applied at the input to /203\ *2 nd mixer* and the input to /205\ *IF amplifier, detector and AGC* to obtain an AGC voltage of *2.3 V DC* measured at *terminal 205-17:*

Receiver control settings:

MODE switch on A3J. A3A-AGC ON
SENSITIVITY turned fully clockwise
Frequency higher than 10 KHz.

Input to	Generator output impedance	Generator Frequency	Generator Modulation	Typical input level
203-8	50 ohm	37999 kHz	0	10 dB/1uV
205-5	1 k ohm	1.399 kHz or 1.401 kHz	0	30 dB/1uV

7.9. Adjustments

The following sections describe alignment procedures for printed circuit boards that contain adjustable components. Bear in mind that no adjustment should be carried out unless there is a clear indication that it is really necessary. Moreover, adjustments should be carried out only by a qualified technician with the necessary equipment at his disposal.

When a unit or printed circuit board is replaced, adjustments are in some cases necessary. These cases are listed in the table below:

Replacement of unit board:	Adjustment required of:	Procedure given in section:
209	209-R13 209-R14	7.15.3. 7.15.4.
210	210-R5	7.17.2.

7.10. Realignment of Input Filters 202 or 216

Measuring Equipment:

Standard signal generator covering the range 0.1-30 MHz and having an output impedance of 50 ohm. Accuracy bettter than 10 kHz.
RF millivoltmeter having a sensitivity of 10 mV f.s.d. Input impedance better than 10 K ohm in parallel with 6 pF.

Connect signal generator to antenna input socket and set it to alignment frequency indicated in table below. Output voltage 100 mV.

7.10.1. Duplex Band

Receiver settings:

Band switch to the desired band.

1) Connect RF millivoltmeter probe to the input terminals 202-3 and 202-4 (216-3 and 216-4).
2) Detune second and third tuned circuits of filter to be aligned by turning core anti-clockwise.
3) Adjust first tuned circuit for maximum voltage as indicated by RF millivoltmeter. Adjust second circuit for minimum reading and third tuned circuit for maximum.

7.10.2. Preselector Bands. MF

Bandswitch to the desired band:
0.060-0.180 . 0.180-0.530 . 0.530-1,6 MHz

1) Connect RF millivoltmeter probe to test point 1.
2) Turn the preselector fully clockwise.
3) Adjust the signal generator.
4) Tune the coil to maximum.

7.10.3. Fixed Tuned Bands

Bandswitch to 500 KHz.

1) Connect RF millivoltmeter probe to test point 1.
2) Adjust the signal generator.
3) Adjust C3 to maximum.

7.10.4. Realignment of the Bands 1.6-4 MHz and 2182 KHz

Bandswitch to 2182 kHz

1) Adjust signal generator.
2) Connect RF millivoltmeter probe to the input terminals 202-3 and 202 -4 (216 -3 and 216 -4).
3) Detune the second tuned circuit in the band *1.6-4 MHz* by turning core anti-clockwise (T14).
4) Adjust first tuned circuit (T8) for maximum.
5) Adjust second circuit for minimum.
6) Bandswitch to *1.6-4 MHz.*
7) Turn preselector fully clockwise.
8) Adjust signal generator *(5000 kHz).*
9) Adjust C 49 for maximum.
10) Adjust C 76 for minimum.
11) Bandswitch on *2182 kHz.*
12) Adjust signal generator *(2182 kHz).*
13) Adjust C2 for maximum.
14) Adjust C1 for minimum.

7.10.5. Preselector Bands HF

Bandswitch to the desired band

4-12. 12-30 MHz.

1) Turn preselector fully anti-clockwise.
2) Connect RF millivoltmeter probe to the input terminals 202-3 and 202-4 (216 -3 and 216-4).
3) Detune second tuned circuit of filter to be aligned by turning core anti-clockwise.

4) Adjust signal generator.

5) Adjust first tuned circuit for maximum (T9 or T10).

6) Adjust second tuned circuit for minimum (T15 or T16).

7) Turn preselector fully clockwise.

8) Adjust signal generator.

9) Adjust C50 or C51 for max.

10) Adjust C 77 or C 78 for min.

7.10.6. Realignment of 1st mixer on circuit board 202 or 216

1) Connect signal generator to antenna input socket and adjust it to the frequency 37.999 kHz. Output voltage 10mV.

2) Set bandswitch to the band *12-30 MHz.*

3) Select the mode *A3J. A3A.*

4) Switch off the AGC.

5) Key-in the frequency 28.000.0 kHz.

6) Adjust 202-R25 (216-R25) for minimum whistling in the LF output.

7) Adjust the signal generator to 28.001.0 kHz. Output voltage 1 mV.

8) Adjust 202-T25 (216-T25) for maximum LF output.

Band	Alignment Frequencies	
4 6 8 12 16 22 25	4400 kHz 6550 kHz 8778 kHz 13226 kHz 17533 kHz 23000 kHz 26000 kHz	
0.06-0.18 0.18-0.53 0.53-1.6 500 2182	175 kHz 530 kHz 1750 kHz 500 kHz 2182 kHz	
4-12 12-30	(Capacity) 11.9 MHz 29 MHz	(coil) 4MHz 12 MHz

7.11. 203 Realignment of 2nd Mixer and Clarifier Oscillator

Measuring equipment:

Standard signal generator covering 1400 kHz. Output impedance 50 ohm.
Frequency counter having an accuracy better than 10^{-6}.
AF output meter.

1) Connect signal generator to antenna input and tune it to the frequency for which the receiver is set. Output level approx. 0.1 mV.
2) Switch AGC off and adjust SENSITIVITY to a convenient output level.

7.11.1. Realignment of 1.4 MHz Mixer, 38 MHz Filter and 36.6 MHz Filter

1) Adjust 203-T5, T3, T1 and T2 one by one for maximum AF output.

7.11.2. Realignment of the Clarifier Oscillator

1) Disconnect the wire to terminal 203-3.
2) Connect the counter to the test point TP 2.
3) Adjust the potentiometer R8 to the frequency 3000.000 Hz.
4) Replace the wire to terminal 203-3.

7.11.3. Realignment of Balancing Potentiometer R 36

1) Disconnect the coaxial cable to the terminal 203-8.
2) Connect the signal generator to the terminal 203-8.
3) Adjust the signal generator to the frequency 1399 kHz. Output level approx. 1 mV.
4) Select the mode *A3J.A3A – AGC-OFF* on the receiver.
5) Adjust the potentiometer R 36 for min. AF output.

7.12. 205 Realignment of IF Amplifier Detector and AGC

Measuring equipment:

Standard Signal generator covering 2182 kHz.

7.12.1. Realignment of 1.4 MHz IF Filter and 2.8 MHz AGC Filter

1) Connect signal generator to antenna input and tune it to 2182 kHz. Signal level approx. 20 dB/IuV.
2) Set the BANDSWITCH to 2182.
3) Adjust cores in 205 L1 and 205 T1 for maximum AF output.
4) Increase signal generator level to approx. 40 dB/IuV and adjust 205 L2 for minimum AF output.

7.13. 220 Realignment of AF Amplifier

Measuring Equipment:

Frequency counter, accuracy better than 10^{-7}.
RF millivoltmeter having a sensitivity of 10 mV f.s.d.
Input impedance better than 10 kohm in parallel with 6 pF.
Extension board 259.

7.13.1. Realignment of 1.4 MHz Coils

1) Connect the RF voltmeter between 220-10a and common.

2) Adjust the coil 220 T2 for maximum output (typically 90 mV).

3) Connect the RF voltmeter between 220-12C and 220-12a.

4) Adjust the coil 220T5 for maximum output (typically 350 mV unloaded.

7.13.2. Realignment of 33.6 MHz Filter

1) Connect the RF-voltmeter between 220-28c and 220-30c.

2) Adjust the coils 220 T3 and 220 T4 for maximum output (typically 53 mV).

7.14. 220 Frequency Adjustment of the TCXO

1) Connect the counter between 220-28c and 220-30c (11.2 MHz multiplied by 3).

2) At approx. 25°C the frequency must be within ±2 Hz of the nominal frequency 11,2 MHz ± the offset frequency (marked on the top of the metal case).

If the frequency is not within these limits, the value of the resistor R2 must be changed, generally with a lower value. A resistor can therefore be placed in parallel with R2.

7.15. 209 Realignment of VCO_1 and VCO_2

Measuring equipment:

Frequency Counter having an accuracy better than 10^{-3} and a sensitivity of at least 0.5 V.

Extension Board 259

7.15.1. Realignment of VCO1

1) Connect a shorting lead between terminal 209-32c and common.

2) Connect the frequency counter between 209-22c and common.

3) Adjust transformer 209T1 until the counter reads 23.0 MHz.

4) Remove the shorting lead referred to in (1).

7.15.2. Realignment of VCO_2

1) Connect shorting lead between terminal 209-2c and common.
2) Connect the frequency counter between 209-16c and common.
3) Select the (3.7-4.69)MHz VCO_2-band.
4) Adjust transformer 209T2 until the counter reads 5.0 MHz.
5) Select the (4.70-5.69) MHz VCO_2-band.
6) Adjust coil 209L6 until the counter reads 6.1 MHz.
7) Select the 5.70-6.69)MHz VCO_2-band.
8) Adjust coil 209L5 until the counter reads 7.1 MHz.
9) Remove the short circuit referred to in (1).

7.15.3. Realignment of Phase/Frequency Detector 1 error signal

1) Unsolder the yellow lead from terminal 205-1.
2) Select by means of the keyboard 1.0 kHz as the receiving frequency.
3) Select the SSB-mode.
4) Set the clarifier to »O«.
5) Adjust 209R13 for minimum tone level from the loudspeaker.
6) Re-solder the yellow lead to terminal 205-1.

7.15.4. Realignment of Phase/Frequency Detector 2 error signal

1) Unsolder the yellow lead from terminal 205-1.
2) Select by means of the keyboard 9.0 kHz as the receiving frequency.
3) Select the SSB-mode.
4) Set the CLARIFIER to »O«.
5) Adjust 209R14 for minimum tone level from the loudspeaker.
6) Resolder the yellow lead to terminal 205-1.

7.16. 208 Realignment of LOOP TRANSLATOR

Measuring Equipment:

Signal Generator covering the range 100 kHz to 10 MHz.

Oscilloscope or *RF Voltmeter* having an input impedance greater than 10 kohm and a sensitivity of at least 10 mV/Div.

Extension board 259 .

7.16.1. Realignment of 1.5 MHz LP-Filter

1) Remove p.c.b. /209\ and /210\ from their sockets.

2) Connect the signal generator to pin 12 of 208IC4 though a 0.1 pF capacitor and common.

3) Connect the oscilloscope probe tip to the collector of 208TR5 and the oscilloscope ground clip to common.

4) Adjust the signal generator to 20mV rms.

5) Sweep the signal generator from 60 kHz to 1.45 MHz; the voltage reading level on the oscilloscope must not change more than 1 dB. (Take care that the output level of the signal generator does not change during the sweep).

6) Readjust the signal generator until the signal level measured is decreased by 3dB related to the maximum signal level found under 5). The frequency should then be between 1.5 MHz and 1.9 MHz.

7) Readjust the signal generator until the signal level measured is decreased by 20 dB related to the maximum signal found under 5). The frequency should then be between 1.8 MHz and 1.9 MHz.

7.16.2. Realignment of Transformer 208 T1

1) Insert the p.c.b. /207\ into its socket.

2) Select by means of the Keyboard 29.900.0 MHz as the receiving frequency.

3) Connect the oscilloscope probe tip to pin 1 of 208IC4.

4) Adjust the transformer 208T1 until the signal measured is approximately 2Vpp.

7.17. /210\ Realignment of VCO_3

Measuring equipment:

Frequency Counter having an accuracy better than 10^{-3}, a sensitivity of at least 1 V and an upper frequency limit of at least 75 MHz.

Extension Board /259\ .

7.17.1. Realignment of VCO_3

1) Connect a shorting lead between terminal 210-6c and common.

2) Connect the frequency counter between 210-16c and common.

3) Select VCO_{3Z}

4) Adjust 210C24 until the counter reads 51.0 MHz.

5) Select VCO_{3Y}

6) Adjust 210C26 until the counter reads 61.3 MHz.

7) Select VCO_{3X}

8) Adjust 210C28 until the counter reads 71.3 MHz.

9) Remove the shorting lead referred to in (1).

7.17.2. Realignment of Phase/Frequency Detector 3 Error Signal

1) Select by means of the Keyboard 100.0 kHz as the receiving frequency.

2) Select the SSB-mode.

3) Adjust the CLARIFIER until an audible tone is heard from the loudspeaker.
Adjust 210 R5 for minimum tone level from the loudspeaker.

8. PART LIST AND CIRCUIT DIAGRAMS

8.1. Numbering

An identification number between /201\ and /220\ is assigned to each module. The designation of a component or terminal includes this number as a prefix – example: 203R3 (resistor R3 on module /203\ ), or 203-4 (terminal No. 4 on module /203\ ).

8.2. Switches

Switches with stops are shown in the extreme anticlockwise position. The BAND-switch is shown in the 500 kHz position.

Switch wafer No. 1. is the wafer nearest to the front panel, and the front side of a wafer is the side facing the front panel.

8.3. Terminals

Locations of terminals appear from the component location drawings. On the circuit diagrams, each terminal is identified by a number and in most cases by an explanatory text. In addition to this, the number of the module and terminal to which the lead is connected is indicated (example: /203\ -4). Where interconnections cosists of coaxial cables, only the number of the terminal is given to which the inner conductor of the cable is connected.

8.4. Voltages

Typical DC voltages are indicated on the circuit diagram next to the points to which they refer and are marked with a »*V*«.

Typical logic levels are indicated in a bracket (LOW/HIGH) on the circuit diagrams next to the point to which they refer.

Typical AC voltages are likewise indicated on the circuit diagrams. They are marked with »*Vpp*« or »*mVpp*«.

For measuring conditions see Chapter 7.

8.5. Test Points

Location of test points are shown on the component location drawings. Typical voltage at each test point is indicated on the circuit diagram.

8.6. Symbol Explanation

8.6.1. Logic circuits:

A small circle at an external input means that the specific input is active LOW, i.e. it produces the desired function, in conjunction with other inputs if its voltage is the lower of the two logic levels in the system, otherwise the specific input is HIGH.

A small circle at a clock input means that the output indicates that the outputs change on the HIGH to LOW clock transition.

A small circle at an output indicates that when the function designated is true, the output is LOW.

Inputs and outputs are labelled with mnemonic letters as described in the table 8.6.1.

8.6.2. Logic Functions:

Logic functions are labelled with mnemonic letters in a bracket. An active LOW function is given a bar over the label.

More logic functions may be connected by means of the principles of Boolean Algebra.

8.6.3. Arrows:

A black arrow on a line indicates in which direction an AC-signal flows.

A white arrow on a line indicates in which direction the information of a DC signal flows. An exception from this rule are the supply lines and their connections, which are always indicated by a supply voltage level or its associated label.

Positive supply line: Example

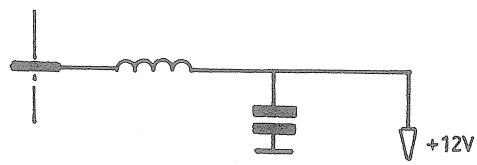

Negative supply line: Example

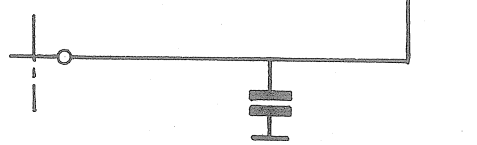

Connections to supply line: Example

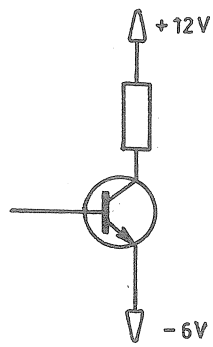

Label	Short for	Meaning
I_x	Input	Inputs to combinatorial circuits
J, K		Inputs to JK flip flops
D_x	Data	Inputs to D flip flops and latches
S, R	Set, Reset	Inputs to JK and D flip flops, latches, registers, and counters; R resets output to LOW; S sets output to HIGH
P_x		Inputs registers and counters
A_x	Addresses	Inputs used for selection of an input, output, data route, or memory location
E	enable	
PE	Parallel Enable	Control input used to synchronously load information in parallel into a circuit
MR	Master Reset	Input which resets asynchronously all outputs to LOW, overriding all other inputs
CL	Clear	Input which resets outputs to LOW, but does not override all other inputs
CP	Clock Pulse	
CE, CEP, CET	Count Enable	Control inputs to counters
0_x	Output	Outputs of combinatorial circuits
Q_x		Outputs of sequential circuits
TC	Terminal Count	(Output of a counter indicating 1111 for up binary counters, 1001 for up decimal counters, or 0000 for down counters).

Table 8.6.1.

8.7. Abbreviations

A	= ampere, amperes
C	= capacitor
Car.	= carbon
Cer.	= ceramic
D	= diode
F	= farad
FS	= fuse
H	= henry
IC	= integrated circuit
k	= kilo or 10^3
L	= inductor
LS	= loudspeaker
lin.	= linear
log.	= logarithmic
m	= milli or 10^{-3}
M	= mega or 10^6
ME	= instrument
MF	= metal film
Mi	= mica
MP	= metallized paper
μ	= micro or 10^{-6}
n	= nano or 10^{-9}
NPO	= temp. coefficient 0
N150	= temp. coefficient ÷150
NTC	= neg. temp coefficient
P	= pico or 10^{-12}
PL	= connector (plug)
Polyes.	= polyester
Polyst.	= polystyrene
PTC	= pos. temp. coefficient
R	= resistor
RL	= relay
S	= switch
SK	= connector (socket)
SL	= lamp
T	= transformer
Tan	= tantalum electrolytic capacitor
TR	= transistor
V	= working voltage DC or volts
V1...	= valve
Vac.	= working voltage AC
Var.	= variable
Vpp	= peak to peak voltage
Varicap	= variable capacitance diode
ww	= wire wound
W	= watt, watts
W.alum.	= wet aluminium electrolytic
X	= crystal, crystal osc. or crystal filter

PARTS LIST

FOR

215

215C 1	470 uF		16V	W.alum.	651 847 00
C 2-3	UHF π Filter			Cer.	779 000 02
215D 1	1S920				830 192 00
215PL1		One Way			751 000 01
215R 1	4.7 kohms	Lin			355 222 31
R 2	10 kohms	Lin			355 222 21
R 3	10 kohms	Lon			355 222 41
R 4	10 kohms	5%	1/3W	Car.	501 410 00
215S 1	Band				375 200 86
S 2	Bandwidth				375 202 03
S 3	Mode				375 201 84
S 4					762 000 11
S 5					762 000 10
215SK1					750 000 11

995 212 81

PARTS LIST

FOR

201

201C 1-5	0.1 uF	10%	250V	Polyes.	624 510 01
201SK1- 4		32 Way			751 000 21
SK5- 6		64 Way			751 000 23

995 212 63
995 212 82

995 213 01

PARTS LIST

FOR

202 216

202/216C 1-3	4.5-26 pF	Var.			683 126 00
C 4	220 pF	1%	500V	Polyst.	615 222 00
C 5	2x518 pF	Var.			686 251 81
C 6	220 pF	1%	500V	Polyst.	615 222 00
C 7	10 nF	-20+80%	32V	Cer.	602 410 00
C 8	0.68 uF	10%	100V	Polyes.	623 568 00
C 9	0.1 uF	10%	250V	Polyes.	624 510 00
C10	1 uF	10%	250V	Polyes.	624 610 00
C11	0.1 uF	10%	250V	Polyes.	624 510 00
C12	0.1 uF	10%	100V	Polyes.	623 510 00
C13-19	0.1 uF	10%	250V	Polyes.	624 510 00
C20	910 pF	1%	500V	Polyst.	615 291 00
C21	422 pF	1%	125V	Polyst.	613 242 20
C22	130 pF	5%	400V	Cer.	605 213 00
C23	100 pF	5%	400V	Cer.	605 210 00
C24	91 pF	5%	400V	Cer.	605 191 00
C25	0.1 uF	10%	100V	Polyes.	623 510 00
C26	4.7 pF	±0.25 pF	400V	Cer.	605 047 01
C27	3.9 pF	±0.25 pF	400V	Cer.	605 039 00
C28	5.6 pF	±0.25 pF	400V	Cer.	605 056 00
C29	0.1 uF	10%	100V	Polyes.	623 510 00
C30	910 pF	1%	500V	Polyst.	615 291 00
C31	0.1 uF	10%	100V	Polyes.	623 510 00
C32	422 pF	1%	125V	Polyst.	613 242 00
C33	180 pF	5%	400V	Cer.	605 218 01
C34	180 pF	5%	400V	Cer.	605 218 00
C35	3.9 pF	±0.25 pF	400V	Cer.	605 039 00
C36	3.3 pF	±0.25 pF	400V	Cer.	605 033 00
C37	6.8 pF	±0.25 pF	400V	Cer.	605 068 00
C38	68 pF	5%	400V	Cer.	605 168 00
C39	51 pF	5%	400V	Cer.	605 151 00
C40	39 pF	5%	400V	Cer.	605 139 00
C41	3.3 pF	±0.25 pF	400V	Cer.	605 033 00
C42	1.5 pF	±0.25 pF	400V	Cer.	605 015 00
C43-44	1.8 pF	±0.25 pF	400V	Cer.	605 018 00
C45	15 pF	5%	400V	Cer.	605 115 00
C46	100 pF	5%	400V	Cer.	605 210 00
C47	3.3 nF	1%	125V	Polyst.	613 333 00
C48	0.1 uF	10%	250V	Polyes.	624 510 00
C49-51	4.5-26 pF	Var.			683 126 00
C52	130 pF	5%	400V	Cer	605 213 00
C53	100 pF	5%	400V	Cer.	605 210 00

PARTS LIST

FOR

202 216

202/216C54	91 pF	5%	400V	Cer.	605 191 00
C55	1.8 pF	±0.25 pF	400V	Cer.	605 018 00
C56	47 nF	±10%	250V	Polyes.	624 447 00
C57	1.8 pF	±0.25 pF	400V	Cer.	605 018 00
C58	22 nF	±10%	250V	Polyes.	624 422 00
C59	4.7 pF	±0.25 pF	400V	Cer.	605 047 01
C60	180 pF	5%	400V	Cer.	605 218 00
C61	4.7 pF	±0.25 pF	400V	Cer.	605 047 01
C62	3.9 pF	±0.25 pF	400V	Cer.	605 039 00
C63	5.6 pF	±0.25	400V	Cer.	605 056 00
C64	68 pF	5%	400V	Cer.	605 168 00
C65	51 pF	5%	400V	Cer.	605 151 00
C66	39 pF	5%	400V	Cer.	605 139 00
C67	3.3 pF	±0.25 pF	400V	Cer.	605 033 00
C68	3.9 pF	±0.25 pF	400V	Cer.	605 039 00
C69	3.3 pF	±0.25 pF	400V	Cer.	605 033 00
C70	6.8 pF	±0.25 pF	400V	Cer.	605 068 00
C71	2.7 pF	±0.25 pF	400V	Cer.	605 027 00
C72-73	1.8 pF	±0.25 pF	400V	Cer.	605 018 00
C74	27 pF	5%	400V	Cer.	605 127 00
C75	15 pF	5%	400V	Cer.	605 115 00
C76-78	4.5-26 pF	Var.			683 126 00
C79	180 pF	5%	400V	Cer.	605 218 00
C80	130 pF	5%	400V	cer.	605 213 00
C81	100 pF	5%	400V	Cer.	605 210 00
C82	91 pF	5%	400V	Cer.	605 191 00
C83	68 pF	5%	400V	Cer.	605 168 00
C84	47 pF	5%	400V	Cer.	605 147 00
C85	33 pF	5%	400V	Cer.	605 133 00
C86	3.3 nF	1%	125V	Polyst.	613 333 00
C87	1 uf	10%	100V	Polyes.	623 610 00
C88	0.1 uF	10%	250V	Polyes.	624 510 00
C89-98	0.1 uF	10%	100V	Polyes.	623 510 00
C99	10 nF	-20+80%	32V	Cer.	602 410 00
C100	0.1 uF	10%	100V	Polyes.	623 510 00
C101-102	15 pF	5%	400V	Cer.	605 115 00
C103	1 uF	10%	100V	Polyes.	623 610 00
C104-105	0.1 uF	10%	100V	Polyes.	623 510 00
C106-108	10 nF	-20+80%	32V	Cer.	602 410 00
C109	22 pF	±0.25 pF	400V	Cer.	605 122 02
C110	0.1 uF	±10%	100V	Polyes.	623 510 00
C111-112	10 nF	-20+80%	32V	Cer.	602 410 00

PARTS LIST

FOR

202 216

202/216C113	0.1 uF	10%	250V	Polyes.	624 510 00
C114	0.1 uF	10%	100V	Polyes.	623 510 00
C115	10 nF	-20/+80%	32V	Cer.	602 410 00
C116-118	0.1 uF	10%	100V	Polyes.	623 510 00
C119	0.1 uF	10%	250V	Polyes.	624 510 00
C120	10 nF	10%	250V	Polyes.	624 410 00
202/216D 1- 4	388A				830 038 80
D 5-42	1S920				830 192 00
202/216L 1- 2	1 mH	10%	RF Choke		740 310 01
L 3- 4	100 uH	10%	RF Choke		740 210 00
L 6			Coil		105 018 32
L 7			Coil		105 018 42
L 8			Coil		105 018 52
L 9	680 uH	10%	RF-Choke		740 268 00
L10			Coil		105 018 62
L11-12			Coil		105 018 72
L13			Coil		105 018 22
L14-15	22 uH	10%	RF Choke		740 122 00
L16-17	0.68 uH	10%	RF Choke		740 006 80
L18	22 uH	10%	RF Choke		740 122 00
L19	1 mH	10%	RF Choke		740 310 01
202/216R1	100 kohm	5%	1/3W	Car.	501 510 00
R2	100 ohms	5%	1/3W	Car.	501 210 00
R 3- 9	1 kohm	5%	1/3W	Car.	501 310 00
R10	220 kohms	5%	1/3W	Car.	501 522 00
R11	6.8 kohms	5%	1/3W	Car.	501 368 00
R12-14	1 kohm	5%	1/3W	Car.	501 310 00
R15-16	10 kohms	5%	1/3W	Car.	501 410 00
R17-18	18 kohms	5%	1/3W	Car.	501 418 00
R19-20	330 ohms	5%	1/3W	Car.	501 233 00
R21-22	33 kohms	5%	1/3W	Car.	501 433 00
R23	8.2 kohms	5%	1/3W	Car.	501 382 00
R24	39 ohms	5%	1/3W	Car.	501 139 00
R25	100 ohms	Var.			582 210 00
R26	39 ohms	5%	1/3W	Car.	501 139 00
R27-28	56 ohms	5%	1/3W	Car.	501 156 00
202/216S 1					375 200 45
S 2- 3					375 200 56
S 4					375 200 76
S 5					375 200 65

PARTS LIST

FOR

202 216

202/216SL1- 8	A9A-C		821 000 05
202/216T 1		Transformator	105 017 71
T 2		Transformator	105 017 81
T 3		Transformator	105 017 91
T 4		Transformator	105 017 62
T 5		Transformator	105 018 01
T 6- 7		Transformator	105 018 11
T 8		Transformator	105 216 61
T 9		Transformator	105 216 41
T10		Transformator	105 216 53
T11		Transformator	105 218 02
T12		Transformator	105 218 12
T13		Transformator	105 218 22
T14		Transformator	105 216 91
T15		Transformator	105 217 01
T16		Transformator	105 217 11
T17		Transformator	105 217 21
T18		Transformator	105 217 31
T19		Transformator	105 217 41
T20		Transformator	105 217 51
T21		Transformator	105 217 61
T22-23		Transformator	105 217 72
T24		Transformator	105 217 91
T25		Transformator	105 215 12
T26		Transformator	105 217 91
202/216TR1- 4	J310		840 031 01
202X 1	Crystal filter	38 MHz -2.7/+2.7 MHz	285 201 41
216X 1	Crystal filter	38 MHz -4/+4 MHz	385 201 31

PARTS LIST

FOR

203

203C 1	0.1 uF	10%	250V	Polyes.	624 510 00
C 2	47 nF	10%	250V	Polyes.	624 447 00
C 3	0.1 uF	10%	250V	Polyes.	624 510 00
C 4	560 pF	1%	500V	Polyst.	615 256 00
C 5	510 pF	1%	500V	Polyst.	615 251 00
C 6- 7	2.2 nF	1%	250V	Polyst.	614 322 00
C 8	22 uF		16V	Polyst.	615 722 00
C 9-10	47 nF	-20/+80%	16V	Cer.	601 447 00
C11	56 pF	5%	400V	Cer.	605 156 02
C12	22 pF	±0.25 pF	400V	Cer.	605 122 02
C13	1 pF				———
C14	56 pF	5%	400V	Cer.	605 156 02
C15-16	47 nF	-20/+80%	16V	Cer.	601 447 00
C17	0.1 uF	10%	250V	Polyes.	624 510 00
C18	47 nF	-20/+80%	16V	Cer.	601 547 00
C19	0.1 uF	10%	250V	Polyes.	624 510 00
C20	4.7 pF	±0.25 pF	400V	Cer.	605 047 01
C21	10 nF	-20/+80%	32V	Cer.	602 410 00
C22	0.1 uF	10%	250V	Polyes.	624 510 00
C23	110 pF	1%	500V	Polyst.	615 211 00
C24	10 nF	-20/+80%	32V	Cer.	602 410 00
C25-26	0.1 uF	10%	250V	Polyes.	624 510 00
C27-29	10 nF	-20/+80%	32V	Cer.	602 410 00
C30	0.1 uF	10%	250V	Polyes.	624 510 00
C31	390 pF	1%	500V	Polyst.	615 239 00
C32	0.1 uF	10%	250V	Polyes.	624 510 00
C33	10 nF	-20/+80%	32V	Cer.	602 410 00
C34	0.1 uF	10%	250V	Polyes.	624 510 00
203D 1- 4	BB109 G				833 010 90
D 5	BA379				833 037 90
203IC1	1496CN				850 149 60
203L 1- 3	100 uH	10%	RF Choke		740 210 00

PARTS LIST

FOR

203

203R 1	18 kohms	5%	1/3W	Car.	501 418 00
R 2	3.3 kohms	5%	1/3W	Car.	501 333 00
R 3	1.2 kohms	5%	1/3W	Car.	501 312 00
R 4	1.8 kohms	5%	1/3W	Car.	501 318 00
R 5	22 kohms	5%	1/3W	Car.	501 422 00
R 6	12 kohms	5%	1/3W	Car.	501 412 00
R 7	150 kohms	5%	1/3W	Car.	501 515 00
R 8	47 kohms	Var.			582 447 00
R 9	56 ohms	5%	1/3W	Car.	501 156 00
R10	100 ohms	5%	1/3W	Car.	501 210 00
R11	470 kohms	5%	1/3W	Car.	501 515 00
R12	470 kohms	5%	1/3W	Car.	501 547 00
R13	1.2 kohms	5%	1/3W	Car.	501 312 00
R14	470 kohms	5%	1/3W	Car.	501 547 00
R15	560 ohms	5%	1/3W	Car.	501 256 00
R16	27 kohms	5%	1/3W	Car.	501 427 00
R17	22 kohms	5%	1/3W	Car.	501 422 00
R18	12 kohms	5%	1/3W	Car.	501 412 00
R19	82 kohms	5%	1/3W	Car.	501 482 00
R20	1.5 kohms	5%	1/3W	Car.	501 315 00
R21	2.7 kohms	5%	1/3W	Car.	501 327 00
R22	Not used				
R23	680 ohms	5%	1/3W	Car.	501 268 00
R24	10 kohms	5%	1/3W	Car.	501 410 00
R25	1.5 kohms	5%	1/3W	Car.	501 315 00
R26	2.2 kohms	5%	1/3W	Car.	501 322 00
R27	10 kohms	5%	1/3W	Car.	501 410 00
R28	27 kohms	5%	1/3W	Car.	501 427 00
R29	33 ohms	5%	1/3W	Car.	501 133 00
R30	330 ohms	5%	1/3W	Car.	501 233 00
R31	100 ohms	5%	1/3W	Car.	501 210 00
R32	47 ohms	5%	1/3W	Car.	501 147 00
R33	1 kohms	5%	1/3W	Car.	501 310 00
R34	10 kohms	5%	1/3W	Car.	501 410 00
R35	470 ohms	5%	1/3W	Car.	501 247 00
R36	1 kohm	Var.			582 310 00
R37	680 ohms	5%	1/3W	Car.	501 268 00
R38	470 ohms	5%	1/3W	Car.	501 247 00
R39	56 ohms	5%	1/3W	Car.	501 156 00
R40	10 kohms	5%	1/3W	Car.	501 410 00

PARTS LIST

FOR

203

203T 1			105 215 21
T 2			105 215 31
T 3			105 215 41
T 4			105 216 71
T 5			105 106 62
203TR1- 3	BC547B		840 054 70
TR4	BSX20		840 002 00
TR5	TIS88A		843 008 80
TR6	BC547B		840 054 70
TR7	TIS88A		843 008 80
203X 1		2.999 750 MHz	385 202 23

PARTS LIST

FOR

217

217C 1	10 nF	10%	250V	Polyes.	624 410 00
C 2	0.1 uF	10%	250V	Polyes.	624 510 00
C 3	1 nF	1%	500V	Polyst.	615 310 01
C 4- 8	0.1 uF	10%	250V	Polyes.	624 510 00
C 9	6.8 nF	1%	125V	Polyst.	613 368 00
C10	0.1 uF	10%	250V	Polyes.	624 510 00
C11	1 nF	1%	500V	Polyst.	615 310 01
C12	10 nF	10%	250V	Polyes.	624 410 00
217D 1-10	1S920				830 192 00
217L 1- 2			Coil		105 215 81
217R 1	6.8 kohms	5%	1/3W	Car.	501 368 00
R 2- 6	100 ohms	5%	1/3W	Car.	501 210 00
R 7-11	6.8 kohms	5%	1/3W	Car.	501 368 00
R12-16	3.3 kohms	5%	1/3W	Car.	501 333 00
R17-21	10 kohms	5%	1/3W	Car.	501 410 00
R22	3.3 kohms	5%	1/3W	Car.	501 333 00
R23	100 ohms	5%	1/3W	Car.	501 210 00
217X 1	Filter LSB	1.4 MHz			385 112 02
X 2	Option				---
X 3	Filter Narrow				385 201 01
X 4	Filter Verynarrow				385 200 91

995 207 01

PARTS LIST

FOR

218

218C1	10 nF	10%	250V	Polyes.	624 410 00
C2	0.1 uF	10%	250V	Polyes.	624 510 00
C3	1 nF	1%	500V	Polyst.	615 310 01
C4-8	0.1 uF	10%	250V	Polyes.	624 510 00
C9	6.8 nF	1%	125V	Polyst.	613 368 00
C10	0.1 uF	10%	250V	Polyes.	624 510 00
C11	1 nF	1%	500V	Polyst.	615 310 01
C12	10 nF	10%	250V	Polyes.	624 410 00
218D1-10	1S920				830 192 00
218L1-2			Coil		105 215 81
218R1	6.8 kohms	5%	1/3W	Car.	501 368 00
R2-6	100 ohms	5%	1/3W	Car.	501 210 00
R7-11	6.8 kohms	5%	1/3W	Car.	501 368 00
R12-16	3.3 kohms	5%	1/3W	Car.	501 333 00
R17-21	10 kohms	5%	1/3W	Car.	501 410 00
R22	3.3 kohms	5%	1/3W	Car.	501 333 00
R23	100 ohms	5%	1/3W	Car.	501 210 00
218X1	Filter LSB	1.4 MHz			385 112 02
X2	Filter Very narrow				385 200 91
X3	Filter Narrow				385 201 01
X4	Filter AM	1.4 MHz			385 111 91

995 207 11

PARTS LIST

FOR

205

205C 1	4.7 nF	-20/+80%	32V	Cer.	602 347 00
C 2	22 uF		16V	Tan	651 722 00
C 3	0.1 uF	10%	250V	Polyes.	624 510 00
C 4	2.2 pF	±0.25 pF	400V	Cer.	605 022 00
C 5	0.1 uF	10%	250V	Polyes.	624 510 00
C 6	4.7 nF	-20/+80%	32V	Cer.	602 347 00
C 7	0.1 uF	10%	250V	Polyes.	624 510 00
C 8	100 uF		25V	W.alum.	652 810 00
C 9-12	0.1 uF	10%	250V	Polyes.	624 510 00
C13	1 nF	1%	500V	Polyst.	615 310 00
C14	0.1 uF	10%	250V	Polyes.	624 510 00
C15	4.7 nF	-20/+80%	32V	Cer.	602 347 00
C16	0.1 uF	10%	250V	Polyes.	624 510 00
C17	10 pF	5%	400V	Cer.	605 110 00
C18	1.2 nF	1%	500V	Polyst.	615 312 00
C19-20	22 nF	10%	250V	Polyes.	624 510 00
C21	120 pF	5%	400V	Cer.	605 212 00
C22	470 pF	1%	500V	Polyst.	615 247 00
C23	4.7 nF	-20/+80%	32V	Cer.	602 347 00
C24-28	0.1 uF	10%	250V	Polyes.	624 510 00
C29	3.9 nF	1%	250V	Polyst.	614 339 00
C30	4.7 nF	-20/+80%	32V	Cer.	602 347 00
C31-32	0.1 uF	10%	250V	Polyes.	624 510 00
C33	0.47 uF	10%	250V	Polyes.	624 547 00
C34-35	0.1 uF	10%	250V	Polyes.	624 510 00
C36	10 nF	-20/+80%	32V	Cer.	602 410 00
205D 1- 9	1S920				830 192 00
D10	AAZ17				830 001 70
D11-12	1S920				830 192 00
205IC1	TBA120				850 012 00
205L 1			Coil		105 106 92
L 2			Coil		105 107 22
L 3- 4	100 uH	10%	RF-Choke		740 210 00
205R 1	10 kohms	5%	1/3W	Car.	501 410 00
R 2	100 ohms	5%	1/3W	Car.	501 210 00
R 3	10 kohms	5%	1/3W	Car.	501 410 00
R 4	680 ohms	5%	1/3W	Car.	501 268 00
R 5	1 kohm	5%	1/3W	Car.	501 310 00
R 6	10 kohms	5%	1/3W	Car.	501 410 00

PARTS LIST

FOR

205

205R 7	27 ohms	5%	1/3W	Car.	501 127 00
R 8	100 ohms	5%	1/3W	Car.	501 210 00
R 9	1 kohm	5%	1/3W	Car.	501 310 00
R10	10 kohms	5%	1/3W	Car.	501 410 00
R11-12	1 kohm	5%	1/3W	Car.	501 310 00
R13	1.2 kohms	5%	1/3W	Car.	501 312 00
R14	150 kohms	5%	1/3W	Car.	501 515 00
R15	10 kohms	5%	1/3W	Car.	501 410 00
R16	470 ohms	5%	1/3W	Car.	501 247 00
R17-18	330 ohms	5%	1/3W	Car.	501 233 00
R19	1 kohm	5%	1/3W	Car.	501 310 00
R20	4.7 kohms	5%	1/3W	Car.	501 347 00
R21-22	100 kohms	5%	1/3W	Car.	501 510 00
R23	680 ohms	5%	1/3W	Car.	501 268 00
R24	33 ohms	5%	1/3W	Car.	501 133 00
R25	3.3 kohms	5%	1/3W	Car.	501 333 00
R26	1 kohm	5%	1/3W	Car.	501 310 00
R27	68 kohms	5%	1/3W	Car.	501 468 00
R28	27 kohms	5%	1/3W	Car.	501 427 00
R29	330 ohms	5%	1/3W	Car.	501 233 00
R30	6.8 kohms	5%	1/3W	Car.	501 368 00
R31	4.7 kohms	5%	1/3W	Car.	501 347 00
R32	1.2 kohms	5%	1/3W	Car.	501 312 00
R33	1 kohm	5%	1/3W	Car.	501 310 00
R34	3.3 kohms	5%	1/3W	Car.	501 333 00
R35	100 ohms	5%	1/3W	Car.	501 210 00
R36	1.2 kohms	5%	1/2W	Car.	502 312 00

205T 1	Transformer	105 107 02

205TR1- 2	BF240	840 024 00
TR3	BC547B	840 054 70
TR4	BF240	840 024 00
TR5	BC547B	840 054 70

PARTS LIST

FOR

220

220C 1	0.47uF	10%	100V	Polyes.	623 547 00
C 2	0.1 uF	10%	250V	Polyes.	624 510 00
C 3	0.1 uF	10%	100V	Polyes.	623 510 00
C 4	47 nF	-20+80%	16V	Cer.	601 447 00
C 5	22 uF		16V	Tan.	651 722 00
C 6-7	10 nF	-20+80%	32V	Cer.	602 410 00
C 8	0.1 uF	-20+80%	16V	Cer.	601 510 00
C 9	0.1 uF	10%	250V	Polyes.	624 510 00
C10	10 nF	10%	250V	Polyes.	624 410 00
C11	0.47 uF	10%	100V	Polyes.	623 547 00
C12	10 nF	10%	250V	Polyes	624 410 00
C13	10 nF	-20+80%	32V	Cer.	602 410 00
C14	470 uF		16V	W.alum.	651 847 00
C15	47 nF	-20+80%	16V	Cer.	601 447 00
C16	22 uF		16V	Tan.	651 722 00
C17	100 uF		25V	W.alum.	652 810 00
C18	110 pF	1%	500V	Polyst.	615 211 00
C19	1 uF	10%	100V	Polyes.	623 610 00
C20	220 pF	1%	500V	Polyst.	615 222 00
C21	10 nF	-20+80%	32V	Cer.	602 410 00
C22	0.1 uF	10%	100V	Polyes.	623 510 00
C23	47 pF	5%	400V	Cer.	605 147 00
C24	10 nF	10%	250V	Polyes.	624 410 00
C25	110 pF	1%	500V	Polyst.	615 211 00
C26	1.2 nF	1%	500V	Polyst.	615 312 00
C27	100 uF		25V	W.alum.	652 810 00
C28	4.7 nF	-20+80%	32V	Cer.	602 347 00
C29	47 nF	-20+80%	16V	Cer	601 447 00
C30	0.1 uF	10%	100V	Polyes.	623 510 00
C31	47 nF	-20+80%	16V	Cer.	601 447 00
C32	0.1 uF	-20+80%	16V	Cer.	601 510 00
C33	5.6 nF	1%	63V	Polyst.	612 356 00
C34	0.22 uF	10%	250V	Polyes.	624 522 01
C35	22 uF		16V	Tan.	651 722 00
C36	1.2 nF	1%	500V	Polyst.	615 312 00
C37	2.2 nF	1%	250V	Polyst.	614 322 00
C38	330 pF	1%	500V	Polyst.	615 233 00
C39	0.1 uF	-20+80%	16V	Cer.	601 510 00
C40	47 nF	-20+80%	16V	Cer.	601 447 00
C41	10 nF	10%	250V	Polyes.	624 410 00
C42	0.1 uF	10%	100V	Polyes.	623 510 00

PARTS LIST

FOR

220

220C43	100 uF		25V	W.alum.	652 810 00
C44	0.1 uF	10%	250V	Polyes.	624 510 00
C45	470 uF		16V	W.alum.	651 847 00
C46	47 nF	-20+80%	16V	Cer.	601 447 00
C47-49	0.1 uF	-20+80%	16V	Cer.	601 510 00
C50	0.1 uF	10%	250V	Polyes.	624 510 00
C51	47 pF	5%	400V	Cer.	605 147 00
C52	0.22uF	10%	250V	Polyes.	624 522 01
C53	3.3 pF	±0.25pF	400V	Cer.	605 033 00
C54	2.7 pF	±0.25pF	400V	Cer.	605 027 00
C55	47 pF	5%	400V	Cer.	605 147 00
C56	0.1 uF	10%	250V	Polyes.	624 510 00
C57	3.3 nF	1%	125V	Polyst.	613 333 00
C58-59	0.22uF	10%	250V	Polyes.	624 522 01
C60-61	0.22uF	10%	100V	Polyes.	623 522 00
C62-63	0.1 uF	10%	100V	Polyes.	623 510 00
220D 1	BB109				833 010 90
D 2-6	IS920				830 192 00
220IC1	1496				850 149 60
IC2	TBA810S				850 081 00
IC3	7493				850 749 31
220L 1-5	100 uH		RF-Choke		740 210 00
L 6-7			Coil		105 215 91
L 8-15	100 uH		RF-Choke		740 210 00
220PL1	32 Way				701 000 20
220R 1	820 ohms	5%	1/3W	Car.	501 282 00
R 2	4.7 kohms	5%	1/3W	Car.	501 347 00
R 4	47 kohms			Var.	582 447 01
R 5	180 kohms	5%	1/3W	Car.	501 518 00
R 6	1 kohms	5%	1/3W	Car.	501 310 00
R 7	100 kohms	5%	1/3W	Car.	501 510 00
R 8	33 kohms	5%	1/3W	Car.	501 433 00
R 9	1.8 kohms	5%	1/3W	Car.	501 318 00
R10	100 kohms	5%	1/3W	Car.	501 510 00
R11	4.7 kohms	5%	1/3W	Car.	501 347 00
R12	3.9 kohms	5%	1/3W	Car.	501 339 00
R13	15 kohms	5%	1/3W	Car.	501 415 00
R14	1.8 kohms	5%	1/3W	Car.	501 318 00
R15	150 ohms	5%	1/3W	Car.	501 215 00
R16	4.7 kohms	5%	1/3W	Car.	501 347 00

PARTS LIST

FOR

220

220R17	1.2 kohms	5%	1/3W	Car.	501 312 00
R18	22 kohms	5%	1/3W	Car.	501 422 00
R19	1 kohms	5%	1/3W	Car.	501 310 00
R20	220 ohms	5%	1/3W	Car.	501 222 00
R21	3.3 kohms	5%	1/3W	Car.	501 333 00
R22	470 ohms	5%	1/3W	Car.	501 247 00
R23	270 ohms	5%	1/3W	Car.	501 227 00
R24-25	680 ohms	5%	1/3W	Car.	501 268 00
R26	12 kohms	5%	1/3W	Car.	501 412 00
R27	18 kohms	5%	1/3W	Car.	501 418 00
R28	10 kohms	5%	1/3W	Car.	501 410 00
R29	27 kohms	5%	1/3W	Car.	501 427 00
R30	8.2 kohms	5%	1/3W	Car.	501 382 00
R31	1 kohms	5%	1/3W	Car.	501 310 00
R32	2.7 kohms	5%	1/3W	Car.	501 327 00
R33	2.2 kohms	5%	1/3W	Car.	501 322 00
R34	680 ohms	5%	1/3W	Car.	501 268 00
R35	56 ohms	5%	1/3W	Car.	501 156 00
R36	680 ohms	5%	1/3W	Car.	501 268 00
R37	10 kohms	5%	1/3W	Car.	501 410 00
R38	33 ohms	5%	1/2W	Car.	502 133 00
R39	8.2 kohms	5%	1/3W	Car.	501 382 00
R40	15 kohms	5%	1/3W	Car.	501 415 00
R41	820 ohms	5%	1/3W	Car.	501 282 00
R42	270 ohms	5%	1/3W	Car.	501 227 00
R43	100 kohms	5%	1/3W	Car.	501 510 00
R44-45	10 kohms	5%	1/3W	Car.	501 410 00
R46	12 kohms	5%	1/3W	Car.	501 412 00
R47	470 ohms	5%	1/3W	Car.	501 247 00
R48	820 ohms	5%	1/3W	Car.	501 282 00
R49	220 ohms	5%	1/3W	Car.	501 222 00
R50	10 kohms	5%	1/3W	Car.	501 410 00
R51	22 ohms	5%	1/3W	Car.	501 122 00
R52	47 ohms	5%	1/3W	Car.	501 147 00
R53	5.6 kohms	5%	1/3W	Car.	501 356 00
R54	39 kohms	5%	1/3W	Car.	501 439 00
R55	330 ohms	5%	1/3W	Car.	501 233 00
R56	120 ohms	5%	1/3W	Car.	501 212 00
R57-58	470 ohms	5%	1/3W	Car.	501 247 00
R59	390 ohms	5%	1/3W	Car.	501 239 00

PARTS LIST

FOR

220

220R60	220 ohms	5%	1/3W	Car.	501 222 00
R61	100 ohms	5%	1/3W	Car.	501 210 00
R62	2.7 kohms	5%	1/3W	Car.	501 327 00
R63	10 kohms	5%	1/3W	Car.	501 410 00
R64	680 ohms	5%	1/3W	Car.	501 268 00
R65	2.7 kohms	5%	1/3W	Car.	501 327 00
R66	680 ohms	5%	1/3W	Car.	501 268 00
R67	1 ohms	5%	2W	WW	523 010 00
R68	820 ohms	5%	1/3W	Car.	501 282 00
R69-70	3.3 kohms	5%	1/3W	Car.	501 333 00
R71	6.8 kohms	5%	1/3W	Car.	501 368 00
R72	1 kohms	5%	1/3W	Car.	501 310 00
R73-74	560 ohms	5%	1/3W	Car.	501 256 00
R75	4.7 kohms	5%	1/3W	Car.	501 347 00
R76	6.8 kohms	5%	1/3W	Car.	501 368 00
R77	56 ohms	5%	1/3W	Car.	501 156 00
R78	27 ohms	5%	1/3W	Car.	501 127 00

220T 1	Transformator	105 216 01
T 2	Transformator	105 218 31
T 3	Transformator	105 215 51
T 4	Transformator	105 215 61
T 5	Transformator	105 215 71

220TR 1	BC547B	840 054 70
TR 2	BF240	840 024 00
TR 3	BC557B	840 055 70
TR 4	BC547B	840 054 70
TR 5-6	BF240	840 024 00
TR 7	BSX20	840 002 00
TR 8	BC547B	840 054 70
TR 9-10	BSX20	840 002 00

220X 1	12.5965MHz	385 201 52
X 2	12.5950MHz	385 201 62
X 3	TCXO 11,2 MHz	811 000 01

PARTS LIST

FOR

207

207C 1- 3	0.1 uF	10%	250V	Polyes.	624 510 00
C 4	4.7 nF		32V	Cer.	602 347 00
C 5	47 nF	-20/+80%	12V	Cer.	601 447 00
C 6- 9	47 nF	-20/+80%	16V	Cer.	601 447 00
C10	4.7 nF		32V	Cer.	602 347 00
C11-12	47 nF	-20/+80%	16V	Cer.	601 447 00
C13	47 nF	-20/+80%	12V	Cer.	601 447 00
C14-15	270 pF	1%	500V	Polyst.	615 227 00
C16-17	220 pF	1%	500V	Polyst.	615 222 00
C18-19	0.1 uF	10%	250V	Polyes.	624 510 00
C20	47 nF	-20/+80%	16V	Cer.	601 447 00
207IC1	74S74				850 747 41
IC2	74LS74				850 747 40
IC3	74H30				850 743 02
IC4	74LS20				850 742 01
IC5	93S10				850 931 00
IC6	74S32				850 743 21
IC7	74LS160				857 416 00
IC8	74LS93				850 749 32
IC9	74LS00				850 740 02
IC10	74LS02				850 740 21
IC11	93S10				850 931 00
IC12	74LS90				850 749 01
IC13	74LS160				857 416 00
IC14	93S10				850 931 00
IC15	74LS160				850 931 00
IC16	74LS 90				850 749 01
IC17	74163				857 416 30
IC18	74LS30				850 743 01
IC19-20	74LS00				850 740 02
IC21-22	7426				850 742 60
IC23	74LS02				
207L 1- 2	100 uH	10%	RF-Choke		740 210 00
207PL 1	64 Way				751 000 22
207R 1	68 ohms	5%	1/3W	Car.	501 168 00
R 2	3.3 kohms	5%	1/3W	Car.	501 333 00
R 3	1.5 kohms	5%	1/3W	Car.	501 315 00
R 4	10 kohms	5%	1/3W	Car.	501 410 00
R 5	4.7 kohms	5%	1/3W	Car.	501 347 00

PARTS LIST

FOR

207

207R 6	330 ohms	5%	1/3W	Car.	501 233 00
R 7	1 kohm	5%	1/3W	Car.	501 310 00
R 8	220 ohms	5%	1/3W	Car.	501 222 00
R 9	82 ohms	5%	1/3W	Car.	501 182 00
R10	220 ohms	5%	1/3W	Car.	501 222 00
R11	82 ohms	5%	1/3W	Car.	501 182 00
R12	180 ohms	5%	1/3W	Car.	501 218 00
R13	47 ohms	5%	1/3W	Car.	501 147 00
R14	390 ohms	5%	1/3W	Car.	501 239 00
R15	3.3 kohms	5%	1/3W	Car.	501 333 00
R16	820 ohms	5%	1/3W	Car.	501 282 00
R17	100 ohms	5%	1/3W	Car.	501 210 00
R18	1 kohm	5%	1/3W	Car.	501 310 00
R19	330 ohms	5%	1/3W	Car.	501 233 00
R20	3.3 kohms	5%	1/3W	Car.	501 333 00
R21	390 ohms	5%	1/3W	Car.	501 239 00
R22-24	1 kohm	5%	1/3W	Car.	501 310 00
R25-26	1.5 kohms	5%	1/3W	Car.	501 315 00
R27	1 kohm	5%	1/3W	Car.	501 310 00
R28	4.7 kohms	5%	1/3W	Car.	501 347 00
R29	1 kohm	5%	1/3W	Car.	501 310 00
R30	10 kohms	5%	1/3W	Car.	501 410 00
R31-32	4.7 kohms	5%	1/3W	Car.	501 347 00
R33-37	1 kohm	5%	1/3W	Car.	501 310 00
R38	1.8 kohm	5%	1/3W	Car.	501 318 00
R39	1 kohm	5%	1/3W	Car.	501 310 00
R40	1.8 kohm	5%	1/3W	Car.	501 318 00
207TR1	BSX20				840 002 00
TR2- 3	BC547B				840 054 70
TR4	BSX20				840 002 00
TR5- 6	BC547B				840 054 70

PARTS LIST

FOR

208

208C 1	4.7 nF	-20/+80%	32V	Cer.	602 347 00
C 2	0.22 uF	10%	100V	Polyes.	623 522 00
C 3- 5	47 nF	-20/+80%	16V	Cer.	601 447 00
C 6	4.7 nF	-20/+80%	32V	Cer.	602 347 00
C 7	0.1 uF	10%	250V	Polyes.	624 510 00
C 8	47 nF	-20/+80%	16V	Cer.	601 447 00
C 9	0.1 uF	10%	250V	Polyes.	624 510 00
C10-11	47 nF	-20/+80%	16V	Cer.	601 447 00
C12	0.1 uF	10%	250V	Polyes.	624 510 00
C13	180 pF	1%	500V	Polyst.	615 218 00
C14-15	47 nF	-20/+80%	16V	Cer.	601 447 00
C16	0.1 uF	10%	250V	Polyes.	624 510 00
C17	0.47 uF	10%	100V	Polyes.	623 547 00
C18	130 pF	1%	500V	Polyst.	615 213 00
C19	5.6 pF	±0.25 pF	400V	Cer.	605 056 00
C20	220 pF	1%	500V	Polyst.	615 222 00
C21	33 pF	5%	400V	Cer.	605 133 00
C22	180 pF	1%	500V	Polyst.	615 218 00
C23	39 pF	5%	400V	Cer.	605 139 00
C24	180 pF	1%	500V	Polyst.	615 218 00
C25	22 pF	5%	400V	Cer.	605 122 00
C26	120 pF	1%	500V	Polyst.	615 212 00
C27-28	0.1 uF	10%	250V	Polyes.	624 510 00
C29	68 pF	5%	400V	Cer.	605 168 00
C30	220 pF	1%	500V	Polyst.	615 222 00
C31	0.68 uF	10%	100V	Polyes.	623 568 00
C32	68 pF	5%	400V	Cer.	605 168 00
C33	0.1 uF	10%	250V	Polyes.	624 510 00
C34	3.3 nF	1%	125V	Polyes.	613 333 00
C35	1.8 nF	1%	250V	Polyst.	614 318 00
208IC1	7805				850 780 50
IC2	74LS13				850 741 30
IC3	74LS73				850 747 30
IC4	1496				850 149 60
IC5	74LS13				850 741 30
IC6	74490				857 449 00
IC7-10	74LS93				850 749 32
IC11	74LS20				850 742 01
IC12	74LS00				850 740 02

PARTS LIST

FOR

208

208IC13	74121				857 412 10
IC14	74LS13				850 741 30
IC15	74LS00				850 740 02
IC16	74LS03				850 740 31
IC17	7416				850 741 60
208L 1	100 uH	10%	RF-Choke		740 210 00
L 2			Coil		105 218 92
L 3			Coil		105 219 11
L 4			Coil		105 219 01
L 5			Coil		105 218 81
L 6	100 uH	10%	RF-Choke		740 210 00
208PL1	32 Way				751 000 20
208R 1	4.7 kohms	5%	1/3W	Car.	501 347 00
R 2	680 ohms	5%	1/3W	Car.	501 268 00
R 3	1 kohm	5%	1/3W	Car.	501 310 00
R 4	15 kohms	5%	1/3W	Car.	501 415 00
R 5- 6	4.7 kohms	5%	1/3W	Car.	501 347 00
R 7	1.2 kohms	5%	1/3W	Car.	501 312 00
R 8	1.8 kohms	5%	1/3W	Car.	501 318 00
R 9	18 kohms	5%	1/3W	Car.	501 418 00
R10	12 kohms	5%	1/3W	Car.	501 412 00
R11-14	1 kohm	5%	1/3W	Car.	501 310 00
R15	680 ohms	5%	1/3W	Car.	501 268 00
R16	180 ohms	5%	1/3W	Car.	501 218 00
R17	560 ohms	5%	1/3W	Car.	501 256 00
R18	270 ohms	5%	1/3W	Car.	501 227 00
R19-20	470 ohms	5%	1/3W	Car.	501 247 00
R21-24	1 kohm	5%	1/3W	Car.	501 310 00
R25	15 kohms	5%	1/3W	Car.	501 415 00
R26	12 kohms	5%	1/3W	Car.	501 412 00
R27	470 ohms	5%	1/3W	Car.	501 247 00
R28	560 ohms	5%	1/3W	Car.	501 256 00
R29	10 kohms	5%	1/3W	Car.	501 410 00
R30	27 kohms	5%	1/3W	Car.	501 427 00
R31	100 kohms	5%	1/3W	Car.	501 510 00
R32	1 kohm	5%	1/3W	Car.	501 310 00
R33	390 ohms	5%	1/3W	Car.	501 239 00
R34	1.2 kohms	5%	1/3W	Car.	501 312 00

PARTS LIST

FOR

208

208R35	10 kohms	5%	1/3W	Car.	501 410 00
R36	47 kohms	5%	1/3W	Car.	501 447 00
R37	560 ohms	5%	1/3W	Car.	501 256 00
R38	150 ohms	5%	1/3W	Car.	501 215 00
R39	15 kohms	5%	1/3W	Car.	501 415 00
R40	4.7 kohms	5%	1/3W	Car.	501 347 00
R41-44	1 kohm	5%	1/3W	Car.	501 310 00
R45	4.7 kohms	5%	1/3W	Car.	501 347 00
R46-47	1 kohm	5%	1/3W	Car.	501 310 00
R48	1.8 kohms	5%	1/3W	Car.	501 318 00
R49	1 kohm	5%	1/3W	Car.	501 310 00
R50	5.6 kohm	5%	1/3W	Car.	501 356 00
208T 1			Transformator		105 219 21
208TR1	BSX20				840 002 00
TR2- 5	BC547B				840 054 70

PARTS LIST

FOR

209

209C 1	0.1 uF	10%	250V	Polyes.	624 510 0
C 2	68 nF	10%	100V	Polyes.	623 468 0
C 3	0.1 uF	10%	250V	Polyes.	624 510 0
C 4	22 nF	10%	250V	Polyes.	624 422 0
C 5	0.1 uF	10%	250V	Polyes.	624 510 0
C 6	22 nF	10%	250V	Polyes.	624 422 0
C 7	2.2 nF	1%	250V	Polyst.	614 322 0
C 8	3.3 nF	1%	125V	Polyst.	613 333 0
C 9	33 pF	5%	400V	Cer.	605 133 0
C10	47 nF	10%	250V	Polyes.	624 447 0
C11	33 pF	5%	400V	Cer.	605 133 0
C12	470 uF		16V	W.alum.	651 847 0
C13	1000 uF		16V	W.alum.	651 910 0
C14-16	100 uF		16V	W.alum.	651 810 0
C17-19	0.1 uF	10%	250V	Polyes.	624 510 0
C20-21	33 pF	5%	400V	Cer.	605 133 0
C22	0.22 uF	10%	250V	Polyes.	624 522 0
C23	0.47 uF	10%	100V	Polyes.	623 547 0
C24	22 nF	10%	250V	Polyes.	624 422 0
C25	10 nF	10%	250V	Polyes.	624 410 0
C26	47 nF	10%	250V	Polyes.	624 447 0
C27-29	10 nF	10%	250V	Polyes.	624 410 0
C30	47 nF	10%	250V	Polyes.	624 447 0
C31	100 pF	1%	500V	Polyst.	615 210 0
C32	12 pF	5%	400V	Cer.	605 112 0
C33	0.1 uF	10%	250V	Polyes.	624 510 0
C34	10 nF	10%	250V	Polyes.	624 410 0
C35	4.7 nF	-20/+80%	32V	Cer.	602 347 0
C36	470 pF	1%	500V	Polyst.	615 247 0
C37-38	0.1 uF	10%	250V	Polyes.	624 510 0
C39	470 uF		16V	W.alum.	651 847 0
C40-41	4.7 nF	-20/+80%	32V	Cer.	602 347 0
C42	0.1 uF	10%	250V	Polyes.	624 510 0
C43	1 uF	10%	100V	Polyes.	623 610 0
C44	47 nF	10%	250V	Polyes.	624 447 0
C45	47 nF	-20/+80%	16V	Cer.	601 447 0
C46	47 nF	10%	250V	Polyes.	624 447 0
C47	4.7 nF	-20/+80%	32V	Cer.	602 347 0
C48	47 nF	-20/+80%	16V	Cer.	601 447 0
C49-50	0.1 uF	10%	250V	Polyes.	624 510 0
C51	1 uF	10%	100V	Polyes.	623 610 0
C52	47 nF	-20/+80%	16V	Car.	601 447 0
C53	47 nF	-20/+80%	16V	Car.	601 447 0

PARTS LIST

FOR

209

209D 1- 2	BZX79C6V8	Zener			832 796 80
D 3	BB113				833 011 30
D 4	BB104				833 010 40
D 5-6	IS 920				830 192 00
209IC1- 4	301A				850 030 10
209L 1- 2	220 uH	10%	RF-Choke		740 222 00
L 3- 4	1 mH	10%	RF-Choke		740 310 01
L 5			Coil		105 218 61
L 6			Coil		105 218 72
L 7	220 uH	10%	RF-Choke		740 222 00
209PL 1	32 Way				751 000 20
209R 1	22 kohms	5%	1/3W	Car.	501 422 00
R 2	18 kohms	5%	1/3W	Car.	501 418 00
R 3- 4	270 ohms	5%	1/3W	Car.	501 227 00
R 5	22 kohms	5%	1/3W	Car.	501 422 00
R 6	18 kohms	5%	1/3W	Car.	501 418 00
R 7	33 ohms	5%	1/3W	Car.	501 133 00
R 8	22 ohms	5%	1/3W	Car.	501 122 00
R 9	39 ohms	5%	1/3W	Car.	501 139 00
R10-11	4.7 kohms	5%	1/3W	Car.	501 347 00
R12	18 kohms	5%	1/3W	Car.	501 418 00
R13-14	1 kohm		Var.		582 310 00
R15	47 kohms	5%	1/3W	Car.	501 447 00
R16	12 kohms	5%	1/3W	Car.	501 412 00
R17-18	4.7 kohms	5%	1/3W	Car.	501 347 00
R19	15 kohms	5%	1/3W	Car.	501 415 00
R20	56 kohms	5%	1/3W	Car.	501 456 00
R21	18 kohms	5%	1/3W	Car.	501 418 00
R22	12 kohms	5%	1/3W	Car.	501 412 00
R23	18 kohms	5%	1/3W	Car.	501 418 00
R24	8.2 kohms	5%	1/3W	Car.	501 382 00
R26	4.7 kohms	5%	1/3W	Car.	501 347 00
R27	100 kohms	5%	1/3W	Car.	501 510 00
R28	4.7 kohms	5%	1/3W	Car.	501 347 00
R29	560 kohms	5%	1/3W	Car.	501 556 00
R30	100 kohms	5%	1/3W	Car.	501 510 00
R31	2.2 kohms	5%	1/3W	Car.	501 322 00
R32	3.9 kohms	5%	1/3W	Car.	501 339 00
R33	1.5 kohms	5%	1/3W	Car.	501 315 00
R34	4.7 kohms	5%	1/3W	Car.	501 347 00
R35	220 ohms	5%	1/3W	Car.	501 222 00
R36	15 kohms	5%	1/3W	Car.	501 415 00
R37	560 ohms	5%	1/3W	Car.	501 256 00
R38	2.7 kohms	5%	1/3W	Car.	501 327 00
R39	100 ohms	5%	1/3W	Car.	501 210 00

PARTS LIST

FOR

209

209R40	1 kohm	5%	1/3W	Car.	501 310 00
R41	180 ohms	5%	1/3W	Car.	501 218 00
R42	22 kohms	5%	1/3W	Car.	501 422 00
R43	15 kohms	5%	1/3W	Car.	501 415 00
R44	3.3 kohms	5%	1/3W	Car.	501 333 00
R45	2.7 kohms	5%	1/3W	Car.	501 327 00
R46	4.7 kohms	5%	1/3W	Car.	501 347 00
R47	100 ohms	5%	1/3W	Car.	501 210 00
R48	1 kohm	5%	1/3W	Car.	501 310 00
R49	180 ohms	5%	1/3W	Car.	501 218 00
R50	39 ohms	5%	1/3W	Car.	501 139 00
R51	100 ohms	5%	1/3W	Car.	501 210 00
R52	120 ohms	5%	1/3W	Car.	501 212 00
R53	100 ohms	5%	1/3W	Car.	501 210 00
R54	100 kohms	5%	1/3W	Car.	501 510 00
R55	120 ohms	5%	1/3W	Car.	501 212 00
R56	4.7 kohms	5%	1/3W	Car.	501 347 00
R57	3.3 kohms	5%	1/3W	Car.	501 333 00
R58	10 kohms	5%	1/3W	Car.	501 410 00
R59	82 ohms	5%	1/3W	Car.	501 182 00
R60	56 ohms	5%	1/3W	Car.	501 156 00
R61	220 ohms	5%	1/3W	Car.	501 222 00
R62	10 kohms	5%	1/3W	Car.	501 410 00
R63	100 kohms	5%	1/3W	Car.	501 510 00
R64	120 ohms	5%	1/3W	Car.	501 212 00
R65	22 ohms	5%	1/3W	Car.	501 122 00
R66	22 kohms	5%	1/3W	Car.	501 422 00

209T 1	Transformator	105 218 51
T 2	Transformator	105 218 41

209TR1- 4	BF240	840 024 00
TR5	BSX20	840 002 00
TR6	BC547B	840 054 70
TR7	BSX20	840 002 00
TR8	BC547B	840 054 70

PARTS LIST

FOR

210

210C 1	330 pF	1%	500V	Polyst.	615 233 00
C 2	110 pF	1%	500V	Polyst.	615 211 00
C 3	22 pF	5%	400V	Cer.	605 122 00
C 4-6	0.1 uF	10%	100V	Polyes.	623 510 00
C 7	100 uF		25V	W. alum.	652 810 00
C 8	1000 uF		16V	W. alum.	651 910 00
C 9	33 pF	5%	400V	Cer.	605 133 00
C10-11	0.47 uF	10%	100V	Polyes.	623 547 00
C12	3.9 nF	1%	125V	Polyst.	613 339 00
C13-15	10 nF	10%	250V	Polyes.	624 410 00
C16-18	3.3 pF	±0.25 pF	400V	Cer.	605 033 00
C19	47 pF	5%	400V	Cer.	605 147 00
C20-22	0.1 uF	10%	100V	Polyes.	623 510 00
C23	100 uF		25V	W.alum.	651 910 00
C24	(4.5-26)pF	Var.			683 126 00
C25	100 uF		25V	W.alum	651 910 00
C26	(4.5-26)pF	Var.			683 126 00
C27	100 uF		25V	W.alum.	651 910 00
C28	(4.5-26)pF	Var.			683 126 00
C29-31	100 pF	1%	500V	Polyst.	615 210 00
C32-35	0.1 uF	10%	100V	Polyes.	623 510 00
C36-38	3.3 pF	±0.25 pF	400V	Cer.	605 033 00
C39	10 nF	10%	250V	Polyes.	624 410 00
C40	1 uF	10%	100V	Polyes.	623 610 00
C41	10 nF	10%	250V	Polyes.	624 410 00
C42	82 pF	5%	400V	Cer.	605 182 00
C43	0.1 uF	10%	100V	Polyes.	623 510 00
C44-45	10 nF	10%	250V	Polyes.	624 410 00
C46	0.1 uF	10%	100V	Polyes.	623 510 00
C47	10 nF	10%	250V	Polyes.	624 410 00
C48	51 pF	5%	400V	Cer.	605 151 00
C49	10 nF	10%	250V	Polyes.	624 410 00
C50	22 nF	10%	250V	Polyes.	624 422 00
C51	47 nF	-20/+80%	16V	Cer.	601 447 00
210D 1-4	BB109G				833 010 90
D 5	IS920				830 192 00
D 6-7	BB109G				833 010 90
D 8	1S920				830 192 00

PARTS LIST

FOR

210

210D 9-10	BB109G				833 010 90
D11	1S920				830 192 00
D12-21	BB109G				833 010 90
D22-24	BA182				830 018 20
210IC1- 2	301A				850 030 10
IC3	74S132				857 413 20
210L 1- 2	220 uH	10%	RF-choke		740 222 00
L 3	22 uH	10%	RF-choke		740 122 00
L 4	10 uH	10%	RF-choke		740 110 00
L 5	2.2 uH	10%	RF-choke		740 022 00
L 6			Coil		105 219 42
L 7-8			Coil		105 219 51
L 9-11	100 uH	10%	RF-choke		740 210 00
L 12-13	10 uH	10%	RF-choke		740 110 00
210PL1					751 000 20
210R 1- 2	33 kohms	5%	1/3W	Car.	501 433 00
R 3	4.7 kohms	5%	1/3W	Car.	501 347 00
R 4	56 kohms	5%	1/3W	Car.	501 456 00
R 5	1 kohm	Var.			582 310 00
R 6	330 ohms	5%	1/3W	Car.	501 233 00
R 7	4.7 kohms	5%	1/3W	Car.	501 347 00
R 8	12 kohms	5%	1/3W	Car.	501 412 00
R 9-10	10 kohms	5%	1/3W	Car.	501 410 00
R11	6.8 kohms	5%	1/3W	Car.	501 368 00
R12-14	100 ohms	5%	1/3W	Car.	501 210 00
R15-16	1 kohm	5%	1/3W	Car.	501 310 00
R17-18	10 kohms	5%	1/3W	Car.	501 410 00
R19-20	2.2 kohms	5%	1/3W	Car.	501 322 00
R21-23	180 kohms	5%	1/3W	Car.	501 518 00
R24-26	820 kohms	5%	1/3W	Car.	501 582 00
R27	180 ohms	5%	1/3W	Car.	501 218 00
R28	270 ohms	5%	1/3W	Car.	501 227 00
R29-30	180 ohms	5%	1/3W	Car.	501 218 00
R31	470 ohms	5%	1/3W	Car.	501 247 00
R32	180 ohms	5%	1/3W	Car.	501 218 00

PARTS LIST

FOR

210

210R33	330 ohms	5%	1/3W	Car.	501 233 00
R34	10 kohms	5%	1/3W	Car.	501 410 00
R35	1 kohm	5%	1/3W	Car.	501 310 00
R36	1.2 kohms	5%	1/3W	Car.	501 312 00
R37	1 kohm	5%	1/3W	Car.	501 310 00
R38	12 ohms	5%	1/3W	Car.	501 112 00
R39	150 ohms	5%	1/3W	Car.	501 215 00
R40	56 kohms	5%	1/3W	Car.	501 456 00
R41	120 ohms	5%	1/3W	Car.	501 212 00
R42	120 ohms	5%	1/3W	Car.	501 212 00
R43	220 ohms	5%	1/3W	Car.	501 222 00
R44	1.2 kohms	5%	1/3W	Car.	501 312 00
R45	1.5 kohms	5%	1/3W	Car.	501 315 00
R46	6.8 kohms	5%	1/3W	Car.	501 368 00
R47	2.2 kohms	5%	1/3W	Car.	501 322 00
R48	10 ohms	5%	1/3W	Car.	501 110 00
R49	68 ohms	5%	1/3W	Car.	501 168 00
R50	330 ohms	5%	1/3W	Car.	501 233 00
R51	56 ohms	5%	1/3W	Car.	501 156 00
R52	100 ohms	5%	1/3W	Car.	501 210 00
R53	1.5 kohms	5%	1/3W	Car.	501 315 00

210TR1- 3	BFX 89	840 008 90
TR4	BC547B	840 054 70
TR5- 6	BC577	840 055 70
TR7- 9	E310	840 031 00
TR10	BC547B	840 054 70
TR11	BSX20	840 002 00
TR12	BF240	840 024 00
TR13	BFW17A	840 001 70
TR14	BSX20	840 002 00

PARTS LIST

FOR

211

211C 1	0.47 uF	10%	100V	Polyes.	623 547 00
C 2	1000 uF		10V	W.alum.	651 910 00
C 3	22 uF		16V	Tan	651 722 00
C 4- 7	47 nF	-20/+80%	16V	Cer.	601 447 00
C 8	0.1 uF	10%	100V	Polyes.	623 510 00
C 9	10 nF	10%	250V	Polyes.	624 410 00
C10	2.2 nF	1%	250V	Polyst.	614 322 00
C11	4.7 nF	-20/+80%	32V	Cer.	602 347 00
C12	100 uF		16V	W. alum.	651 810 00
211D 1- 2	1S920				830 192 00
211IC1	SN74148				857 414 81
IC2	uA7805				850 780 50
IC3	SN74LS93				850 749 32
IC4	NE555				850 055 50
IC5	SN74145				857 414 51
IC6- 7	SDA20				879 000 00
IC8	MAN82				824 008 20
IC9	74LS13				850 741 30
IC10	74LS74				850 747 40
IC11-13	MAN82				824 008 20
IC14	2003A				850 200 30
IC15	7448				850 744 80
IC16-17	MAN82				824 008 20
211L1	4.7 uH	10%	RF Choke		740 047 00
211ME1		1 mA 300 ohms			873 000 10
211R 1	2.7 kohms	5%	1/3W	Car.	501 327 00
R 2	1.8 kohms	5%	1/3W	Car.	501 318 00
R 3	2.2 ohms	5%	2W	WW	523 022 00
R 4	2.7 kohms	5%	1/3W	Car.	501 327 00
R 5- 6	1 kohm	5%	1/3W	Car.	501 310 00
R 7-10	4.7 kohms	5%	1/3W	Car.	501 347 00
R11	10 kohms	5%	1/3W	Car.	501 410 00
R12-14	4.7 kohms	5%	1/3W	Car.	501 347 00
R15	10 kohms	5%	1/3W	Car.	501 410 00
R16-19	4.7 kohms	5%	1/3W	Car.	501 347 00
R20	10 kohms	5%	1/3W	Car.	501 410 00
R21	1 kohm	5%	1/3W	Car.	501 310 00
R22	47 kohms	Var.		Log.	355 222 13
R23	2.2 kohms	5%	1/3W	Car.	501 322 00
R24-25	82 ohms	5%	1/3W	Car.	501 182 00

PARTS LIST

FOR

211

211R26-27	4.7 kohms	5%	1/3W	Car.	501 347 00
R28-33	82 ohms	5%	1/3W	Car.	501 182 00
R34	4.7 kohms	5%	1/3W	Car.	501 347 00
R35-40	1 kohm	5%	1/3W	Car.	501 310 00
R41-43	27 ohms	5%	1/3W	Car.	501 127 00
R44	1 kohm	5%	1/3W	Car.	501 310 00
R45-47	27 ohms	5%	1/3W	Car.	501 127 00
R48	1 kohm	5%	1/3W	Car.	501 310 00
R49	27 ohms	5%	1/3W	Car.	501 127 00
R50	68 ohms	5%	1/3W	Car.	501 168 00
211S 1- 3	M61-0110				763 000 07
S 4	M51-0136				763 000 08
S 5-	M61-0110				763 000 07
211SK1- 6	Socket				751 000 25
211SL1	7V	30 mA			
211TR1	BC558B				840 055 80
TR2- 5	BC547B				840 054 70
TR6-11	BC327				840 032 70
211TW1	Tuning Wheel				345 221 74

PARTS LIST

FOR

212

212C 1	4.7 nF	-20/+80%	32V	Cer.	602 347 00
C 2	10 nF	-20/+80%	32V	Cer.	602 410 00
C 3	4.7 nF	1%	125V	Polyst.	613 347 00
C 4	22 uF		16V	Tan.	651 722 00
C 5	1.8 nF	1%	250V	Polyst.	614 318 00
C 6-14	47 nF	-20/+80%	16V	Cer.	601 447 00
C15	100 pF	1%	500V	Polyst.	615 210 00
C16-35	1 nF	-20/+80%	25V	Cer.	602 310 00
C36	4.7 nF	-20/+80%	32V	Cer.	602 347 00
C37	470 uF		6.3V	W.alum.	650 847 00
C38	15 nF	1%	63V	Polyst.	612 415 00
C39	390 PF	1%	500V	Polyst.	615 239 00
212D 1- 3	AAZ17				830 001 70
212IC1	74LS08				850 740 80
IC2	7404				850 740 40
IC3	74LS05				850 740 51
IC4	74LS123				857 412 30
IC5	74LS09				850 740 90
IC6 - 7	74LS00				850 740 02
IC8 - 9	74LS32				850 743 20
IC10-15	74LS168				857 416 80
IC16	74LS32				850 743 20
IC17	74LS08				850 740 80
IC18	74LS32				850 743 20
IC19-20	74LS08				850 740 80
IC21	74LS32				850 743 20
IC22	74LS08				850 740 80
IC23	74LS32				850 743 20
IC24	74LS08				850 740 80
IC25-28	74LS151				857 415 10
IC29	74LS74				850 747 40
IC30	7409A				850 740 91
IC31	74LS05				850 740 51
212PL1	64 Way				751 000 22

PARTS LIST

FOR

212

212R 1	100 ohms	5%	1/3W	Car.	501 210 00
R 2	470 ohms	5%	1/3W	Car.	501 247 00
R 3- 7	1 kohm	5%	1/3W	Car.	501 310 00
R 8	1.8 kohms	5%	1/3W	Car.	501 318 00
R 9	4.7 kohms	5%	1/3W	Car.	501 347 00
R10	10 kohms	5%	1/3W	Car.	501 410 00
R11	27 kohms	5%	1/3W	Car.	501 427 00
R12-13	10 kohms	5%	1/3W	Car.	501 410 00
R14	2.7 kohms	5%	1/3W	Car.	501 327 00
R15	3.3 kohms	5%	1/3W	Car.	501 333 00
R16	1.5 kohms	5%	1/3W	Car.	501 315 00
R17	18 kohms	5%	1/3W	Car.	501 418 00
R18	10 kohms	5%	1/3W	Car.	501 410 00

PARTS LIST

FOR

213

213C 1	0.68 uF	10%	100V	Polyes.	623 568 00
C 2	0.47 uF	10%	250V	Polyes.	624 547 00
C 3	0.1 uF	10%	250V	Polyes.	624 510 00
C 4	1000 uF		25V	W.alum.	652 910 00
C 5	2200 uF		40V	W.alum.	652 922 00
C 6	39 pF	5%	400V	Cer.	605 139 00
C 7	0.1 uF	10%	250V	Polyes.	624 510 00
C 8	0.68 uF	10%	100V	Polyes.	623 568 00
C 9-10	0.01 uF	10%	250V	Polyes.	624 410 00
C11-12	39 pF	5%	400V	Cer.	605 139 00
C13	18 pF	5%	400V	Cer.	605 118 02
C14	27 pF	5%	400V	Cer.	605 127 02
213IC1-2	7812				850 781 20
IC3	7805				850 780 50
213L1-4	25 uH		RF Choke		740 125 00
L5	100 uH	10%	RF Choke		740 210 00
L6-8	25 uH		RF Choke		740 125 00
L9-10	22 uH	10%	RF Choke		740 122 00
L11			Coil		105 216 21
L12			Coil		105 216 11
L13			Coil		105 216 21
213PL1	12 Way				751 000 27
213R1	2.2 kohms	5%	1/3W	Car.	501 322 00
R2	33 kohms	5%	1/3W	Car.	501 433 00
213SK1-3					750 000 10

PARTS LIST

FOR

214

214C 1- 2	47 nF	-20/+80%	16V	Cer.	601 447 00
214IC1	74S196				857 419 60
214L 1	220 uH	10%	RF Choke		740 222 00
214R 1	1 kohm	5%	1/3W	Car.	501 310 00
R 2	1.5 kohms	5%	1/3W	Car.	501 315 00

PARTS LIST

FOR

280

280C1	47 nF	10%	250V	Polyes.	624 447 00
C2	1 uF	10%	250V	Polyes.	624 610 00
C3	47 nF	10%	250V	Polyes.	624 447 00
280D1	BZY93C33R	Zener			832 933 00
280FS1	2.5A	Fast	6.3 x 32 mm		720 231 50
FS2	1A	Fast	6.3 x 32 mm		720 310 00
280PL1		BNC			374 208 52
280S1		Power			762 000 00
280SK1		Amp			772 000 12
SK2		UHF SO239			750 000 01
SK3		12 Way			751 000 29
280T1		Converter			384 209 03
280TR1-2	2N6254				842 625 40
TR3	BD234-10				842 023 40
TR4-5	2N3055				842 305 50
280TS1		18 Way			770 000 04

994 210 7 3

PARTS LIST

FOR

281

281C 1- 2	0.1 uF	10%	250V	Polyes.	624 510 00
C 3	470 uF		40V	W.alum.	652 847 00
C 4- 6	1 uF	10%	250V	Polyes.	624 610 01
C 7	47 nF	10%	250V	Polyes.	624 447 00
C 8	0.1 uF	10%	250V	Polyes.	624 510 00
C 9	47 nF	10%	250V	Polyes.	624 447 00
C10	2200 uF		40V	W.alum.	652 922 00
C11	47 nF	10%	250V	Polyes.	624 447 00
C12-14	0.1 uF	10%	250V	Polyes.	624 510 00
C15	100 uF		25V	W.alum.	652 810 00
C16	4700 uF		25V	W.alum.	652 947 01
C17	100 uF		16V	W.alum.	651 810 00
281D 1	1S920				830 192 00
D 2	1N5401				831 540 10
D 3	1S920				830 192 00
D 4	1N5401				831 540 10
D 5- 6	1S920				830 192 00
D 7- 8	1N5401				831 540 10
D 9-10	BZX79B7V5	Zener			832 797 50
D11	BZX79B6V8	Zener			832 796 81
281L 1- 2	25 uH	RF-Choke			740 125 00
281R 1	220 kohms	5%	1W	Car.	504 522 00
R 2	12 ohms	5%	3/4W	Car.	503 112 00
R 3	1.5 kohms	5%	1W	Car.	504 315 00
R 4	220 kohms	5%	1/3W	Car.	501 522 00
R 5	27 ohms	5%	1/3W	Car.	501 127 00
R 6	100 ohms	5%	1/3W	Car.	501 210 00
R 7	4.7 kohms	5%	1/3W	Car.	501 347 00
R 8	1.2 kohms	5%	1/3W	Car.	501 312 00
R 9	220 ohms	5%	5W	WW	527 222 00
R10	10 kohms	5%	1/3W	Car.	501 410 00
R11	100 ohms	5%	1/2W	Car.	501 210 00
R12-13	4.7 kohms	5%	1/3W	Car.	501 347 00
R14	100 ohms	5%	1/2W	Car.	501 210 00
R15	15 ohms	5%	1/2W	Car.	502 115 00
R16	220 ohms	5%	5W	WW	527 222 00

PARTS LIST

FOR

281

281R17	10 kohms	5%	1/3W	Car.	501 410 00
R18	1 ohm	5%	5W	WW	527 010 01
R19	4.7 kohms	5%	1/3W	Car.	501 347 00
R20	150 ohms	5%	1/2W	Car.	502 215 00
R21	68 ohms	5%	1/3W	Car.	501 168 00
R22	82 ohms	5%	3W	WW	526 182 00
R23	68 ohms	5%	1/2W	Car.	502 168 00
R24	68 ohms	5%	1/3W	Car.	501 168 00
281RL1		1 breake, 24 V Coil			780 000 20
281TR1	2N6027				844 602 70
TR2- 3	BC337-25				840 033 70
TR4	BD135-10				842 013 50
TR5	BC337-25				840 033 70

PARTS LIST

FOR

283

283FS1	1A	Slow	6.3 x 32 mm	720 310 00
FS2	110V 0.63A 220V 0.315A	Fast	6.3 x 32 mm	720 263 00 720 231 51
283PL1		BNC		374 208 52
283S1				764 000 02
S2				262 000 00
283SK1		Amp		772 000 12
SK2		UHF S0239		751 000 01
SK3		12 Way		751 000 29
283T1		Main		384 209 11
283TR1	BD234-10			842 023 40
TR2	2N3055			842 305 50
283 TS1		18 Way		770 000 04

994 210 82

PARTS LIST

FOR

284

284C1-2	47 nF	10%	630V	Polyes.	626 447 00
C3-4	0.47 uF	10%	630V	Polyes.	626 547 00
C5	0.1 uF	10%	250V	Polyes.	624 510 00
C6	2200 uF		40V	W.alum.	652 922 00
C7-9	0.1 uF	10%	250V	Polyes.	624 510 00
C10	100 uF		25V	W.alum.	652 810 00
C11	4700 uF		25V	W.alum.	652 947 01
C12	100 uF		25V	W-alum.	652 810 00
284D1-2	1N5401				831 540 10
D3-4	1S920				830 192 00
D5-6	BZX79 B7V5	Zener			832 797 50
D7-8	1N5401				831 540 10
D9	BZX79 B6V8	Zener			832 796 81
284L1-2	25 uH	RF Choke			740 125 00
284R1	1.5 kohms	5%	1W	Car.	504 315 00
R2	15 ohms	5%	1/3W	Car.	501 115 00
R3	10 kohms	5%	1/3W	Car.	501 410 00
R4	150 ohms	5%	1/2W	Car.	502 215 00
R5	68 ohms	5%	1/3W	Car.	501 168 00
R6	82 ohms		3W	WW	526 182 00
R7	68 ohms	5%	1/2W	Car.	502 168 00
R8	68 ohms	5%	1/3W	Car.	501 168 00
284RL1		1 Break 24V Coil			780 125 21
284TR1	BD135-10				842 013 50
TR2	BC337-25				840 033 70

994 210 8 2

PARTS LIST

FOR

286

286C1	1u	10%	250V	Polyes	624 610 00
C2-3	47nF	10%	250V	Polyes.	624 447 00
286D1	BZY93C33R	Zener			832 933 00
D2	MV 5353				823 000 01
286FS1	1A	Fast	6.3 x 32 mm		720 310 00
FS2	2.5A	Fast	6.3 x 32 mm		720 325 00
FS3	0.63A/110V	Slow	6.3 x 32 mm		720 263 00
FS3	0.315A/220V	Slow	6.3 x 32 mm		720 231 51
286PL1		BNC			374 208 52
286R1	56 ohms		3W	WW	526 156 00
R2	3.3 kohms	5%	1/3W	Car.	502 333 00
286S1		Safety			764 000 02
S2		Mains			762 000 00
286SK1		Amp			772 000 12
SK2		UHF SO239			750 000 01
SK3		12 Way			751 000 29
286T1		Mains			384 209 11
T2		Converter			384 209 03
286TR1-2	2N6254				842 625 40
TR3	2N3055				842 305 50
TR4	BD23410				842 023 40
TR5	2N3055				842 305 50
286TS1		18 Way			770 000 04

PARTS LIST

FOR

287

287C1-2	47 nF	10%	630V	Polyes.	626 447 00
C3-4	0.1 uF	10%	250V	Polyes.	624 510 00
C5	0.47 uF	10%	630V	Polyes.	626 547 00
C6	1 uF	10%	100V	Polyes.	623 610 01
C7-14	0.1 uF	10%	250V	Polyes.	624 510 00
C15	0.47 uF	10%	630V	Polyes.	626 547 00
C16	1 uF	10%	100V	Polyes.	623 610 00
C17	4700 uF		25V	W.alum.	652 947 01
C18	2200 uF		40V	W.alum.	652 922 00
C19	470 uF		40V	W.alum.	652 847 00
C20-21	1 uF	10%	100V	Polyes.	623 610 00
C22-24	47 nF	10%	250V	Polyes.	624 447 00
C25	1 uF	10%	100V	Polyes.	623 610 00
C26	100 uF		25V	W.alum.	652 810 00
C27	100 uF		25V	W.alum.	652 810 00
287D1-8	1N5401				831 540 10
D9-15	1S920				830 192 00
D16	BZX79 B6V8	Zener			832 796 81
D17-18	BZX79 B7V5	Zener			832 797 50
287L1-4	25uH	RF Choke			740 125 00
287R1	220 kohms	5%	1W	Car.	504 522 00
R2	1.5 kohms	5%	1W	Car.	504 315 00
R3	220 ohms	5%	5W	WW	527 222 00
R4	10 kohms	5%	1/3W	Car.	501 410 00
R5	12 ohms	5%	3/4W	Car.	503 112 00
R6	12 kohms	5%	1/3W	Car.	501 412 00
R7	100 ohms	5%	1/2W	Car.	502 210 00
R8	4.7 kohms	5%	1/3W	Car.	501 347 00
R9-10	1 kohm	5%	1/3W	Car.	501 310 00
R11	220 kohms	5%	1/3W	Car.	501 522 00
R12	27 ohms	5%	1/3W	Car.	501 127 00
R13	1 kohm	5%	1/3W	Car.	501 310 00
R14	4.7 kohms	5%	1/3W	Car.	501 347 00
R15	10 kohms	5%	1/3W	Car.	501 410 00
R16	10 kohms	5%	1/3W	Car.	501 410 00
R17	4.7 kohms	5%	1/3W	Car.	501 347 00
R18	1.2 kohm	5%	1/3W	Car.	501 312 00
R19	100 ohms	5%	1/2W	Car.	502 210 00
R20	10 kohms	5%	1/3W	Car.	501 410 00
R21	220 ohms	5%	5W	WW	527 220 00

994 210 92

PARTS LIST

FOR

287

287R22	10 kohms	5%	1/3W	Car.	501 410 00
R23	120 ohms	5%	1/2W	Car.	502 212 00
R24	4.7 kohms	5%	1/3W	Car.	501 347 00
R25	68 ohms	5%	1/2W	Car.	502 168 00
R26	10 ohms	5%	1/2W	Car.	502 410 00
R27	68 ohms	5%	1/2W	Car.	502 168 00
R28	1 ohm	5%	6W	WW	527 010 01
R29	150 ohms	5%	1/2W	Car.	502 215 00
R30	82 ohms	5%	3W	WW	526 182 00
R31	68 ohms	5%	1/2W	Car.	502 168 00
287RL1	24 VOLTS COIL, 1 CHANGE OVER				780 000 21
RL2	12 VOLTS COIL, 1 CHANGE OVER				780 000 19
287TR1	BC337-25				846 033 70
TR2-3	BC557B				840 055 70
TR4	2N6027				844 602 70
TR5	BC337-25				846 033 70
TR6	BC547B				840 054 70
TR7	BC337-25				846 033 70
TR8	BC135-10				842 013 50

994 210 91

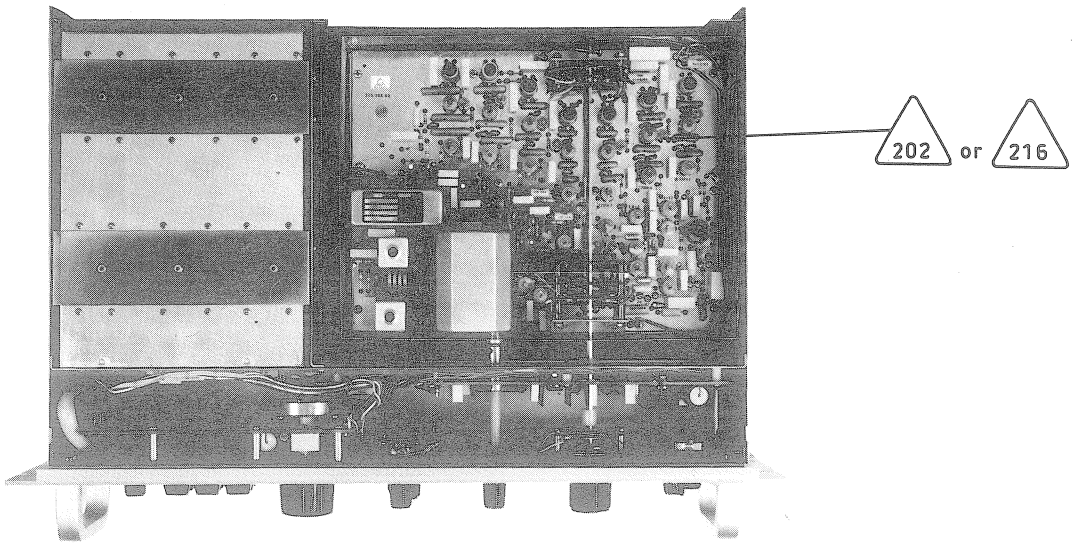

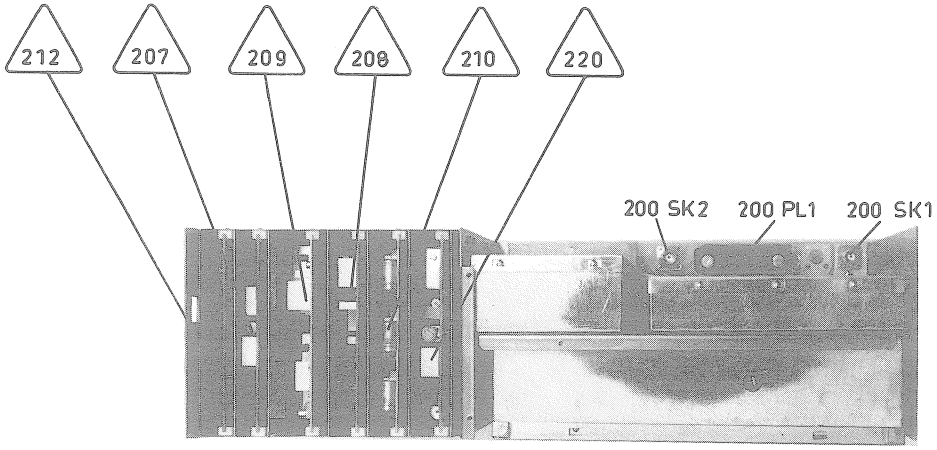

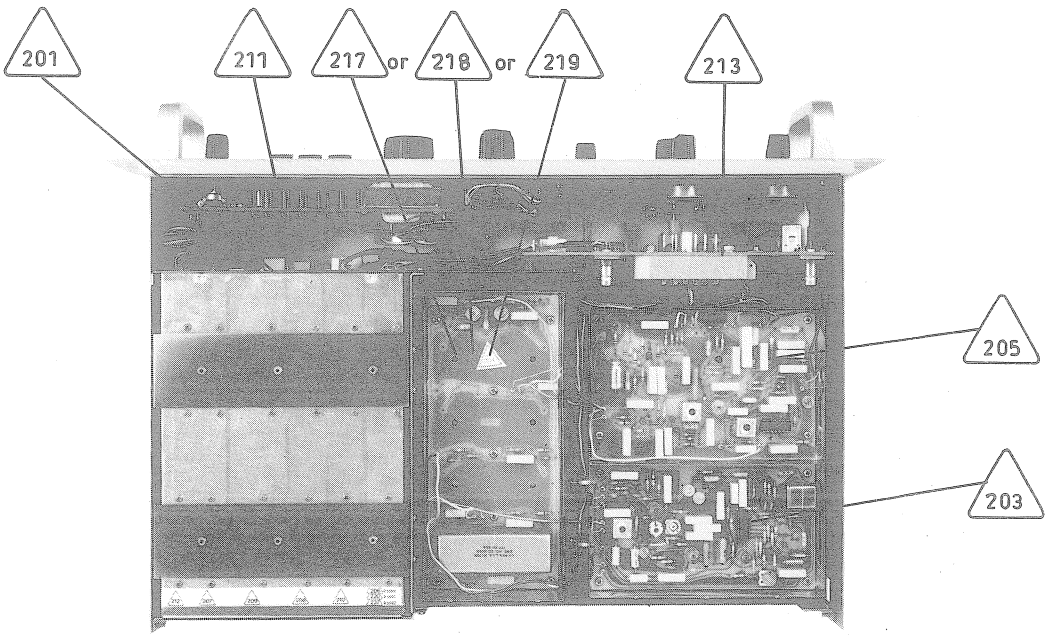

LOCATION OF CIRCUIT BOARDS
RECEIVER R5001

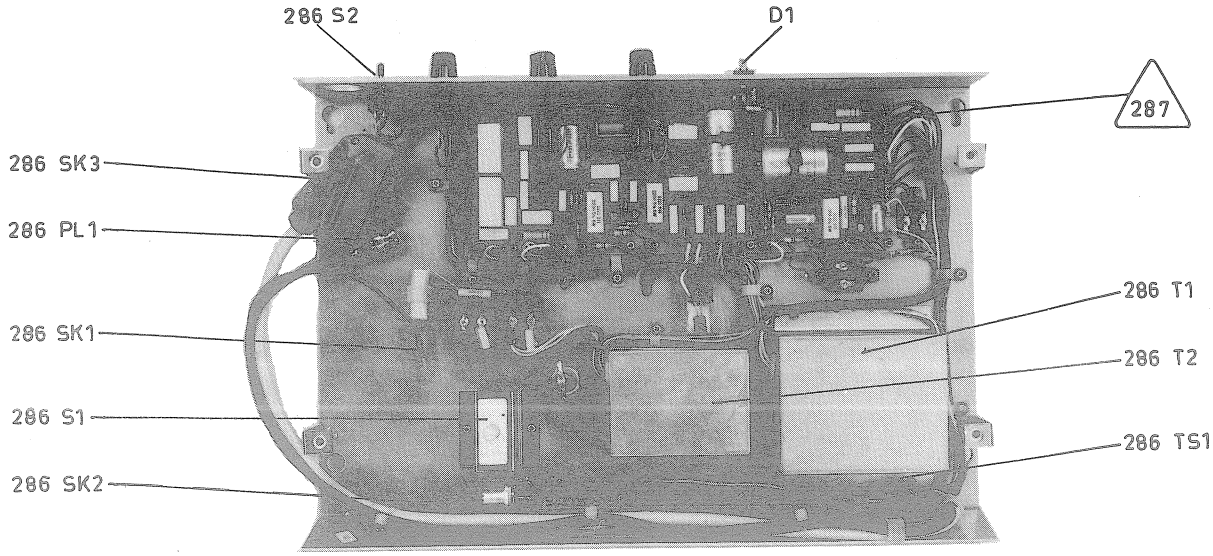

DC/AC POWER PACK P5012

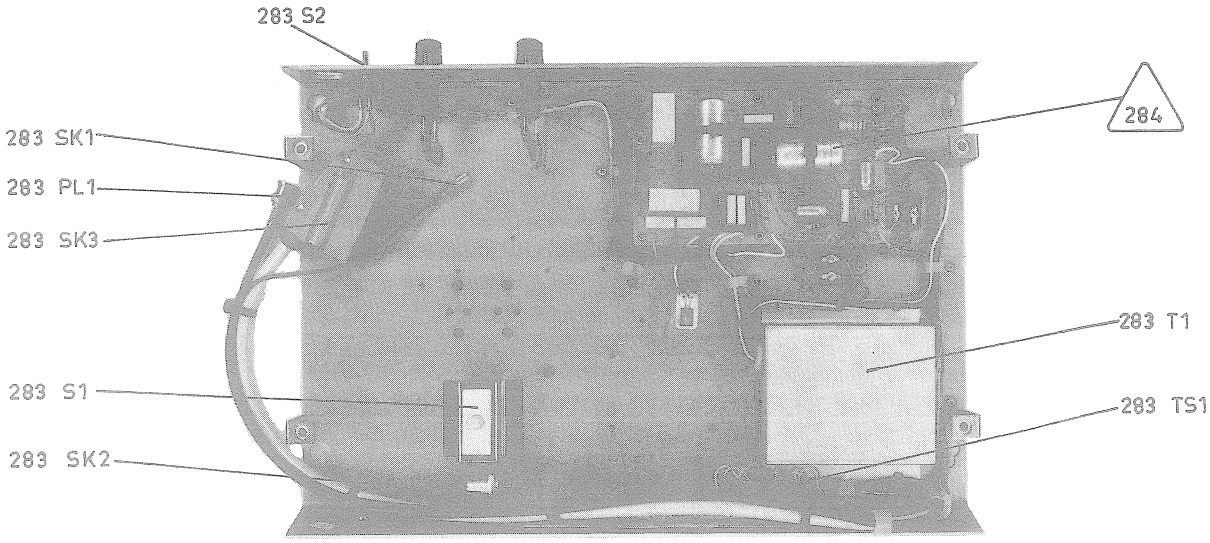

AC POWER PACK P5011

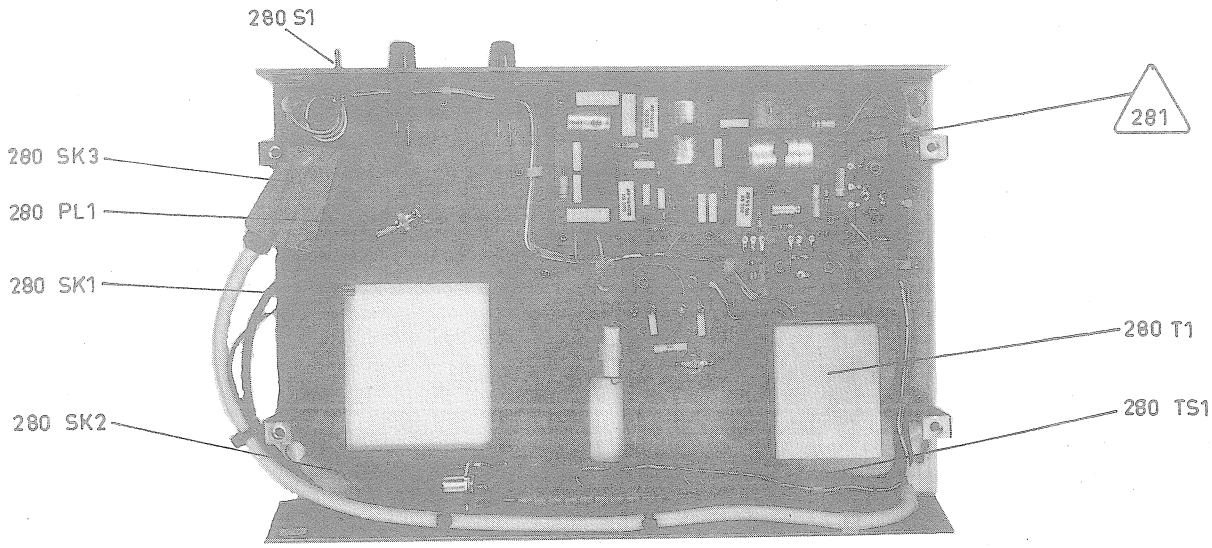

DC POWER PACK P5010

LOCATION OF CIRCUIT BOARDS
POWER PACK P5010, P5011 AND P5012

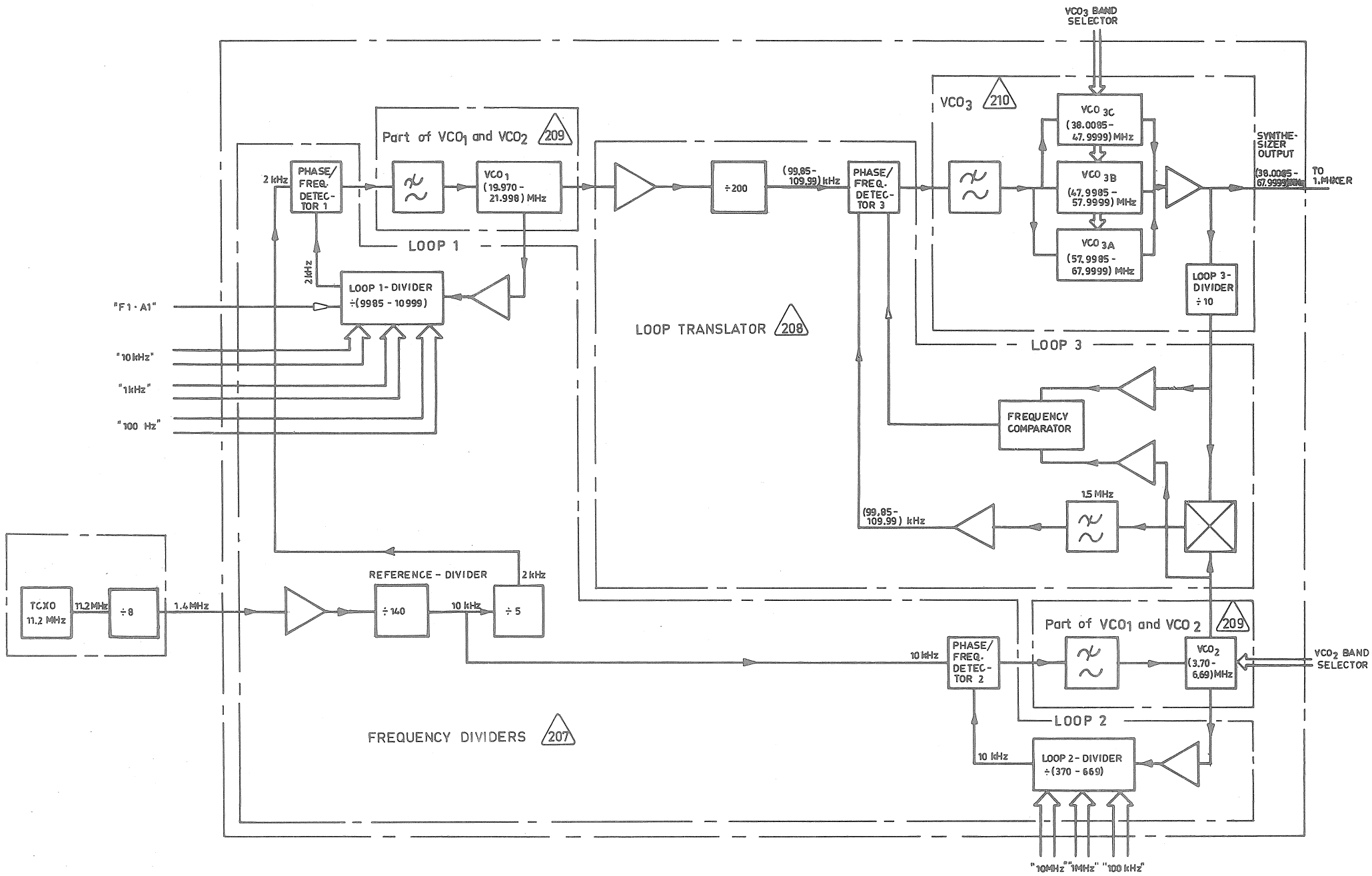

BLOCK DIAGRAM, FREQUENCY SYNTHESIZER

995 202 62

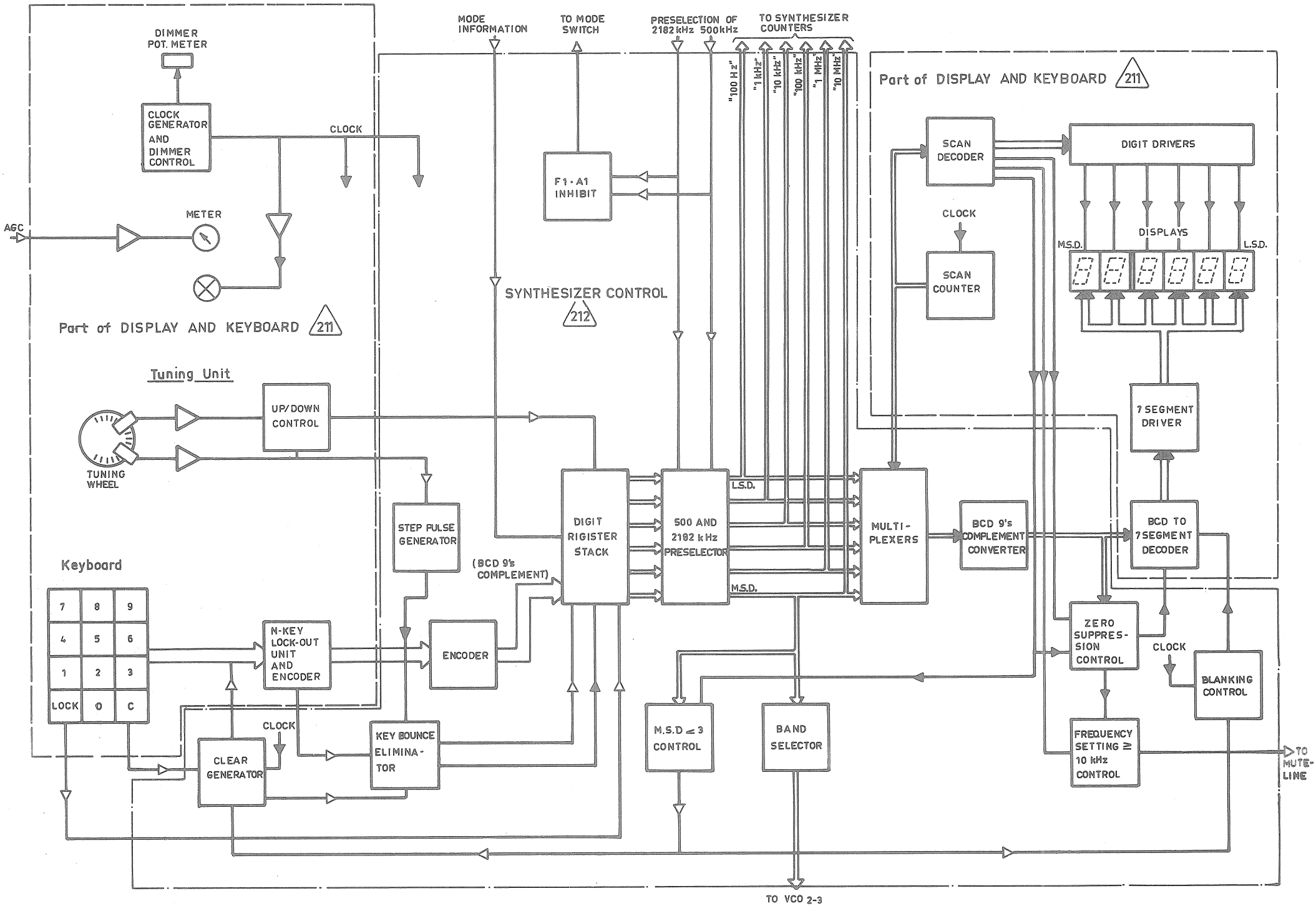

BLOCK DIAGRAM, FREQUENCY SELECTION

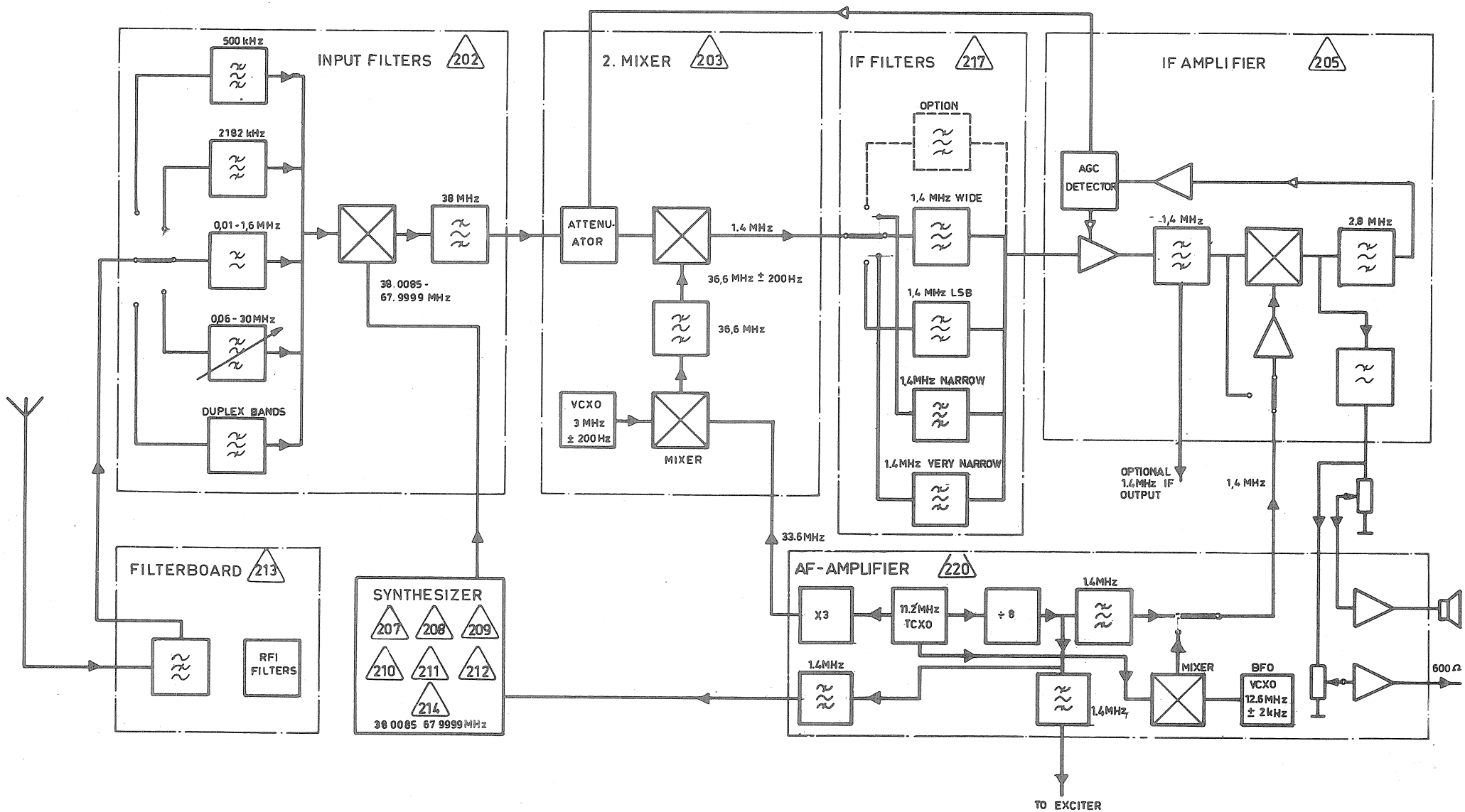

995 202 92

BLOCK DIAGRAM, SIGNAL PATH

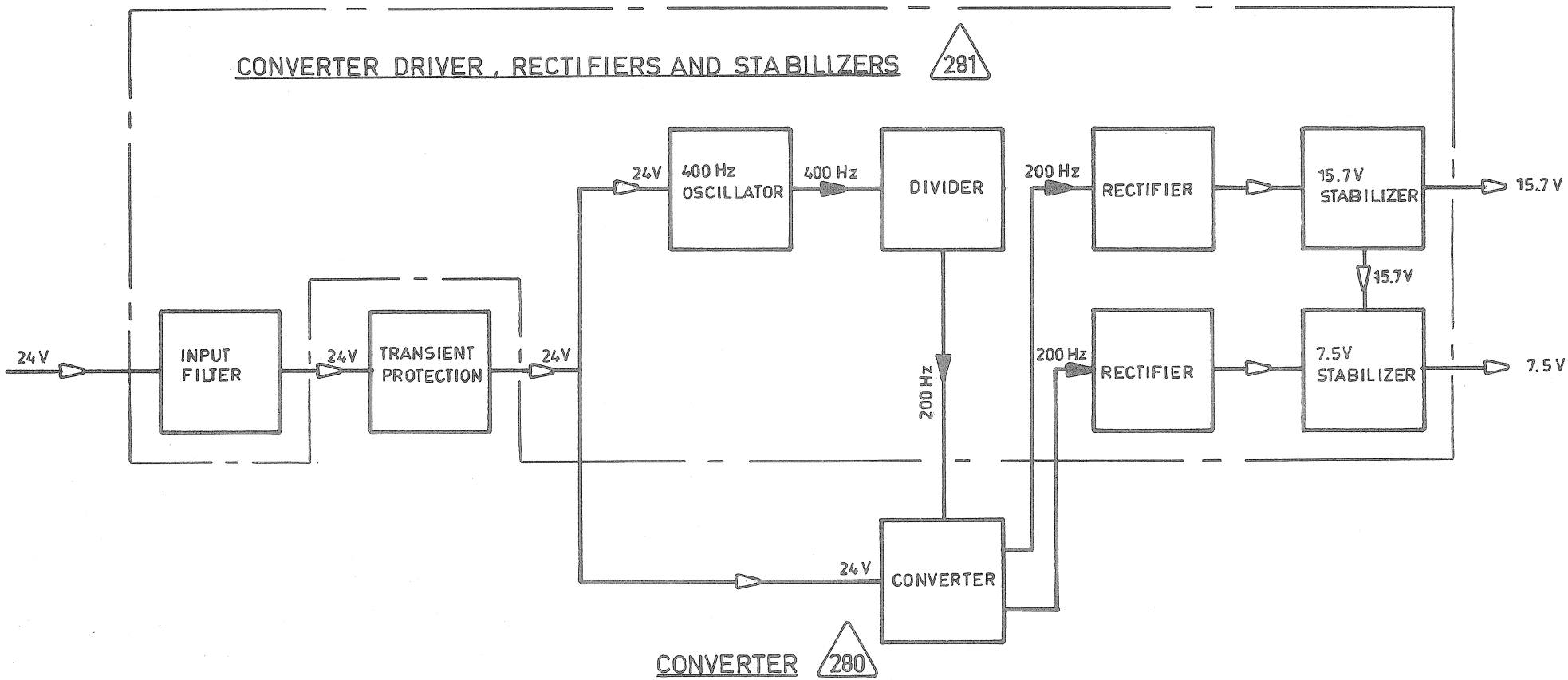

BLOCK DIAGRAM , P5010 24V DC POWER PACK

994 211 02

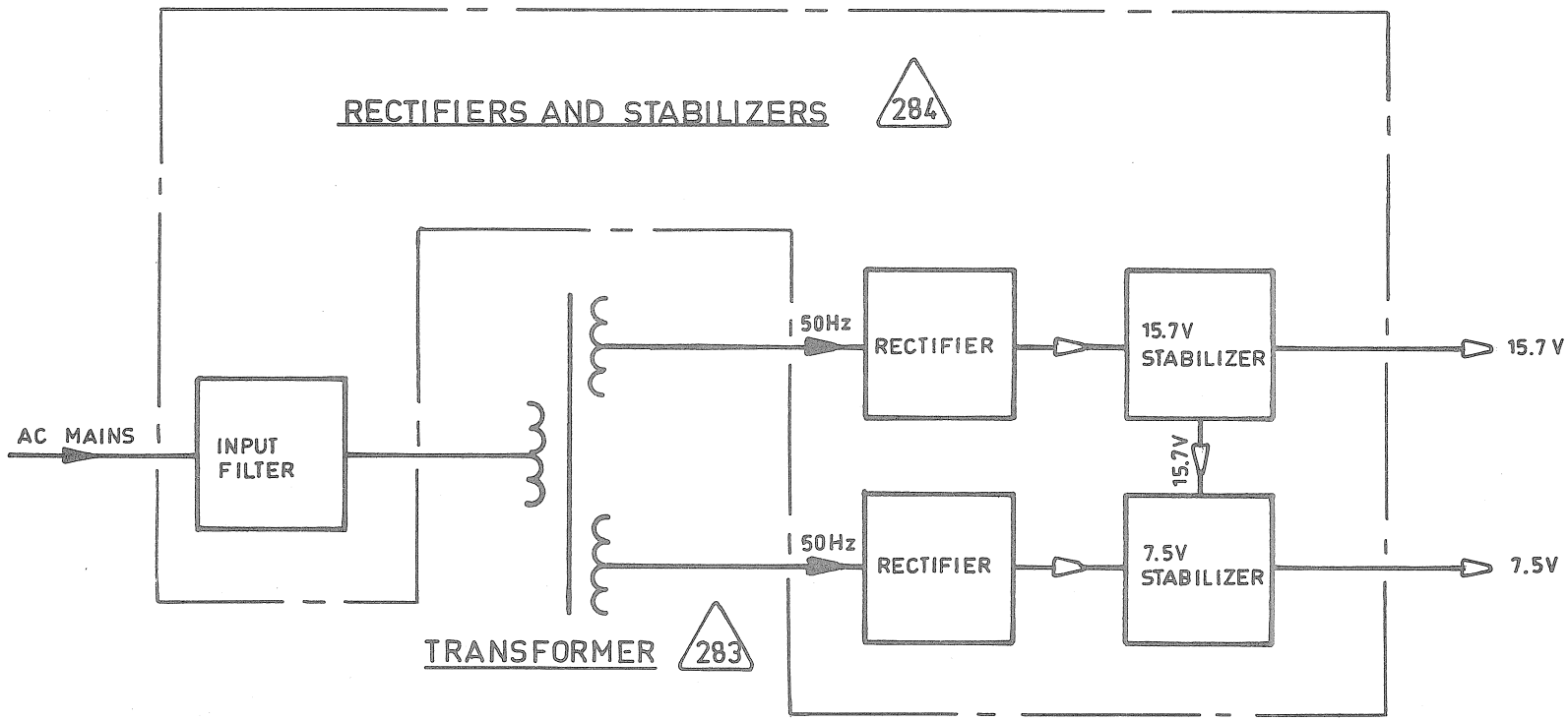

994 211 12

BLOCK DIAGRAM, P5011 AC POWER PACK

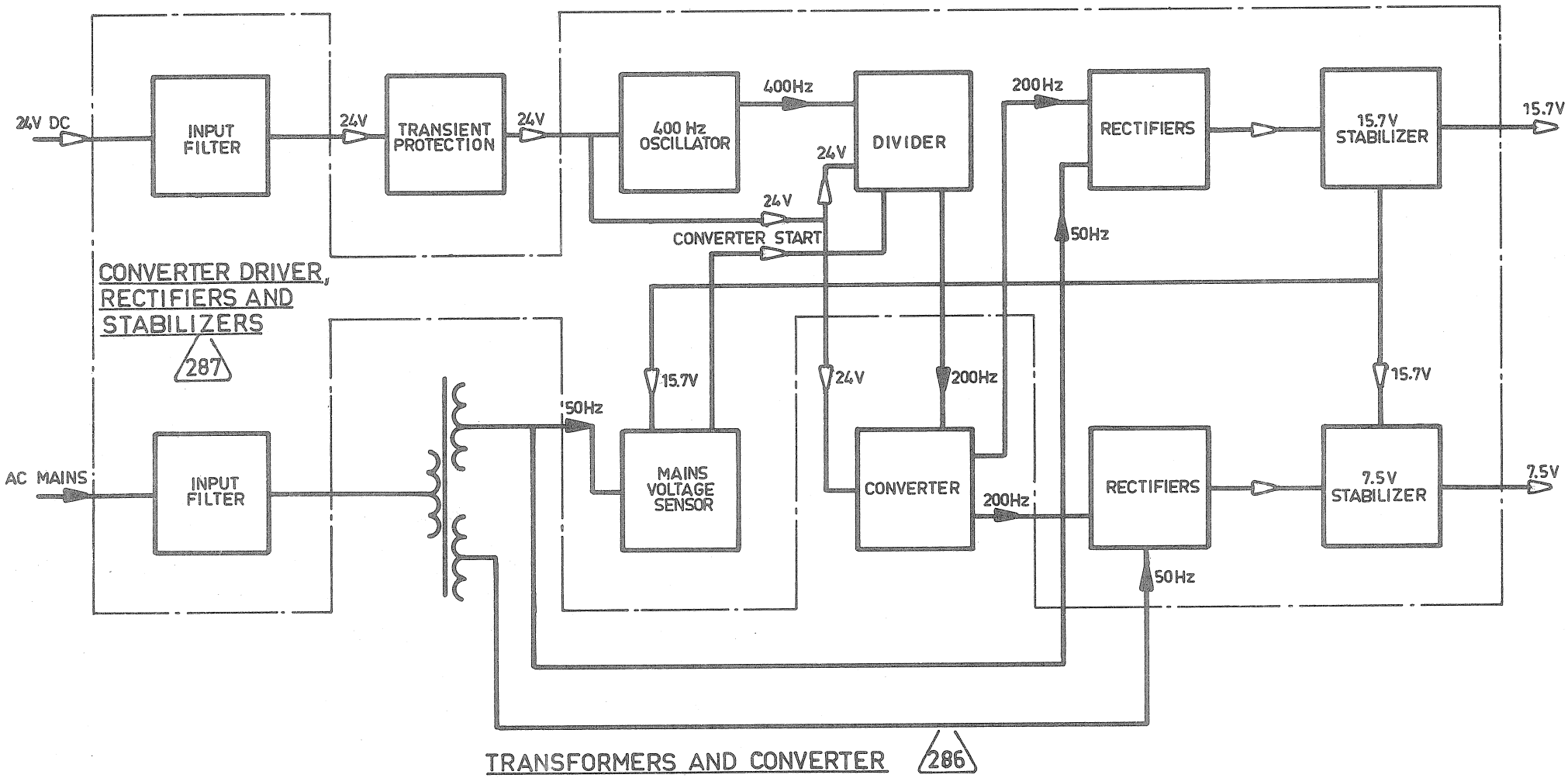

BLOCK DIAGRAM, P5012 24 DC/AC POWER PACK

994 211 23

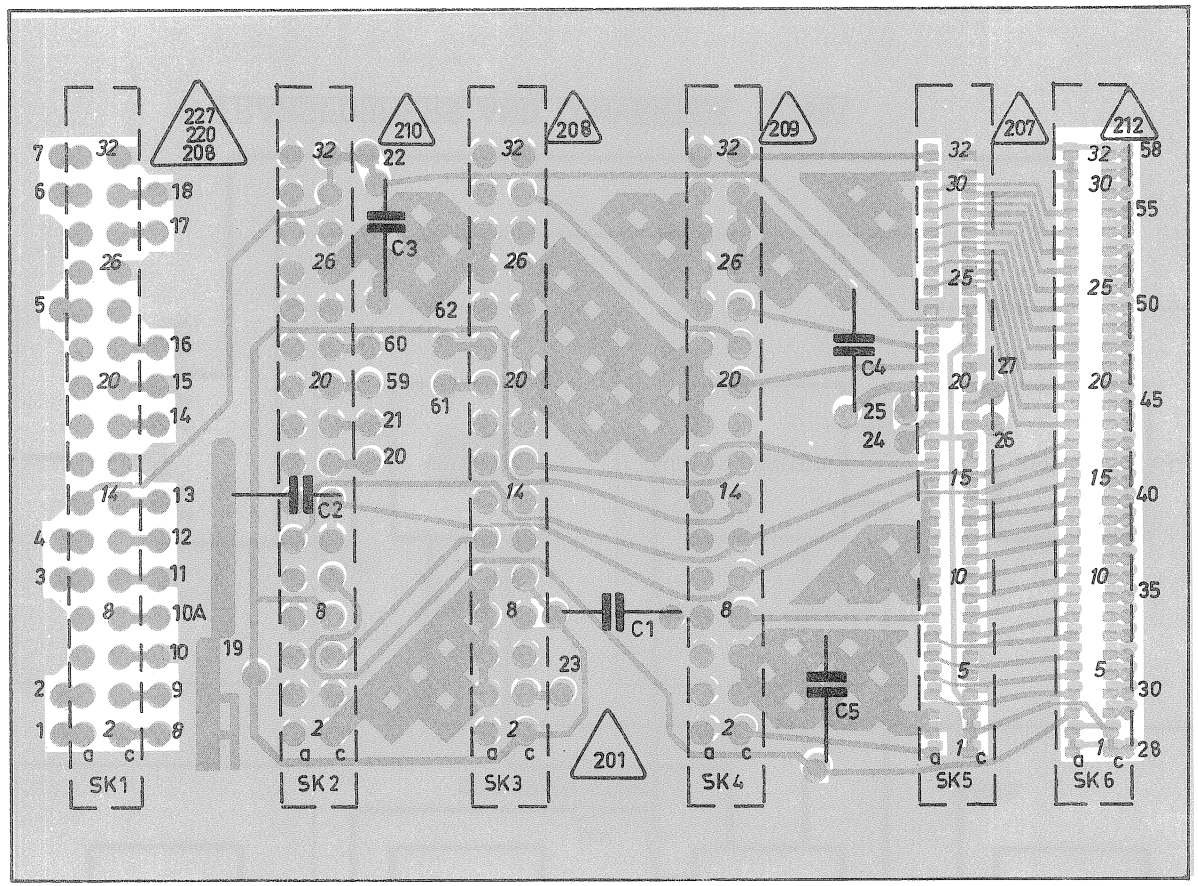

PRINTED CIRCUIT BOARD 201
VIEWED FROM SOLDER SIDE

995 204 31

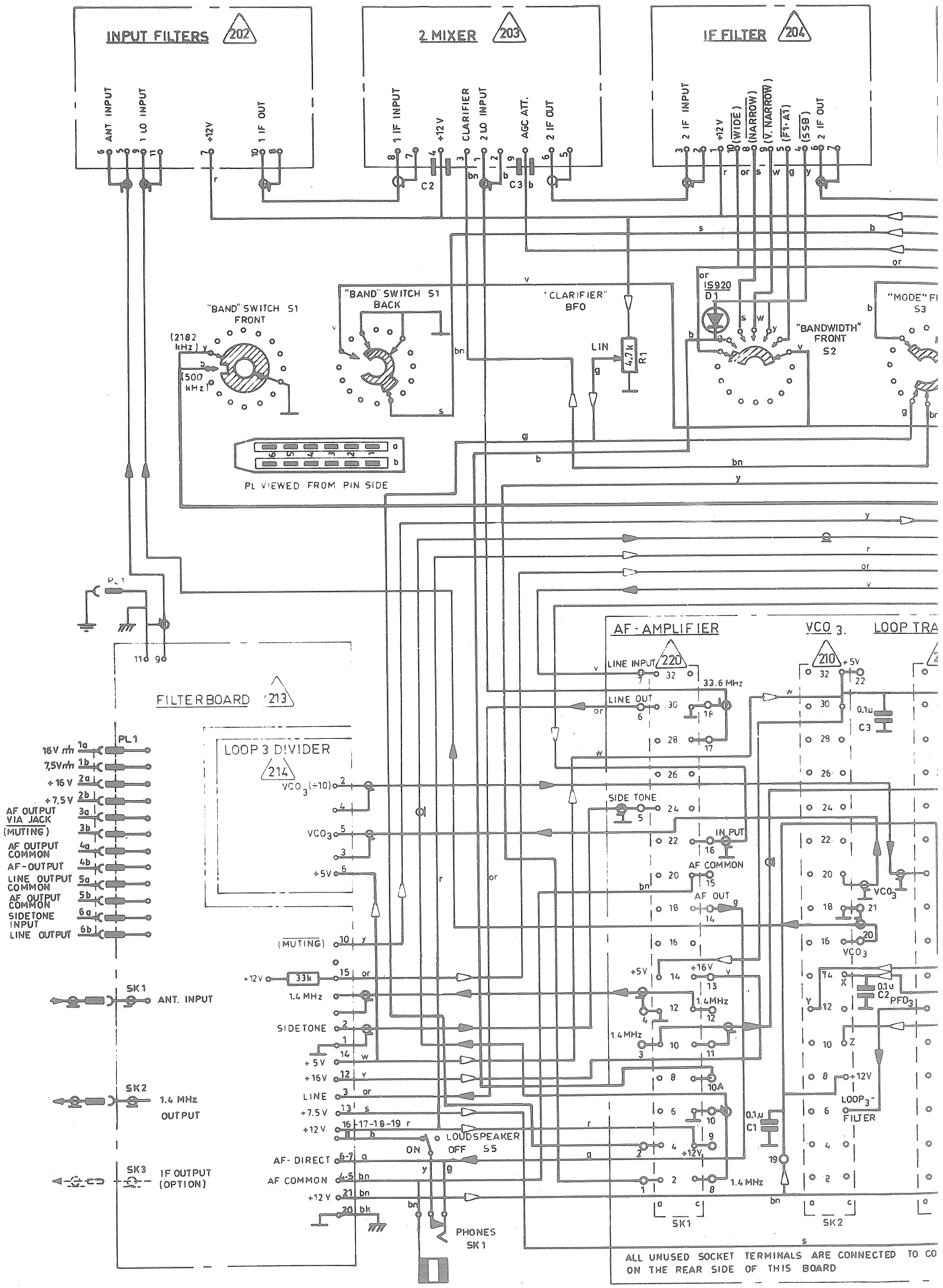
INPUT FILTERS 202
2. MIXER 203
IF FILTER 204
ANT INPUT
1 LO INPUT
+12V
1 IF OUT
1 IF INPUT
CLARIFIER
2 LO INPUT
AGC ATT.
2 IF OUT
2 IF INPUT
(WIDE)
(NARROW)
(V. NARROW)
(F1-A1)
(SSB)
"BAND" SWITCH S1 FRONT
(2182 kHz)
(500 kHz)
"BAND" SWITCH S1 BACK
"CLARIFIER" BFO
LIN
4.7k
R1
IS920
D1
"BANDWIDTH" FRONT S2
"MODE" F
S3
PL VIEWED FROM PIN SIDE
PL1
FILTERBOARD 213
LOOP 3 DIVIDER 214
16V
7,5V
+16 V
+7.5 V
AF OUTPUT VIA JACK (MUTING)
AF OUTPUT COMMON
AF-OUTPUT
LINE OUTPUT COMMON
AF OUTPUT COMMON
SIDETONE INPUT
LINE OUTPUT
SK1
ANT. INPUT
SK2
1.4 MHz OUTPUT
SK3
IF OUTPUT (OPTION)
VCO3 (÷10)
VCO3
+5V
(MUTING)
+12V
33k
1.4 MHz
SIDETONE
+5V
+16V
LINE
+7.5V
+12V
AF-DIRECT
AF COMMON
+12V
LOUDSPEAKER
ON
OFF
S5
PHONES SK1
AF-AMPLIFIER
LINE INPUT 220
LINE OUT
SIDE TONE
IN PUT
AF COMMON
AF OUT
33.6 MHz
VCO 3
210
LOOP TRA
C3
C2
PFD3
LOOP3-FILTER
C1
SK1
SK2
ALL UNUSED SOCKET TERMINALS ARE CONNECTED TO CO
ON THE REAR SIDE OF THIS BOARD

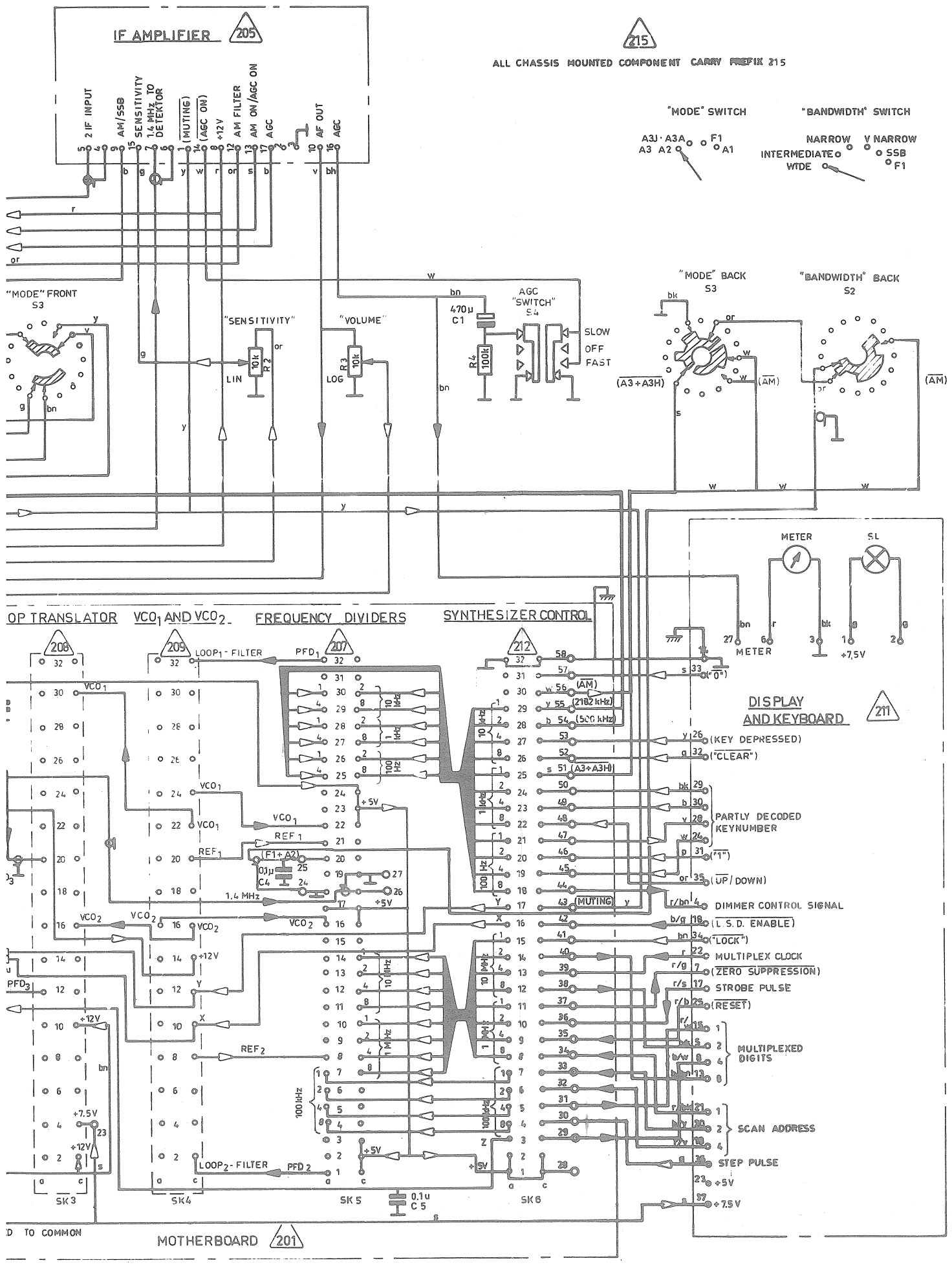

R5001 WIRING DIAGRAM 215

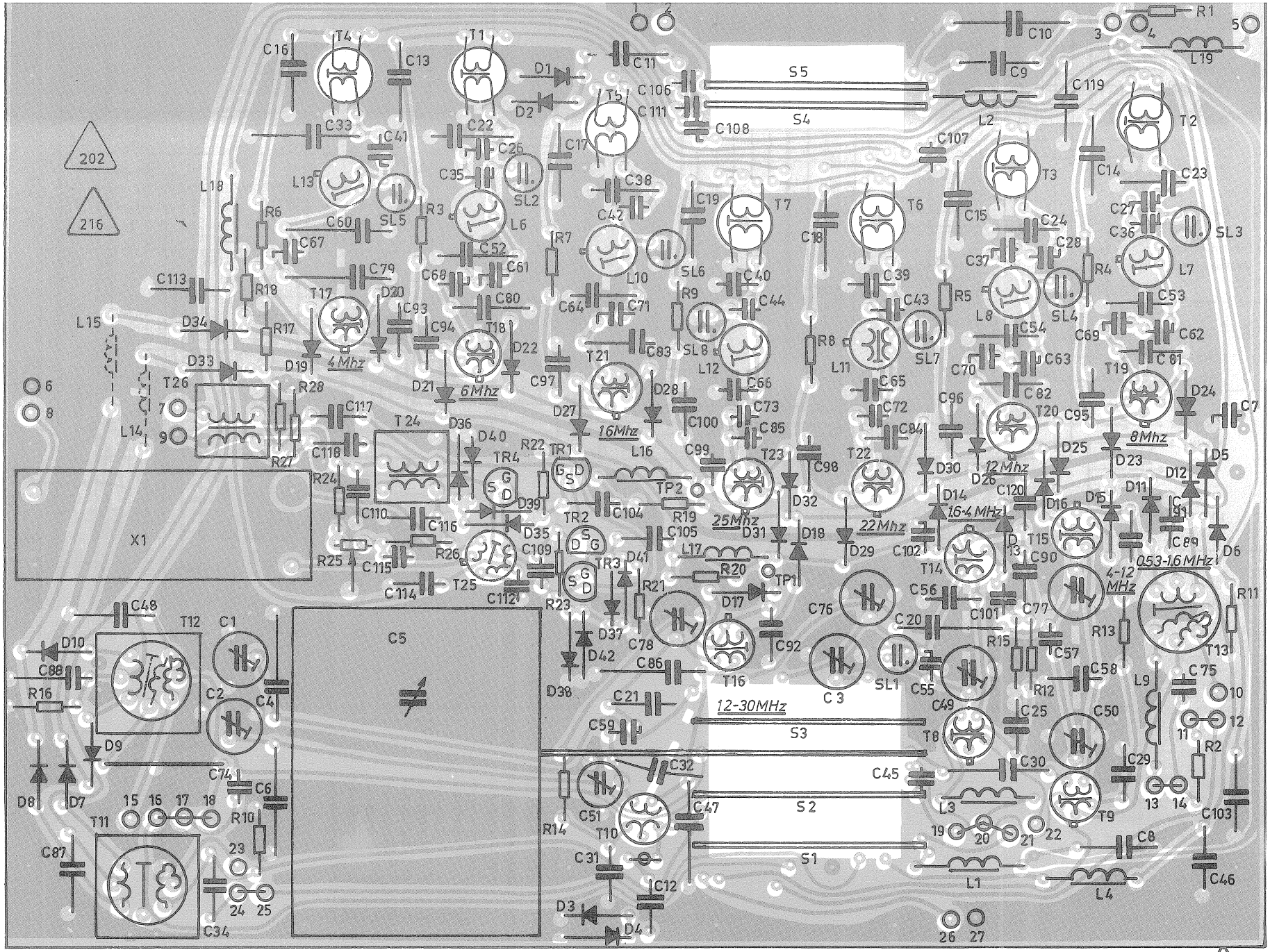

PRINTED CIRCUIT BOARD 202 or 216
VIEWED FROM COMPONENT SIDE

995 204 81

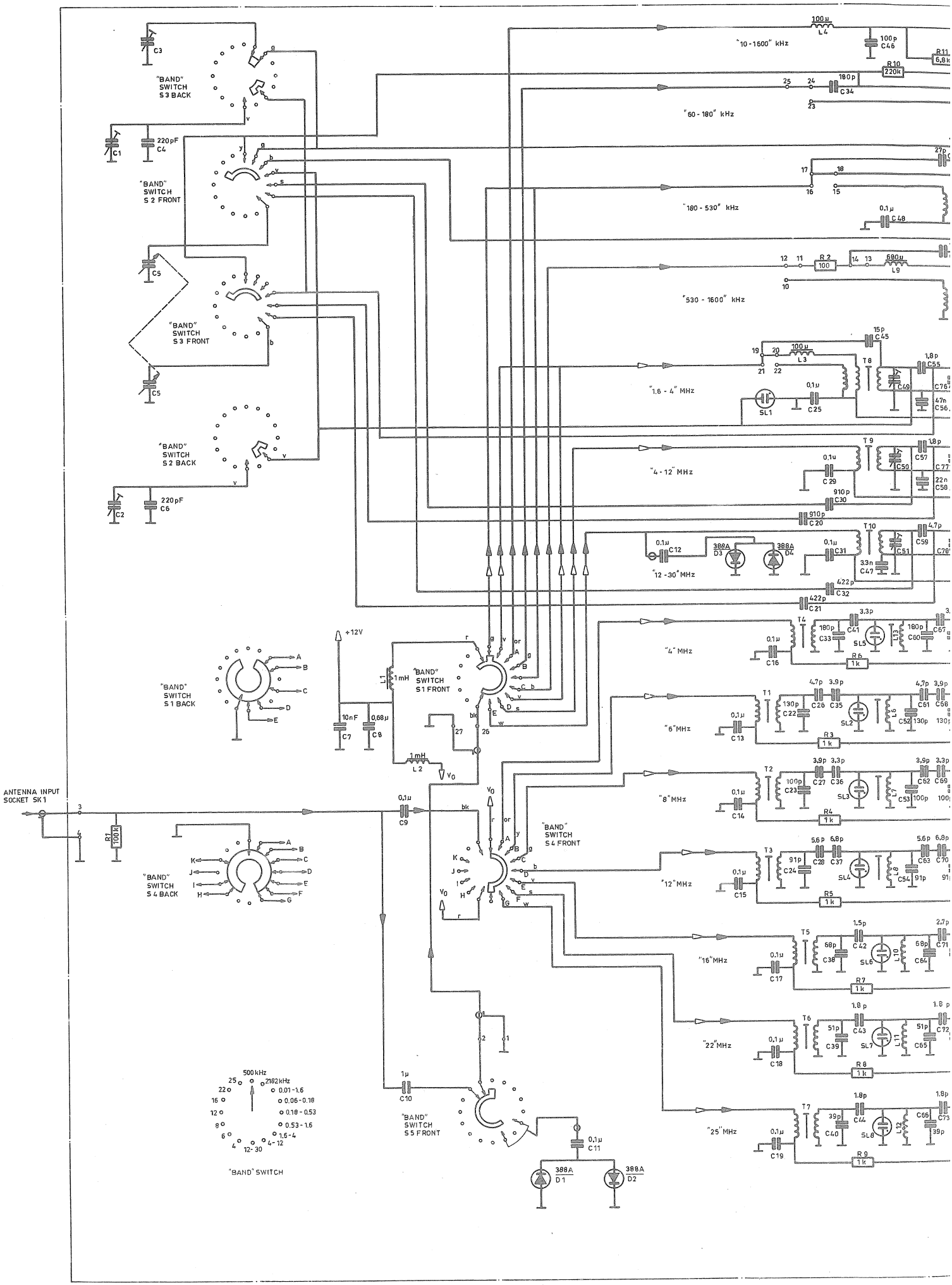
"BAND" SWITCH S 3 BACK
"BAND" SWITCH S 2 FRONT
"BAND" SWITCH S 3 FRONT
"BAND" SWITCH S 2 BACK
"BAND" SWITCH S 1 BACK
"BAND" SWITCH S 1 FRONT
"BAND" SWITCH S 4 FRONT
"BAND" SWITCH S 4 BACK
"BAND" SWITCH S 5 FRONT
"BAND" SWITCH
ANTENNA INPUT SOCKET SK1
+12V
"10 - 1600" kHz
"60 - 180" kHz
"180 - 530" kHz
"530 - 1600" kHz
"1.6 - 4" MHz
"4 - 12" MHz
"12 - 30" MHz
"4" MHz
"6" MHz
"8" MHz
"12" MHz
"16" MHz
"22" MHz
"25" MHz
500 kHz
2182 kHz
0.01 - 1.6
0.06 - 0.18
0.18 - 0.53
0.53 - 1.6
1.6 - 4
4 - 12
12 - 30

995 205 2 (4)

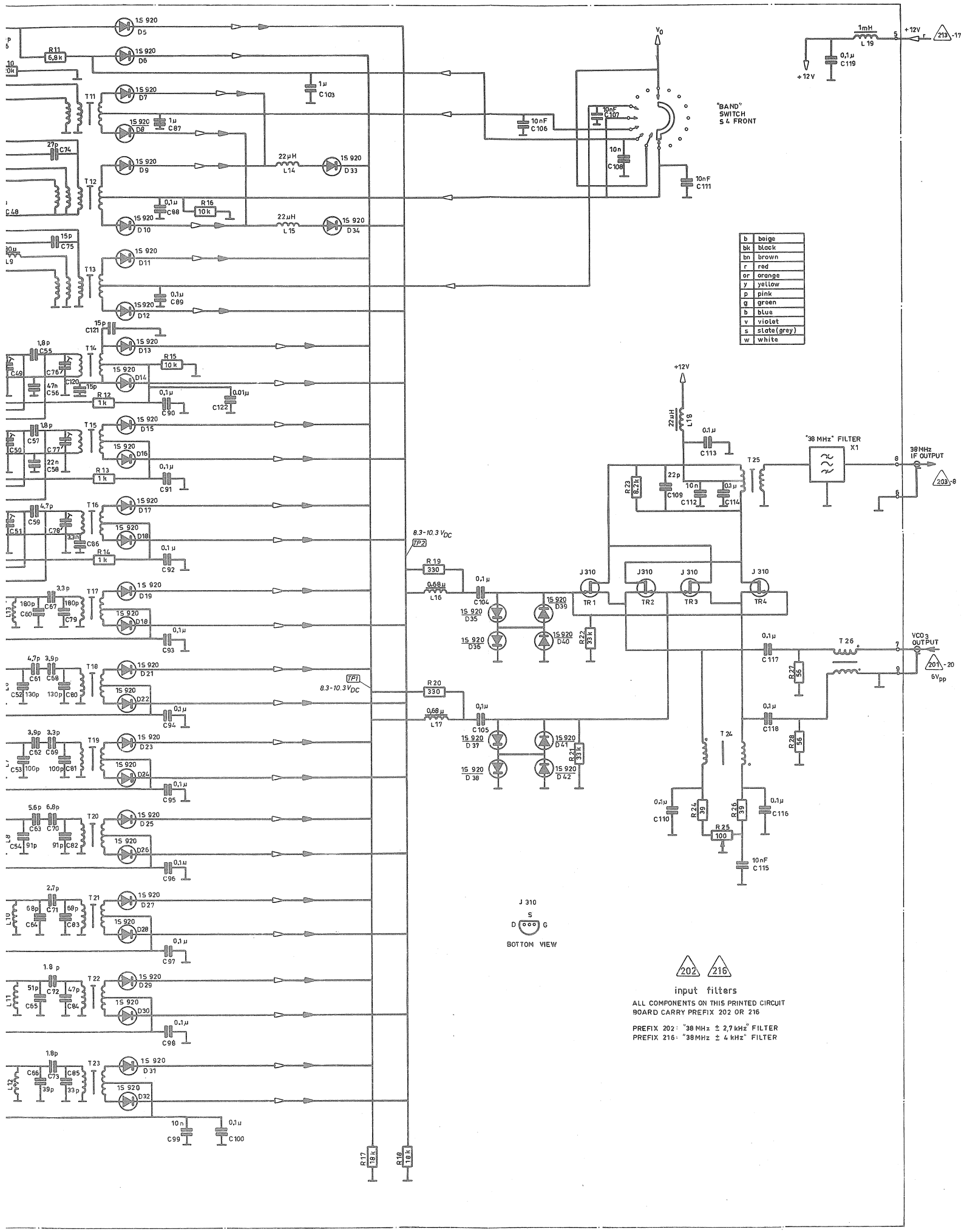

INPUT FILTERS 202 216

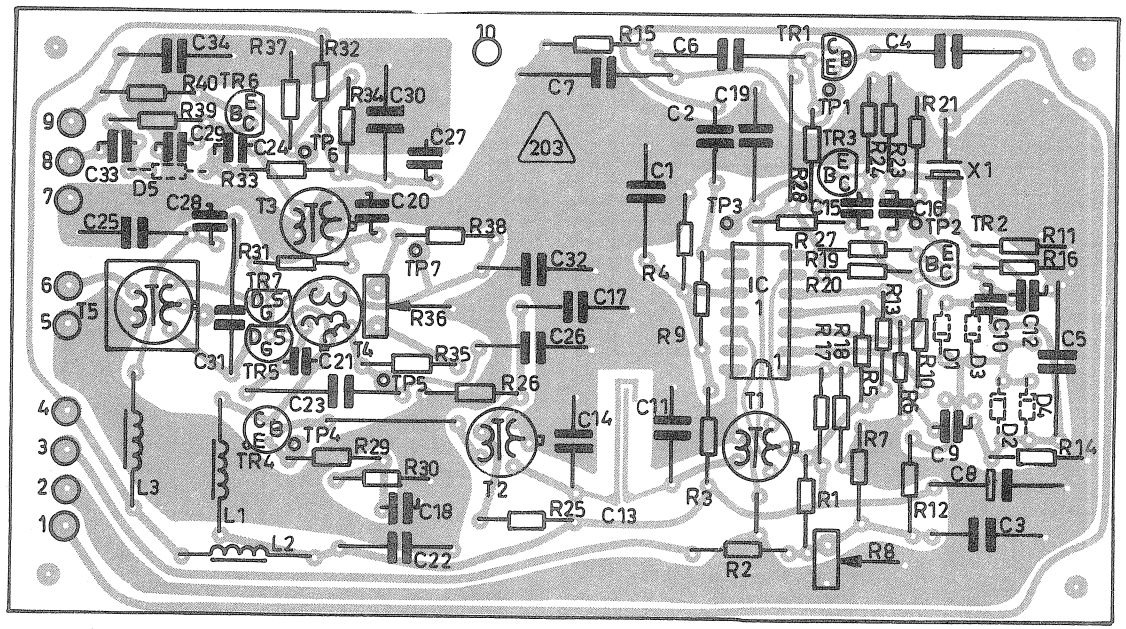

PRINTED CIRCUIT BOARD 203

VIEWED FROM COMPONENT SIDE

995 205 91

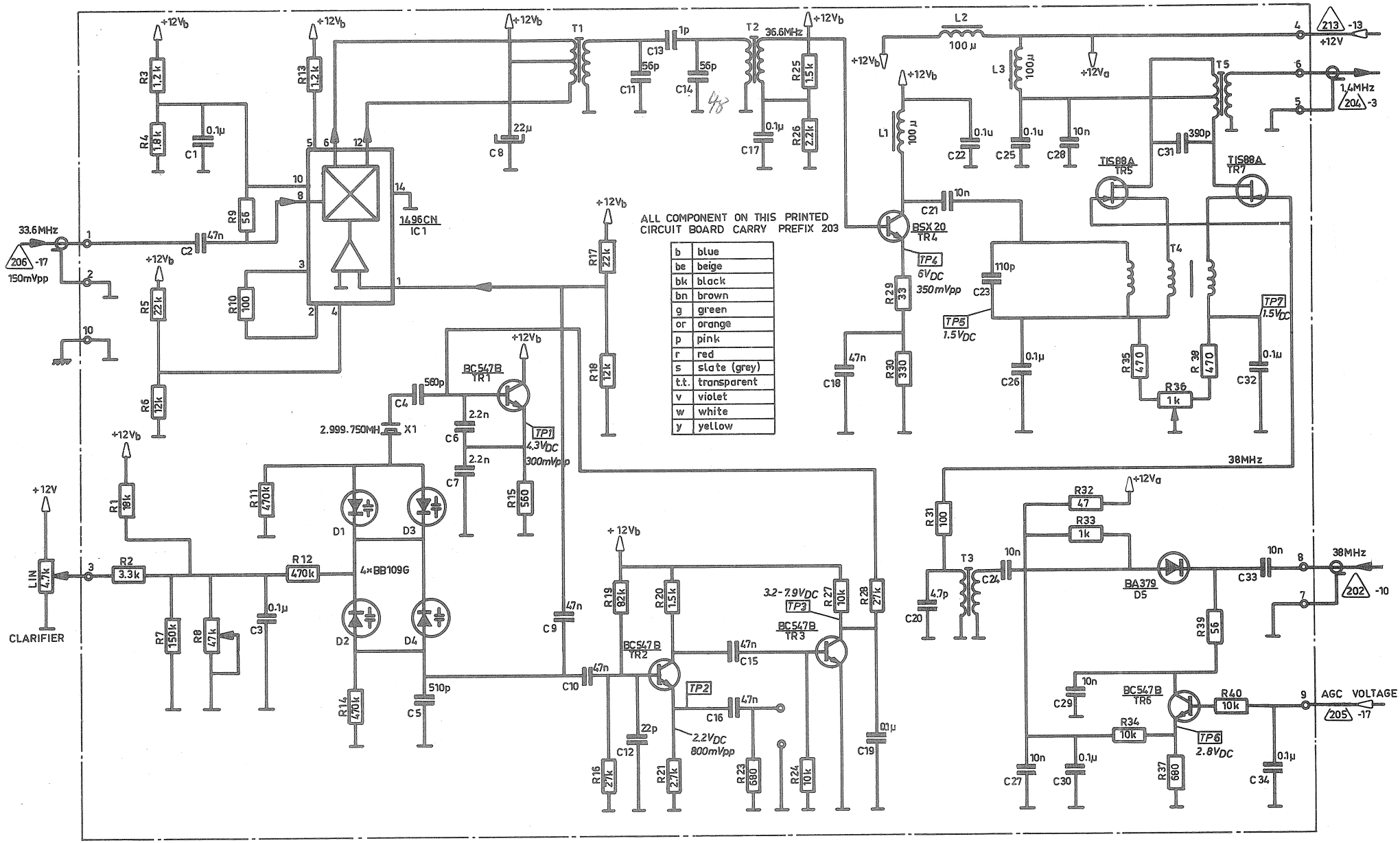

ALL COMPONENT ON THIS PRINTED CIRCUIT BOARD CARRY PREFIX 203

b	blue
be	beige
bk	black
bn	brown
g	green
or	orange
p	pink
r	red
s	slate (grey)
t.t.	transparent
v	violet
w	white
y	yellow

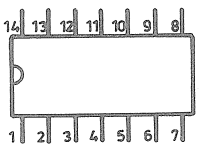

1496
TOP VIEW

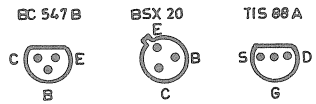

BOTTOM VIEWS

ALL TYPICAL VOLTAGE VOLTAGES ARE MEASURED WITH "AGC-OFF", "CLARIFIER" AT "0" AND "SENSITIVITY" FULLY CLOCKWISE.

995 206 0③

2. MIXER 203

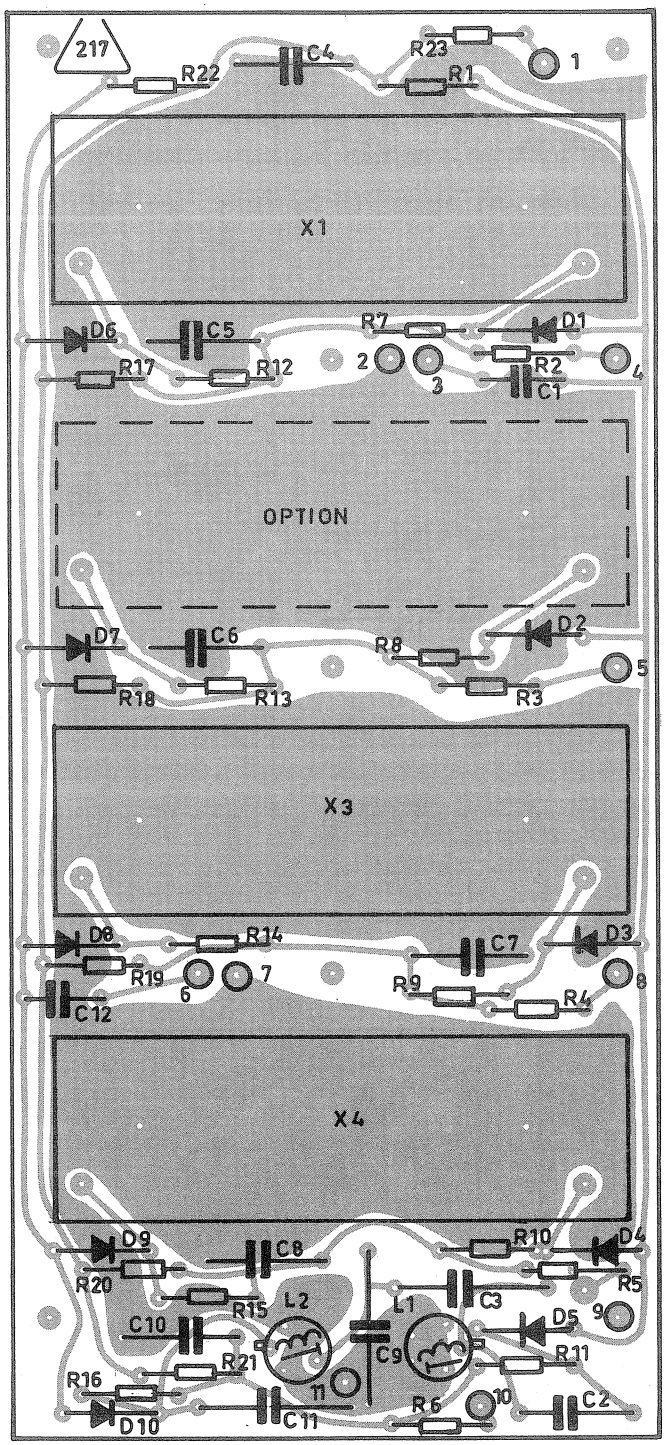

995 206 31

PRINTED CIRCUIT BOARD 217
VIEWED FROM COMPONENT SIDE

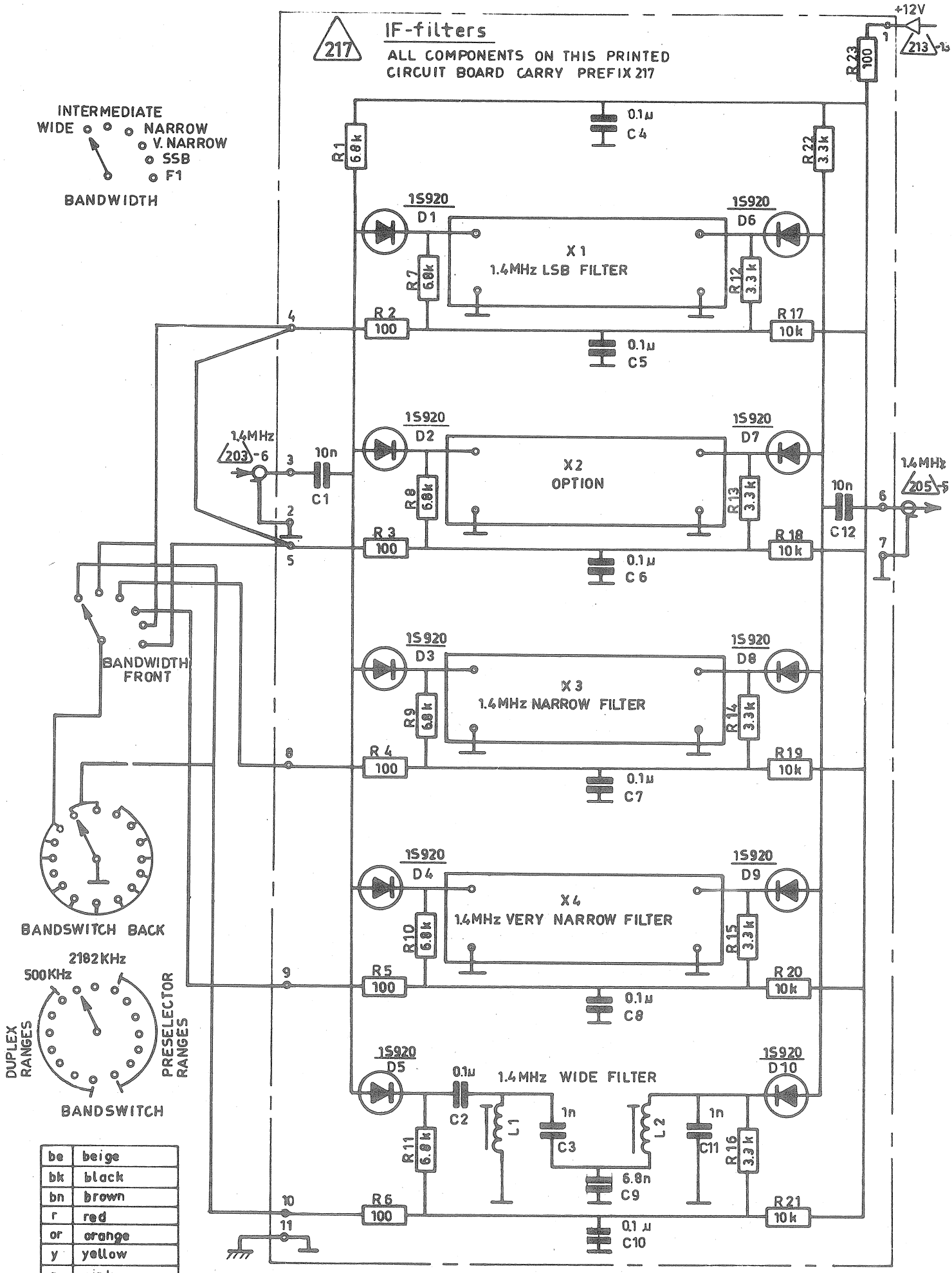

be	beige
bk	black
bn	brown
r	red
or	orange
y	yellow
p	pink
g	green
b	blue
v	violet
s	slate (grey)
w	white

IF AN OPTIONAL TELEX FILTER IS TO BE INSTALLED, PLACE IT IN POSITION X2, AND REMOVE THE CONNECTION BETWEEN TERMINAL 4 AND TERMINAL 5

IF FILTERS 217

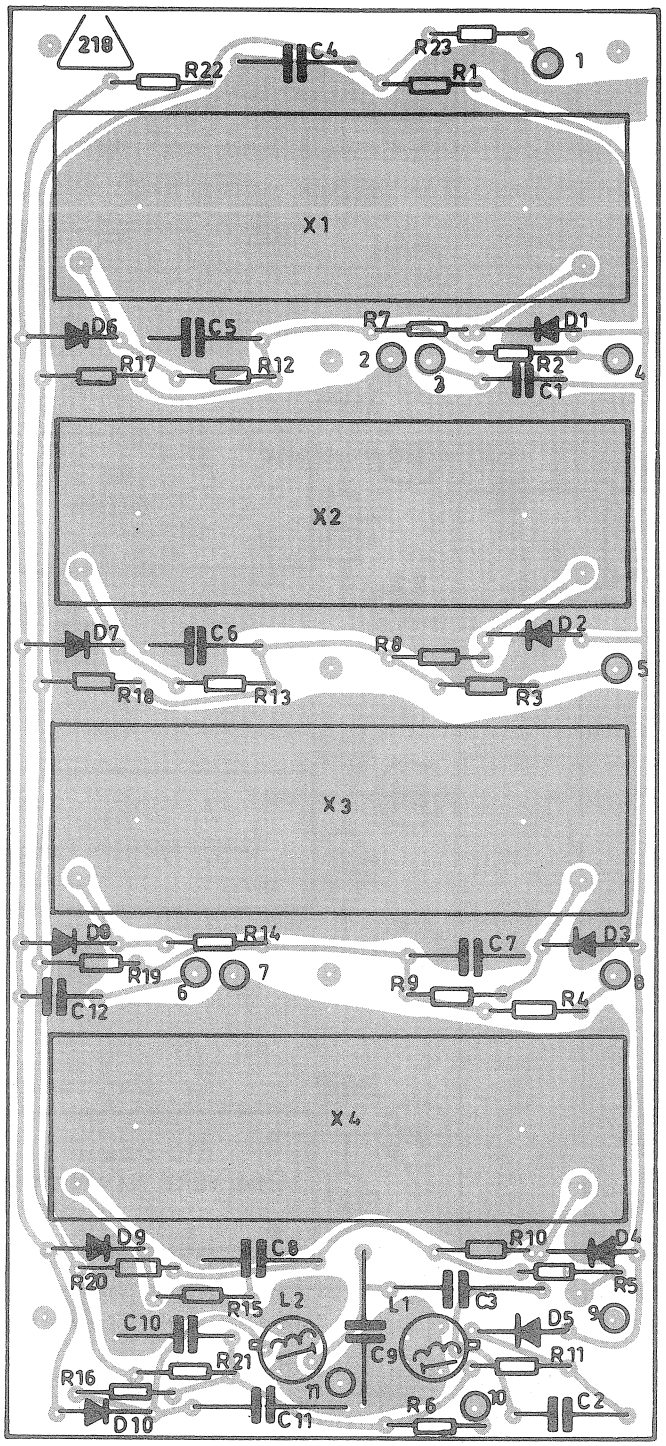

995 207 01

PRINTED CIRCUIT BOARD 218
VIEWED FROM COMPONENT SIDE

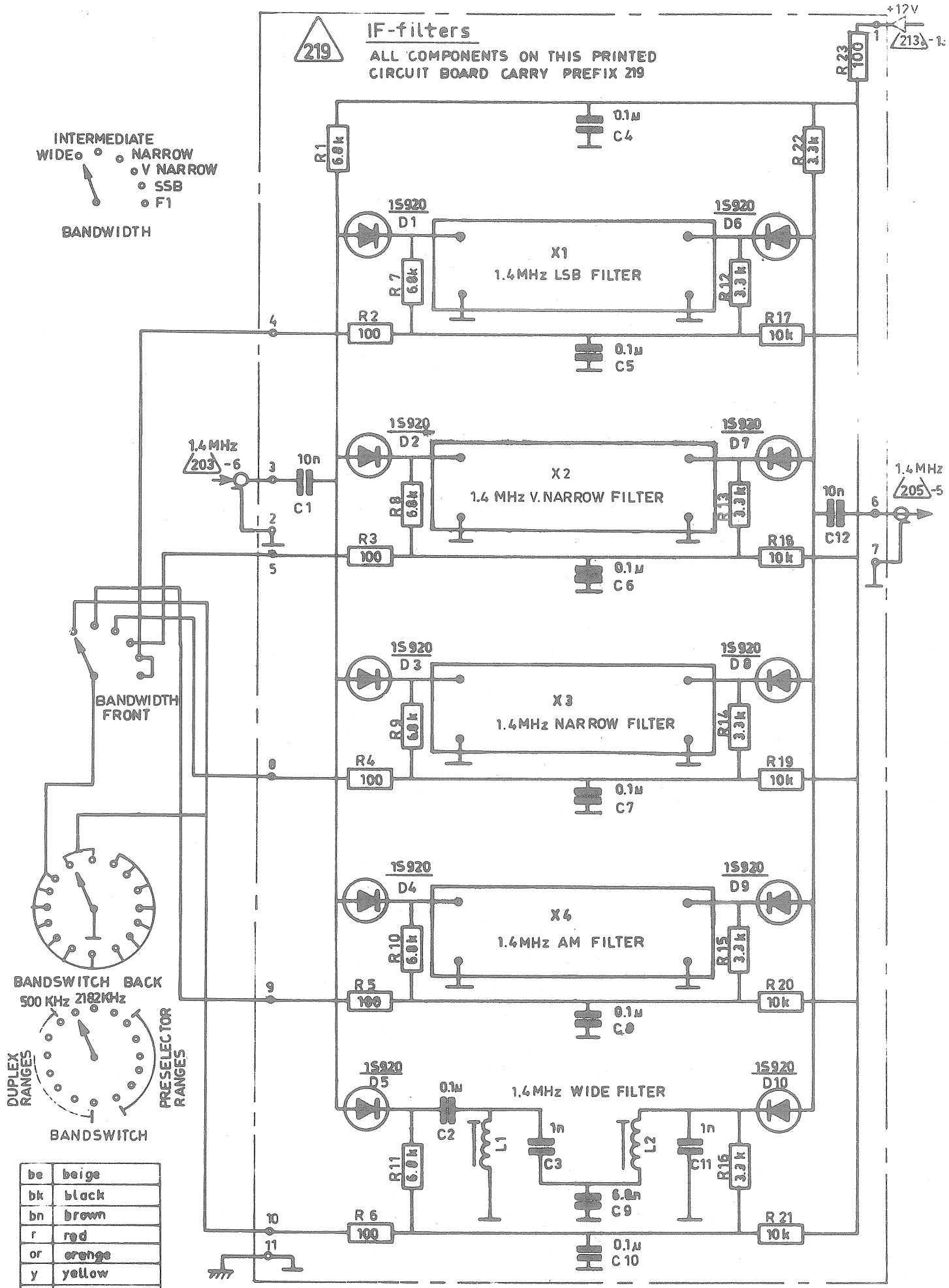

be	beige
bk	black
bn	brown
r	red
or	orange
y	yellow
p	pink
g	green
b	blue
v	violet
s	slate (grey)
w	white

IF FILTERS 218

995 207 1 (1)

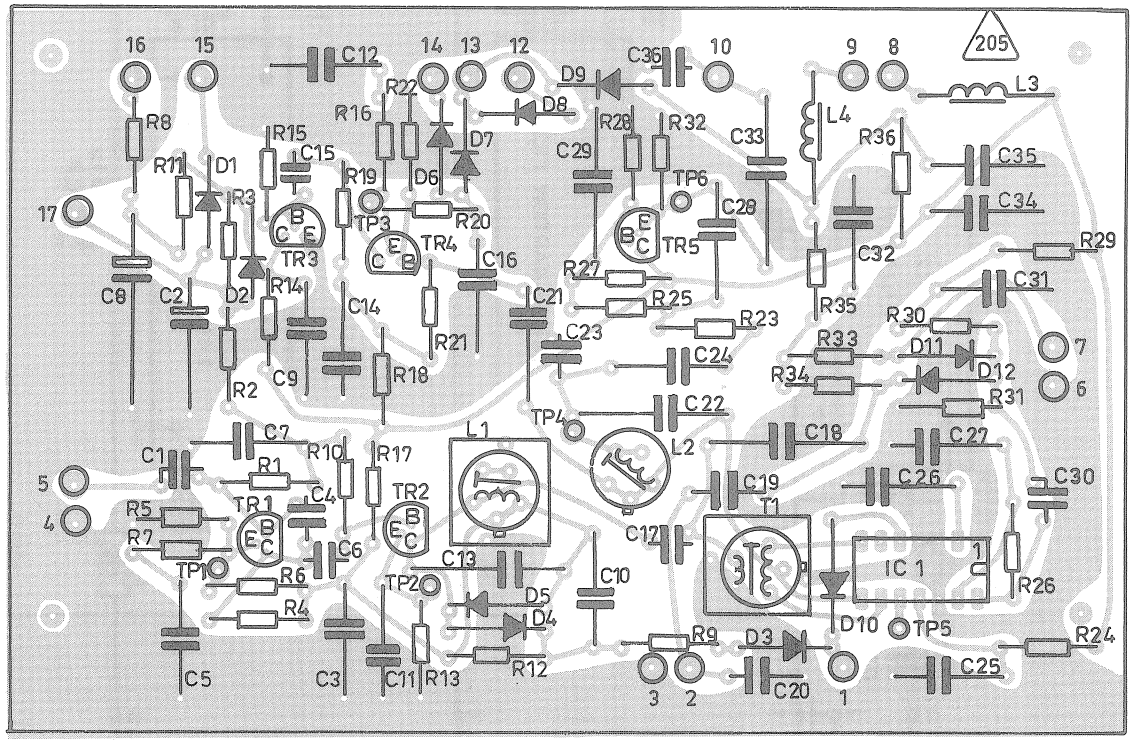

PRINTED CIRCUIT BOARD 205
VIEWED FROM COMPONENT SIDE

995 207 81

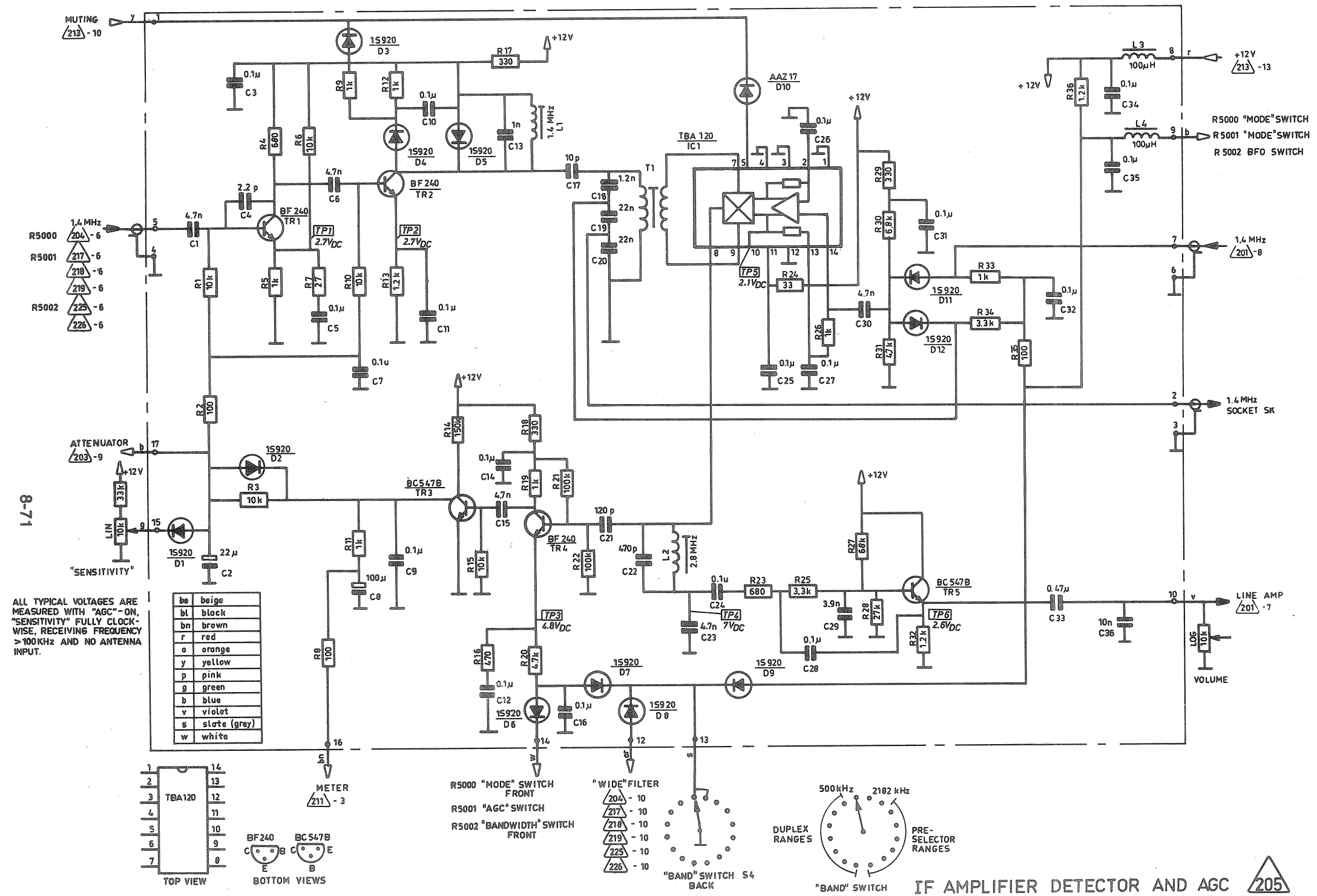

ALL TYPICAL VOLTAGES ARE MEASURED WITH "AGC"-ON, "SENSITIVITY" FULLY CLOCKWISE, RECEIVING FREQUENCY >100KHz AND NO ANTENNA INPUT.

be	beige
bl	black
bn	brown
r	red
o	orange
y	yellow
p	pink
g	green
b	blue
v	violet
s	slate (grey)
w	white

IF AMPLIFIER DETECTOR AND AGC 205

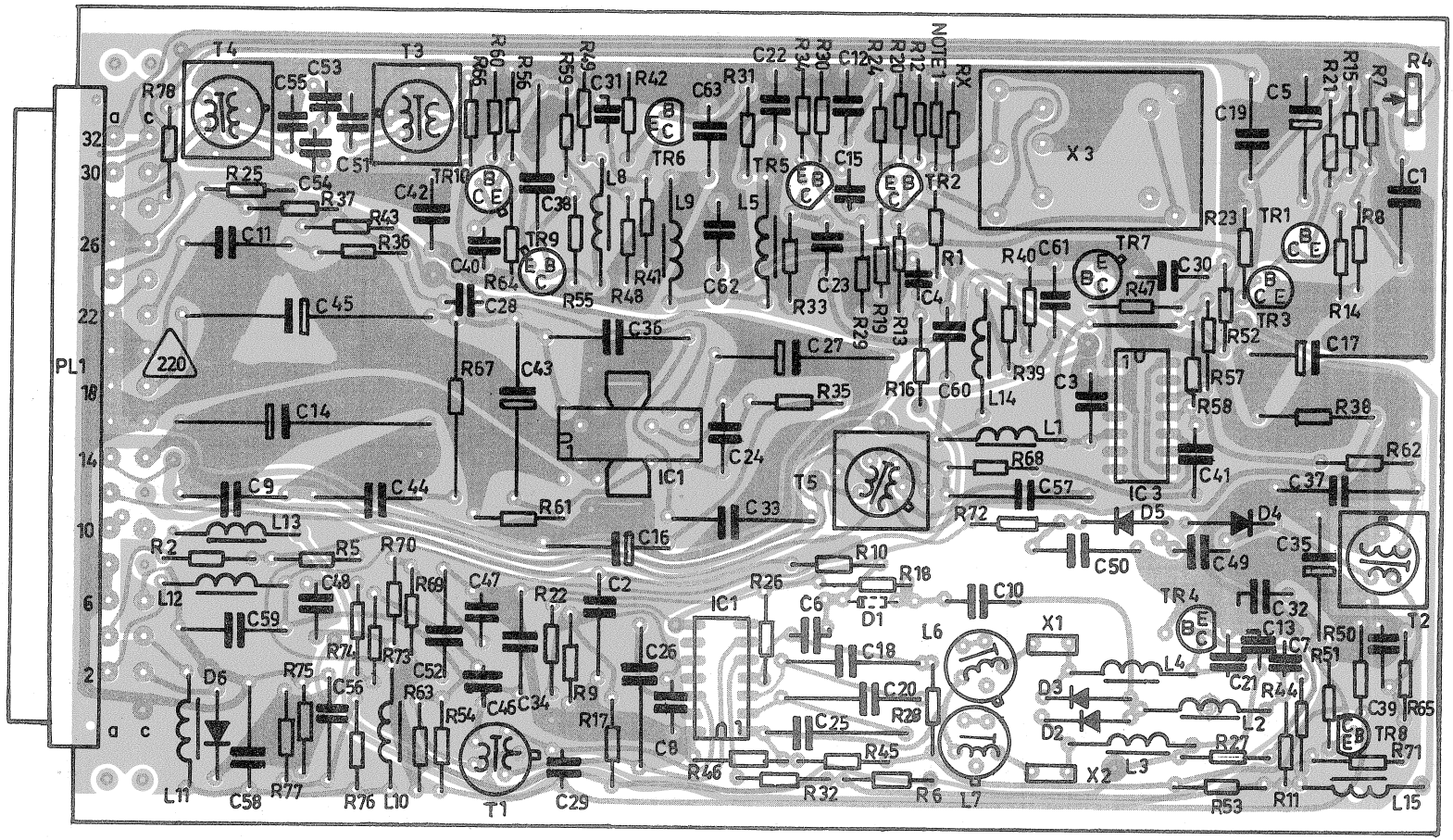

PRINTED CIRCUIT BOARD 220
VIEWED FROM COMPONENT SIDE

995 211 81

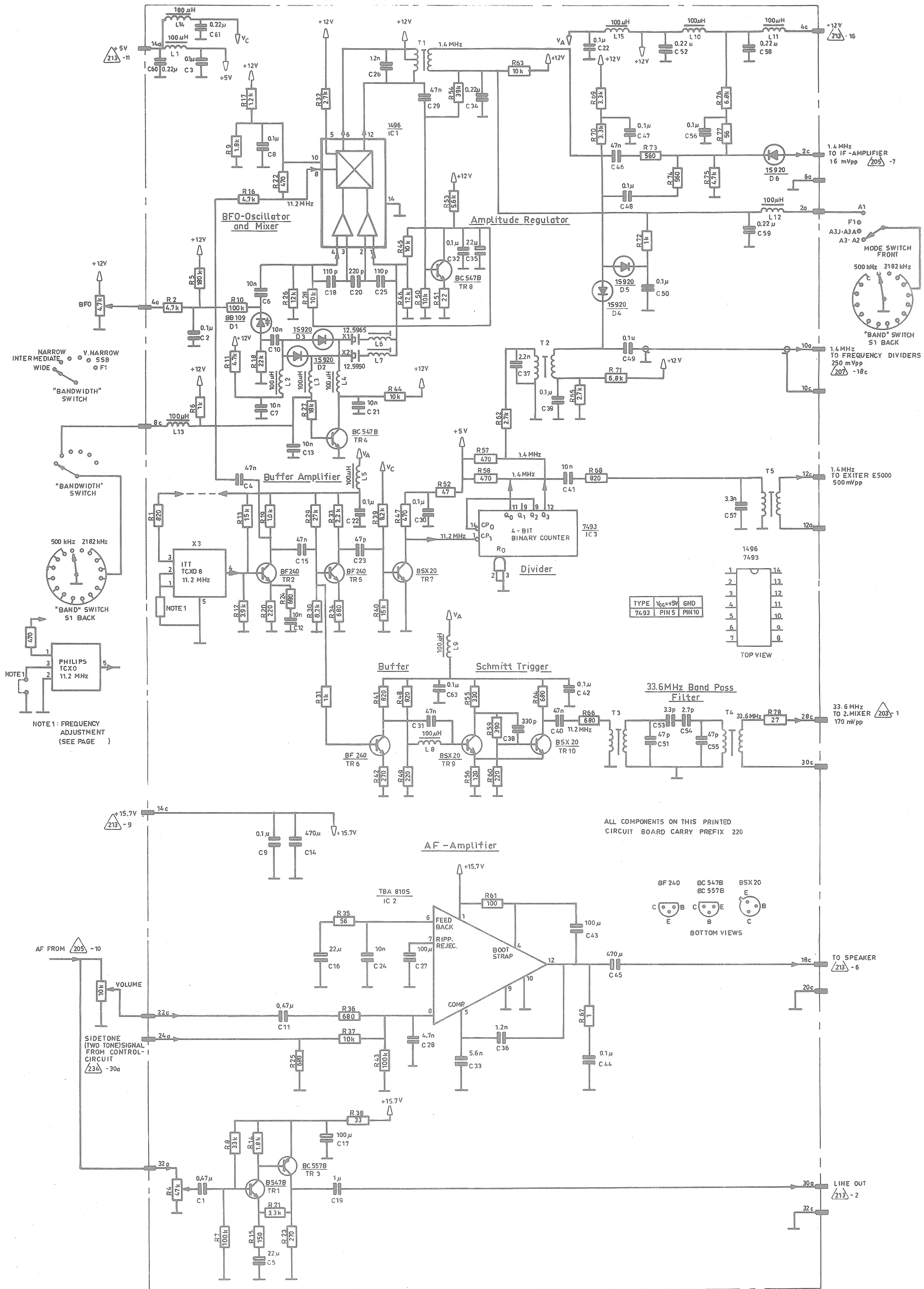

AF AMPLIFIER 220

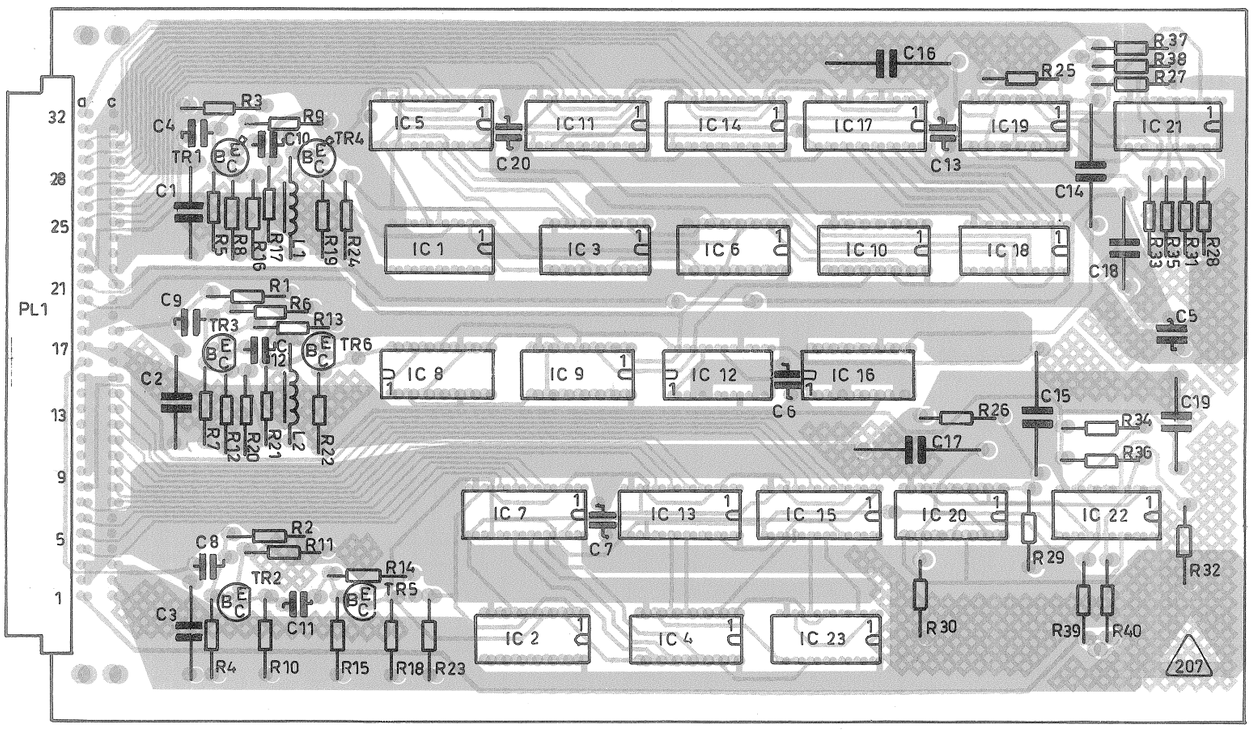

PRINTED CIRCUIT BOARD 207
VIEWED FROM COMPONENT SIDE

375 208 81

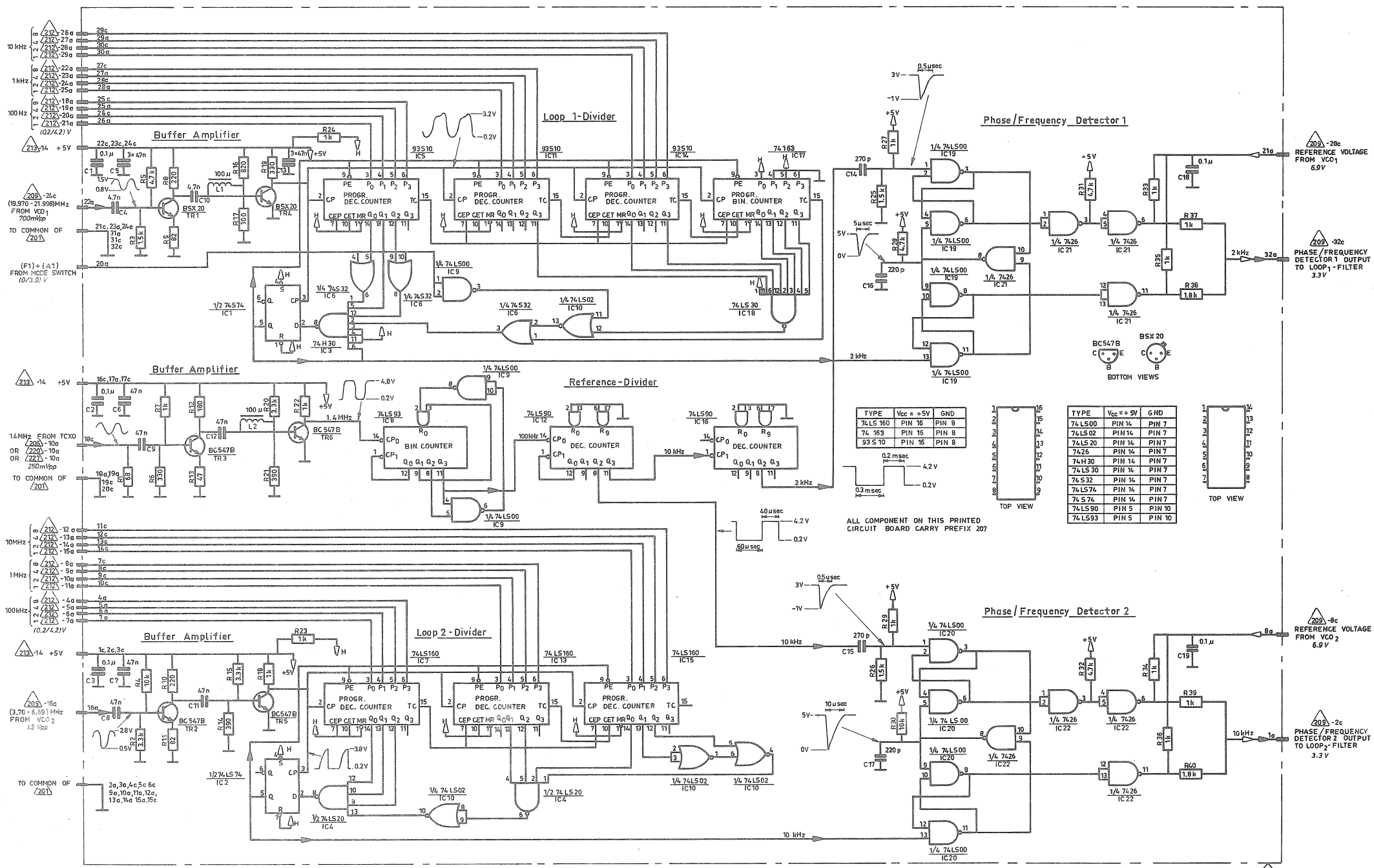

TYPE	Vcc = +5V	GND
74 LS 160	PIN 16	PIN 8
74 163	PIN 16	PIN 8
93 S 10	PIN 16	PIN 8

TYPE	Vcc = +5V	GND
74 LS00	PIN 14	PIN 7
74 LS02	PIN 14	PIN 7
74 LS 20	PIN 14	PIN 7
7426	PIN 14	PIN 7
74 H 30	PIN 14	PIN 7
74 LS 30	PIN 14	PIN 7
74 S 32	PIN 14	PIN 7
74 LS 74	PIN 14	PIN 7
74 S 74	PIN 14	PIN 7
74 LS 90	PIN 5	PIN 10
74 LS 93	PIN 5	PIN 10

995 208 9(2)

FREQUENCY DIVIDERS 207

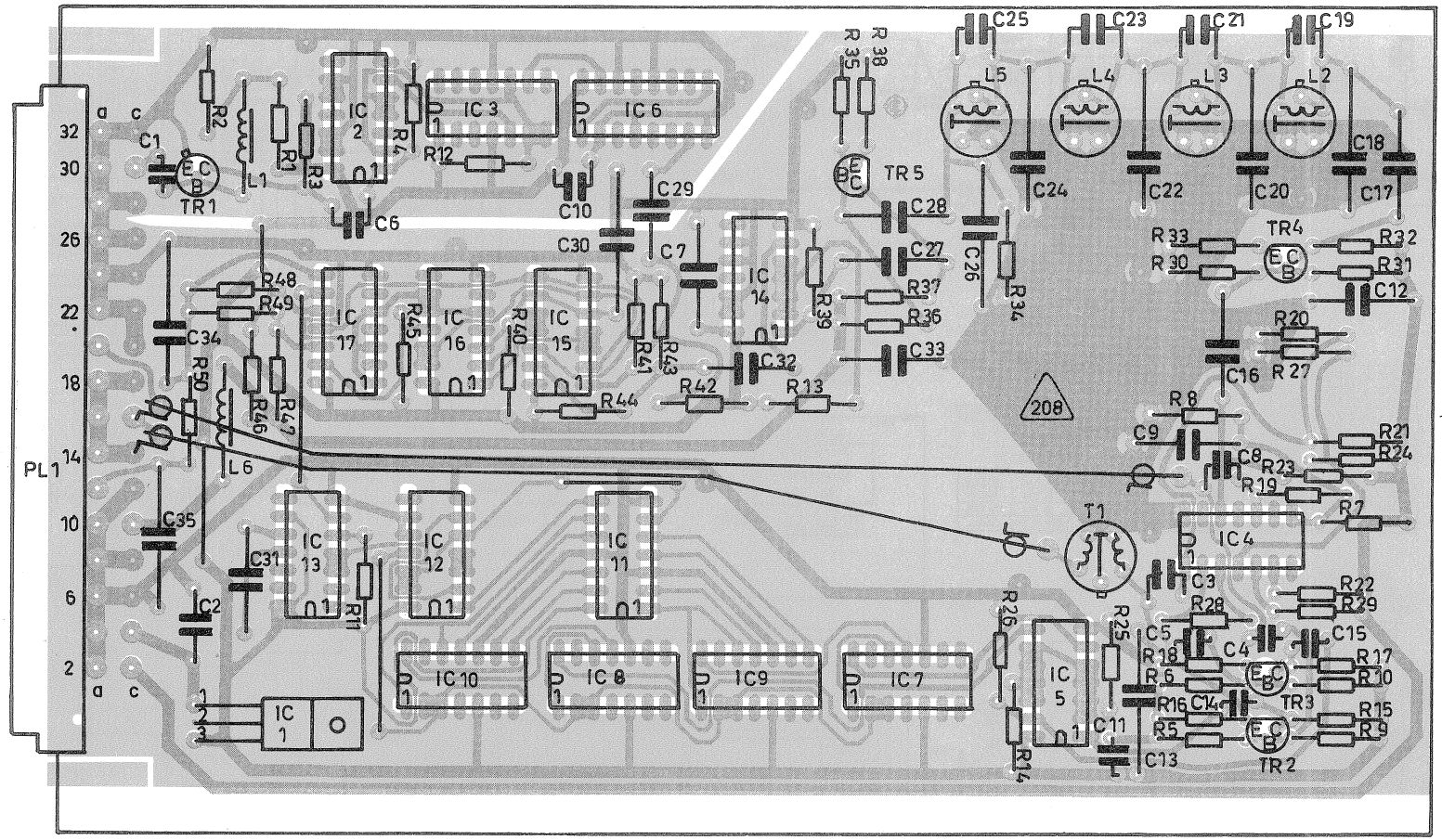

PRINTED CIRCUIT BOARD 208

VIEWED FROM COMPONENT SIDE

375 209 14

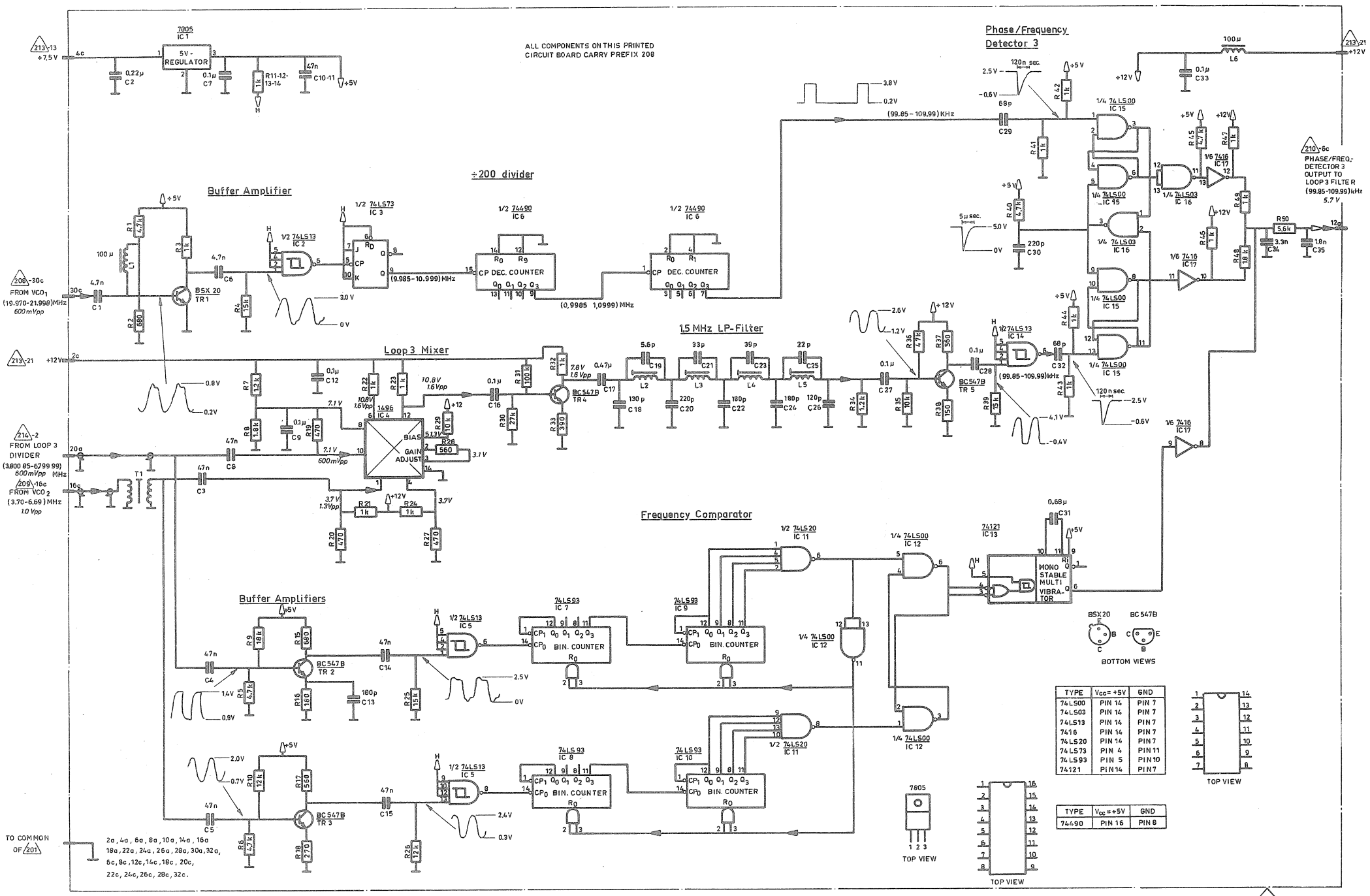

TYPE	V_{CC} = +5V	GND
74LS00	PIN 14	PIN 7
74LS03	PIN 14	PIN 7
74LS13	PIN 14	PIN 7
7416	PIN 14	PIN 7
74LS20	PIN 14	PIN 7
74LS73	PIN 4	PIN 11
74LS93	PIN 5	PIN 10
74121	PIN 14	PIN 7

TYPE	V_{CC} = +5V	GND
74490	PIN 16	PIN 8

995 209 4 (2)

LOOP TRANSLATOR 208

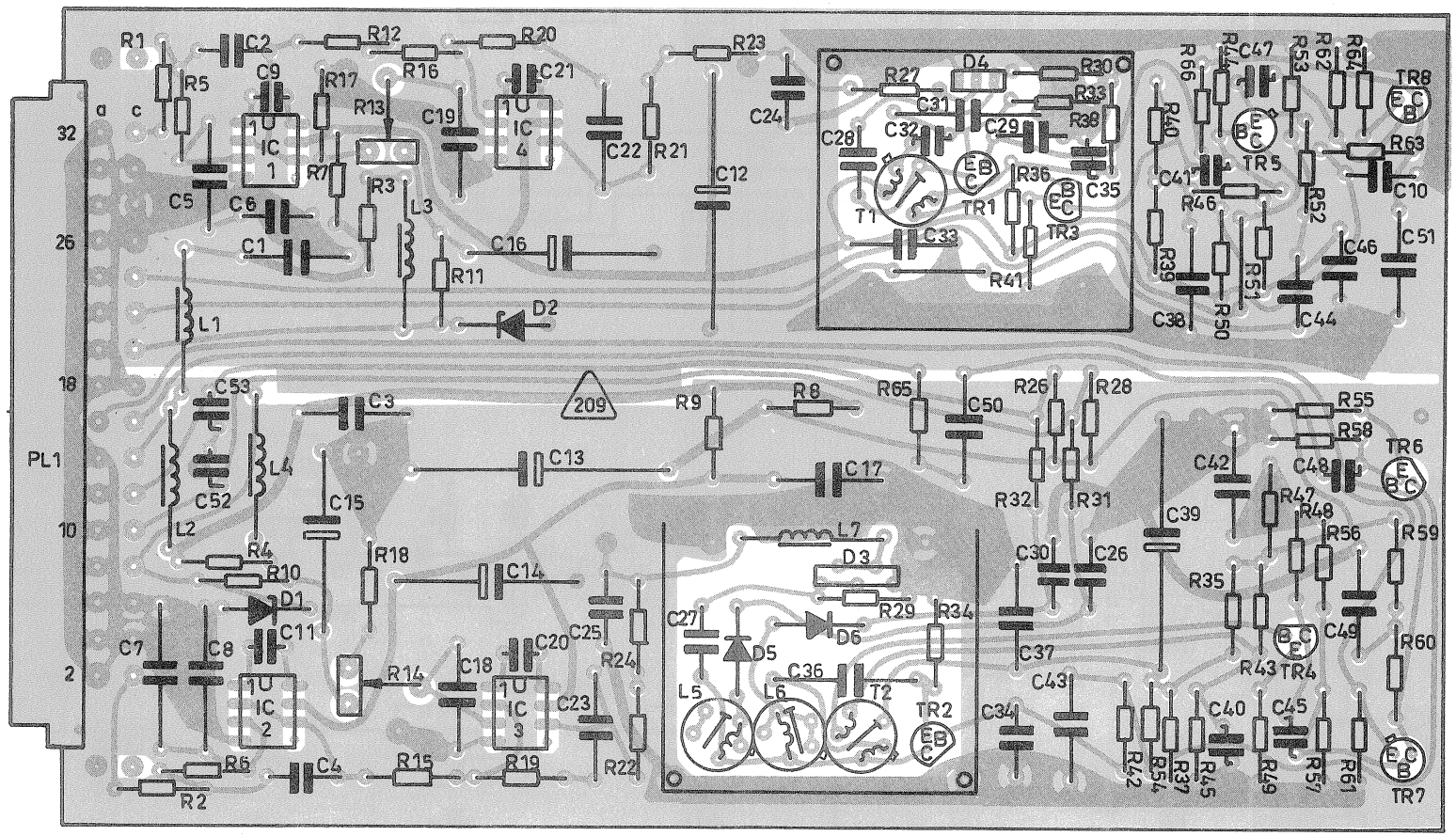

PRINTED CIRCUIT BOARD 209
VIEWED FROM COMPONENT SIDE

375 209 81

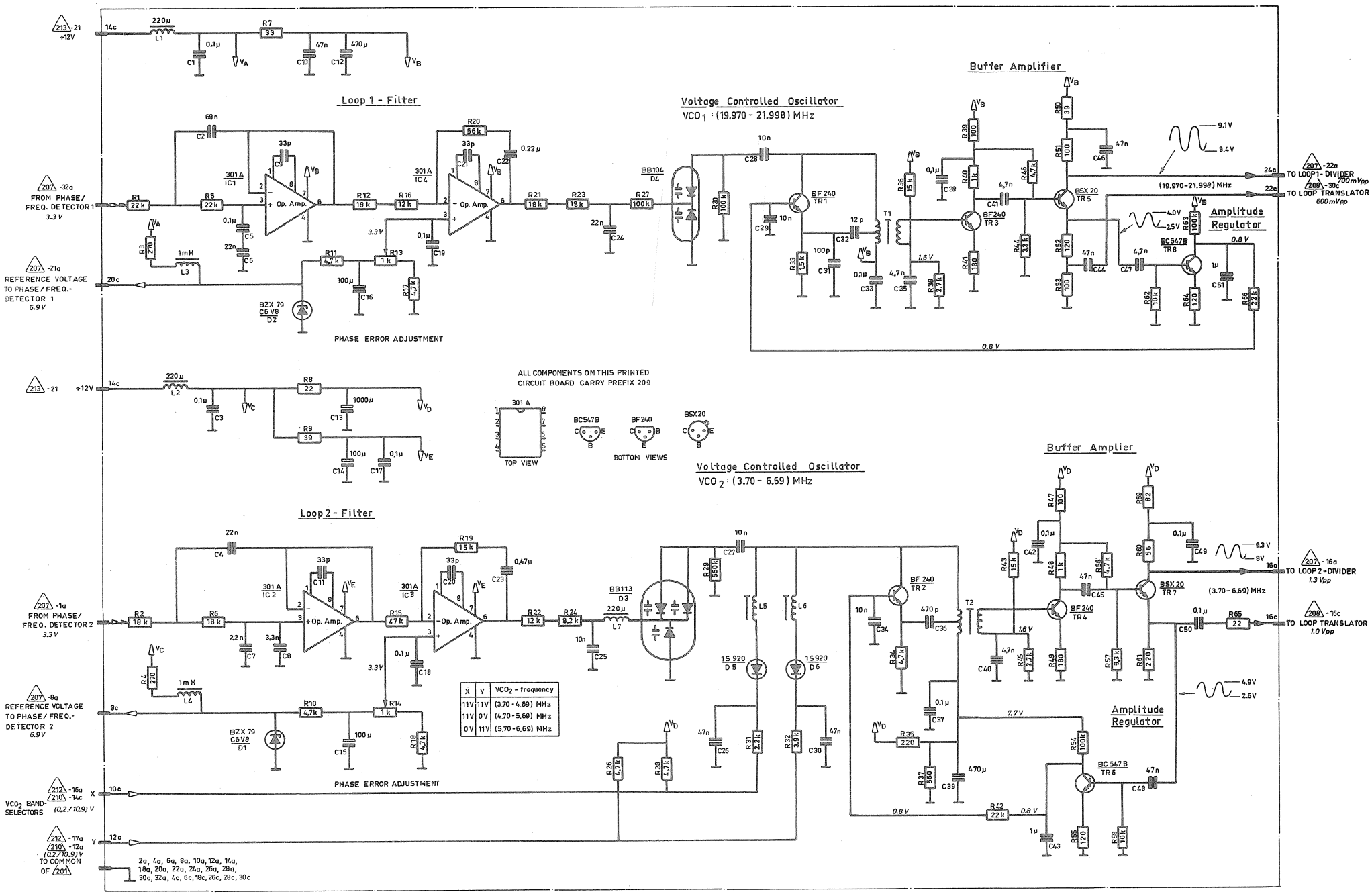

X	Y	VCO2 - frequency
11V	11V	(3.70 - 4.69) MHz
11V	0V	(4.70 - 5.69) MHz
0V	11V	(5.70 - 6.69) MHz

995 209 9 2

VCO1 and VCO2 209

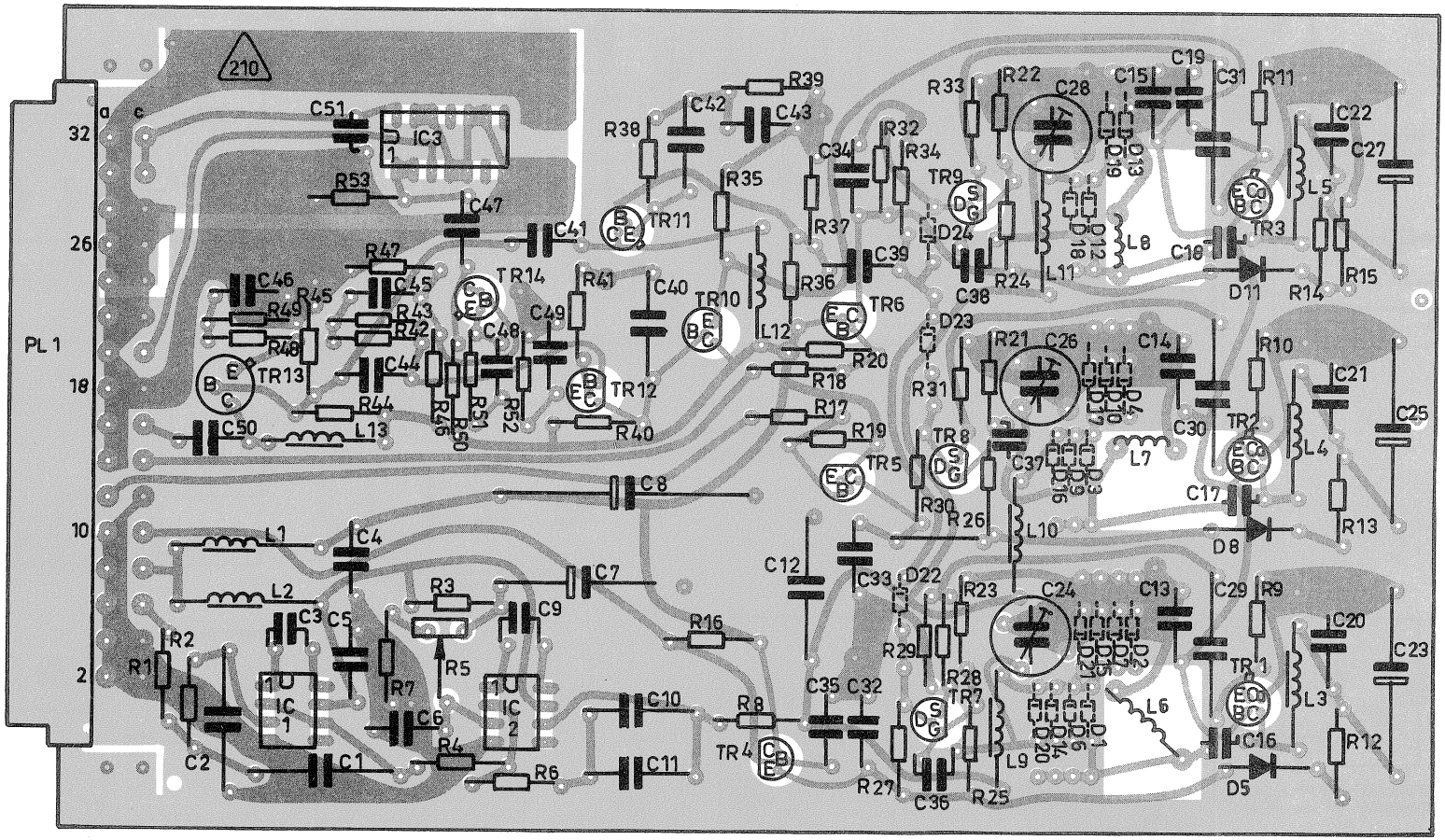

PRINTED CIRCUIT BOARD 210
VIEWED FROM COMPONENT SIDE

995 210 31

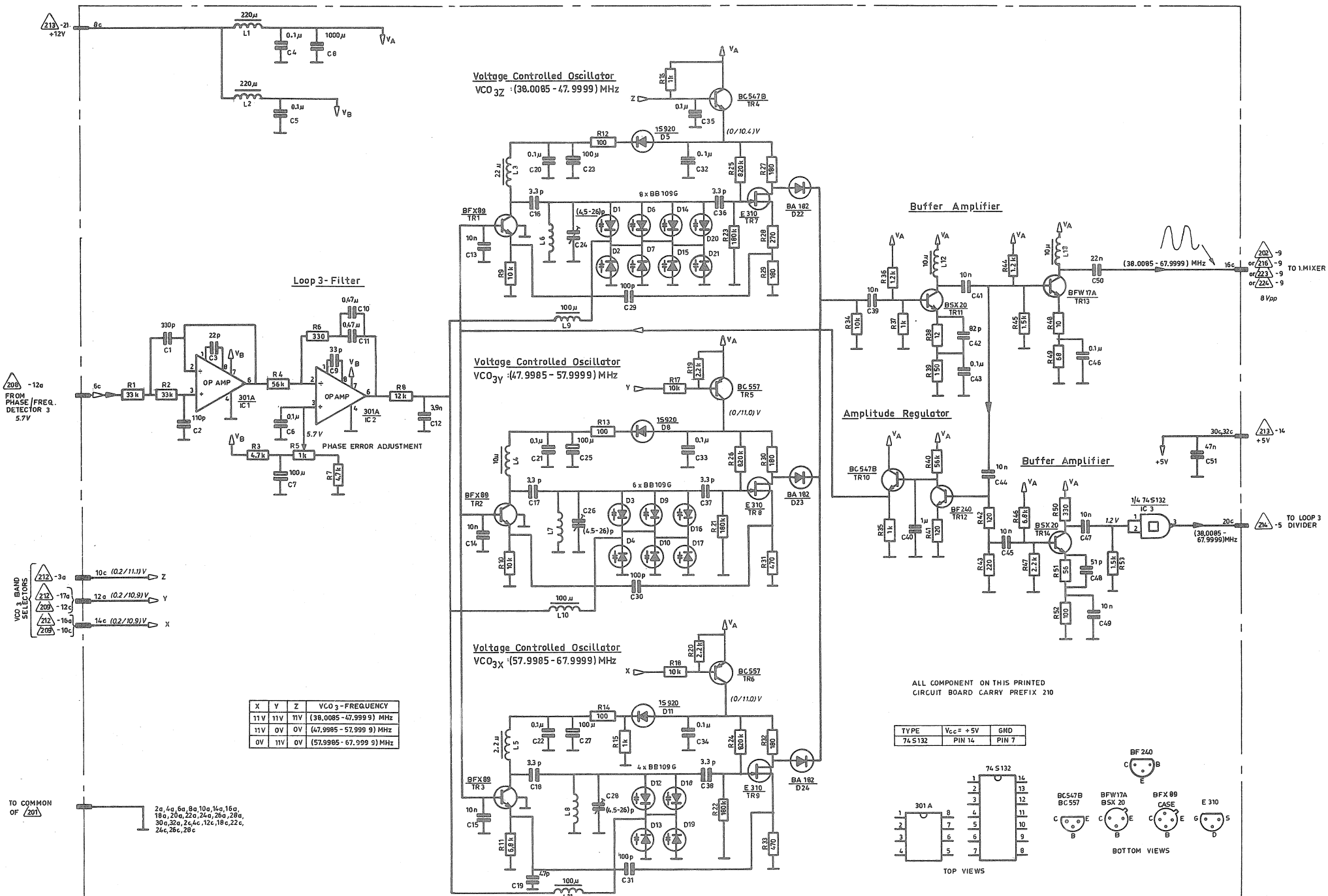

X	Y	Z	VCO 3 - FREQUENCY
11 V	11 V	11 V	(38.0085 - 47.999 9) MHz
11 V	0 V	0 V	(47.9985 - 57.999 9) MHz
0 V	11 V	0 V	(57.9985 - 67.999 9) MHz

TYPE	V_{CC} = + 5V	GND
74 S 132	PIN 14	PIN 7

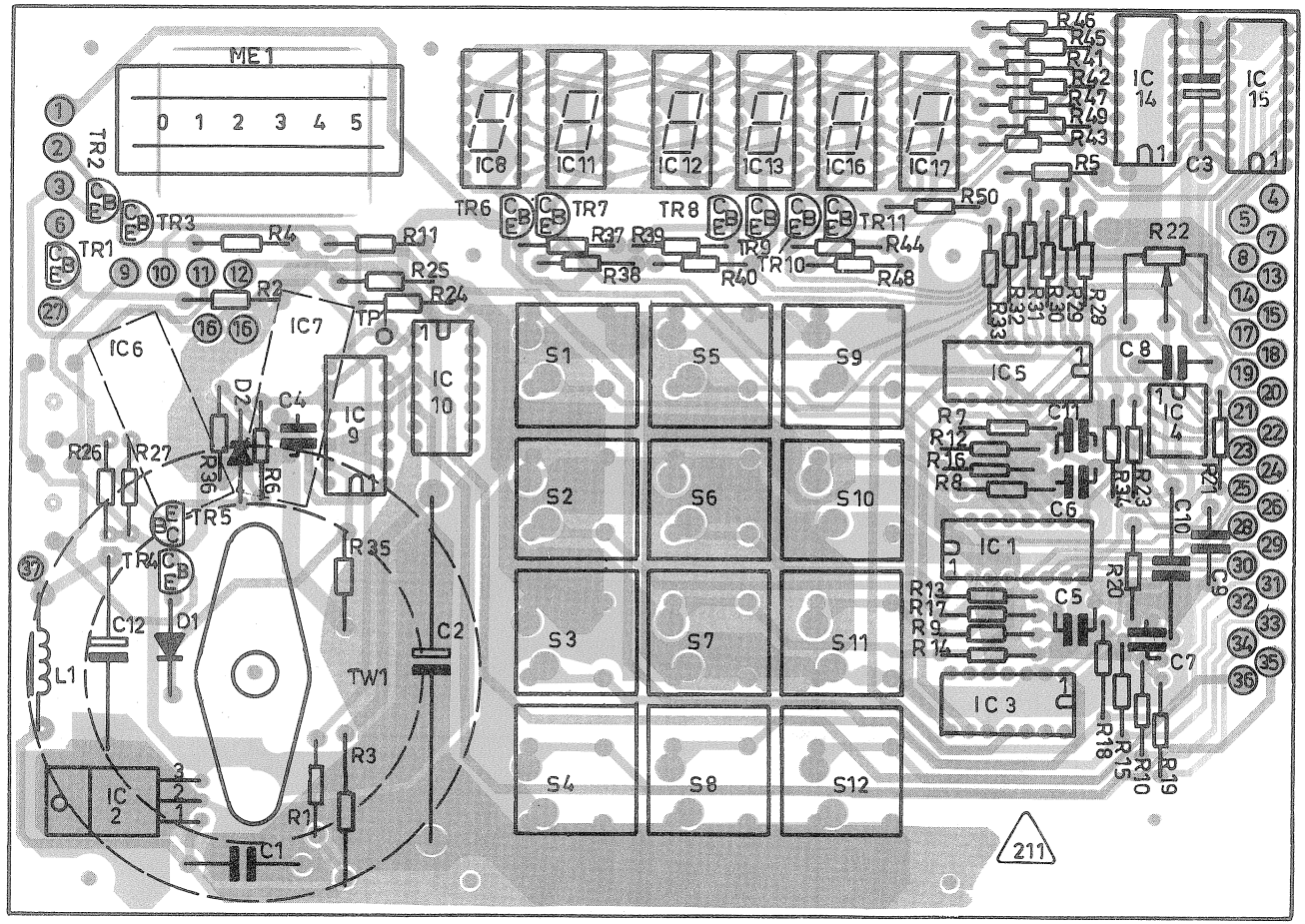

PRINTED CIRCUIT BOARD 211
VIEWED FROM COMPONENT SIDE

995 210 81

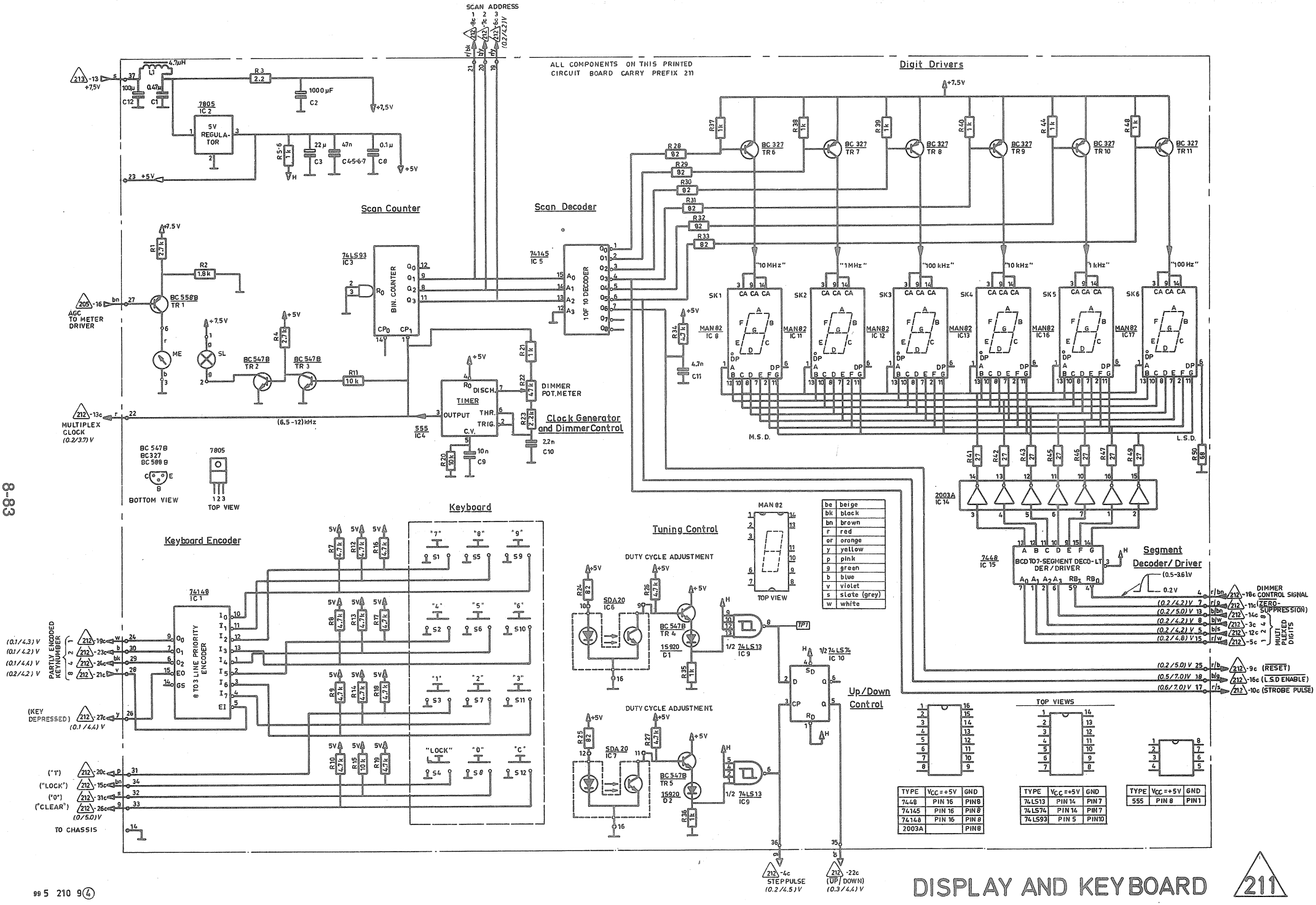
ALL COMPONENTS ON THIS PRINTED CIRCUIT BOARD CARRY PREFIX 211
SCAN ADDRESS
Digit Drivers
Scan Counter
Scan Decoder
7805 IC 2
5V REGULATOR
74LS93 IC3
BIN. COUNTER
74145 IC 5
1 OF 10 DECODER
BC 558B TR 1
AGC TO METER DRIVER
ME
SL
BC 547B TR 2
BC 547B TR 3
MULTIPLEX CLOCK (0.2/3.7) V
(6.5 -12) kHz
555 IC4
TIMER
DISCH.
OUTPUT
THR.
TRIG.
C.V.
DIMMER POT.METER
Clock Generator and Dimmer Control
BC 547B BC 327 BC 588 B
BOTTOM VIEW
TOP VIEW
Keyboard
Keyboard Encoder
74148 IC 1
8 TO 3 LINE PRIORITY ENCODER
PARTLY ENCODED KEYNUMBER
(KEY DEPRESSED) (0.1 /4.4) V
TO CHASSIS
Tuning Control
DUTY CYCLE ADJUSTMENT
SDA20 IC6
SDA 20 IC7
BC 547B TR 4
BC 547B TR 5
15920 D1
15920 D2
1/2 74LS13 IC 9
1/2 74LS74 IC 10
Up/Down Control
STEP PULSE (0.2/4.5) V
(UP/DOWN) (0.3/4.4) V
"10 MHz"
"1 MHz"
"100 kHz"
"10 kHz"
"1 kHz"
"100 Hz"
BC 327 TR 6
BC 327 TR 7
BC 327 TR 8
BC 327 TR 9
BC 327 TR 10
BC 327 TR 11
MAN 82 IC 8
MAN82 IC 11
MAN82 IC 12
MAN82 IC13
MAN82 IC16
MAN82 IC17
M.S.D.
L.S.D.
2003A IC 14
7448 IC 15
BCD TO 7-SEGMENT DECO-DER / DRIVER
Segment Decoder/ Driver
DIMMER CONTROL SIGNAL
(ZERO-SUPPRESSION)
MULTIPLEXED DIGITS
(RESET)
(L.S.D ENABLE)
(STROBE PULSE)
TOP VIEW
TOP VIEWS
TYPE | VCC =+5V | GND
7448 | PIN 16 | PIN8
74145 | PIN 16 | PIN 8
74148 | PIN 16 | PIN 8
2003A | | PIN8
74LS13 | PIN 14 | PIN 7
74LS74 | PIN 14 | PIN 7
74LS93 | PIN 5 | PIN 10
555 | PIN 8 | PIN 1
be beige
bk black
bn brown
r red
or orange
y yellow
p pink
g green
b blue
v violet
s slate (grey)
w white
DISPLAY AND KEYBOARD
211

99 5 210 9④

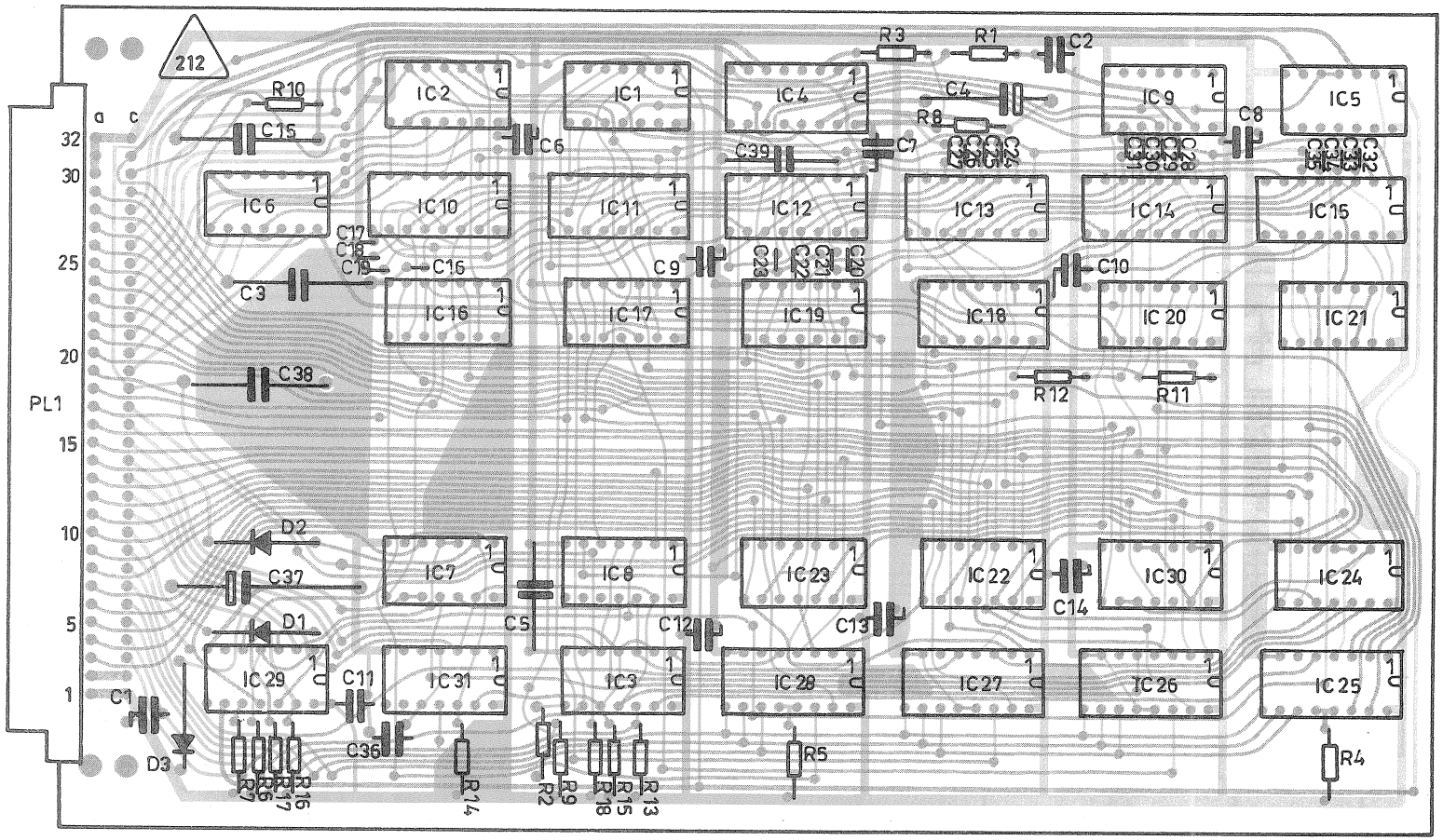

PRINTED CIRCUIT BOARD 212
VIEWED FROM COMPONENT SIDE

995 211 31

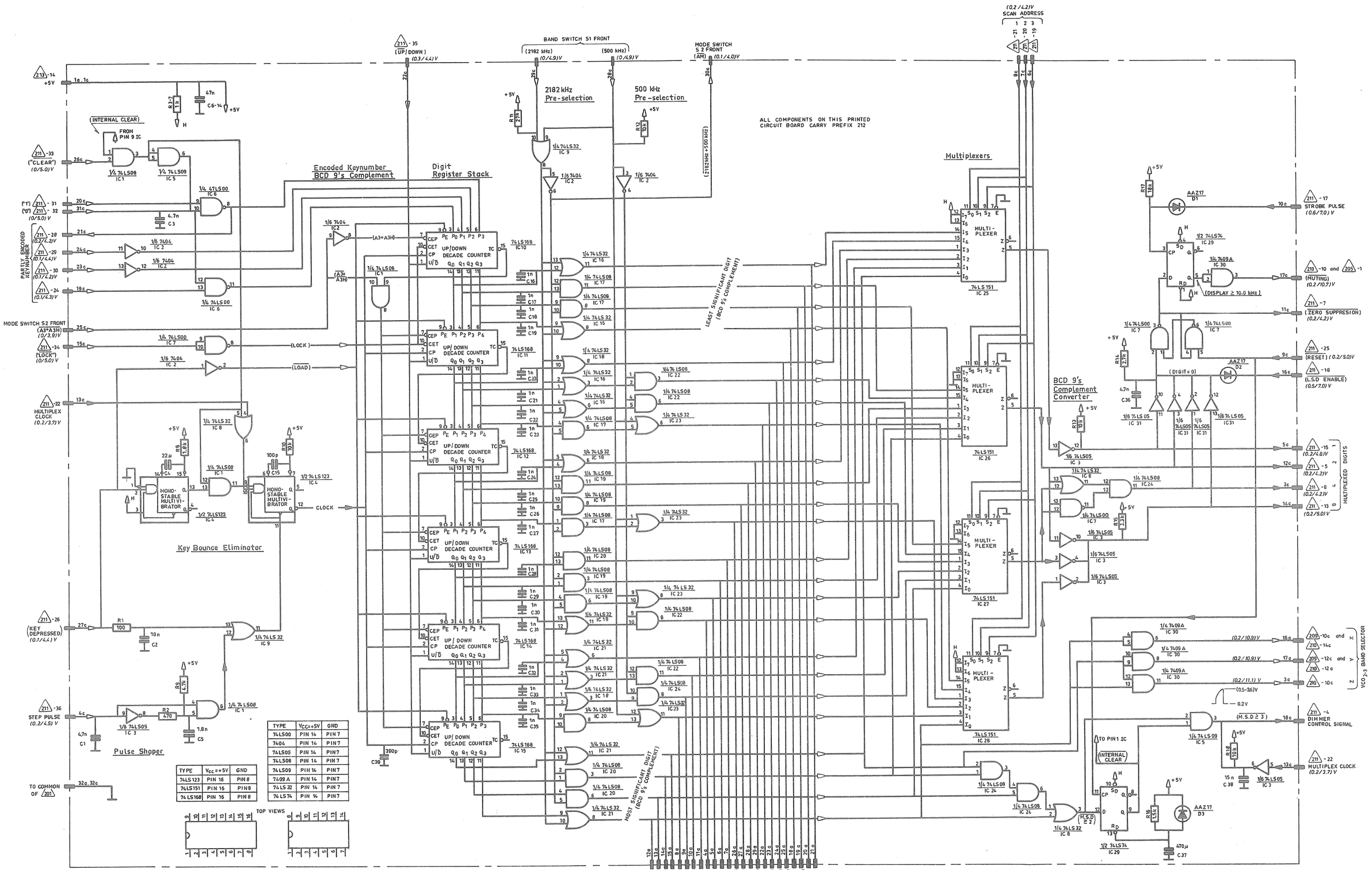

TYPE	V_{CC}=+5V	GND
74LS00	PIN 14	PIN 7
7404	PIN 14	PIN 7
74LS05	PIN 14	PIN 7
74LS08	PIN 14	PIN 7
74LS09	PIN 14	PIN 7
7409 A	PIN 14	PIN 7
74LS 32	PIN 14	PIN 7
74LS74	PIN 14	PIN 7

TYPE	V_{CC}=+5V	GND
74LS123	PIN 16	PIN 8
74LS151	PIN 16	PIN 8
74LS168	PIN 16	PIN 8

TOP VIEWS

995 211 4③

SYNTHESIZER CONTROL

212

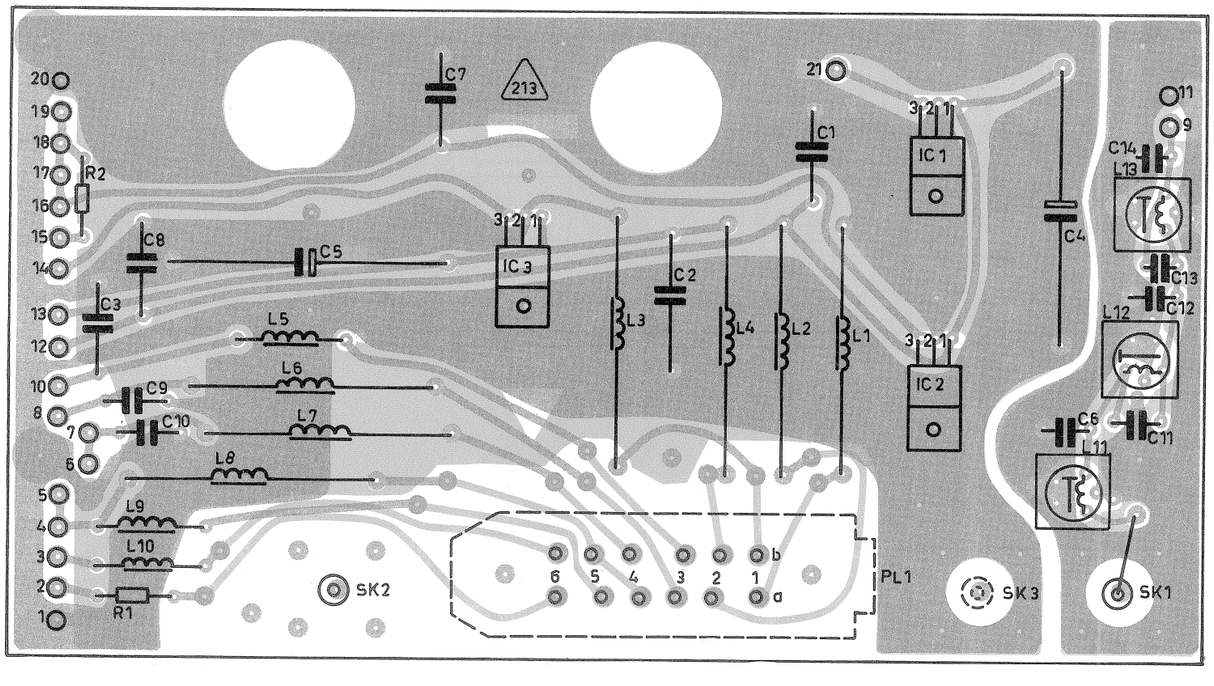

PRINTED CIRCUIT BOARD 213
VIEWED FROM COMPONENT SIDE

995 214 71

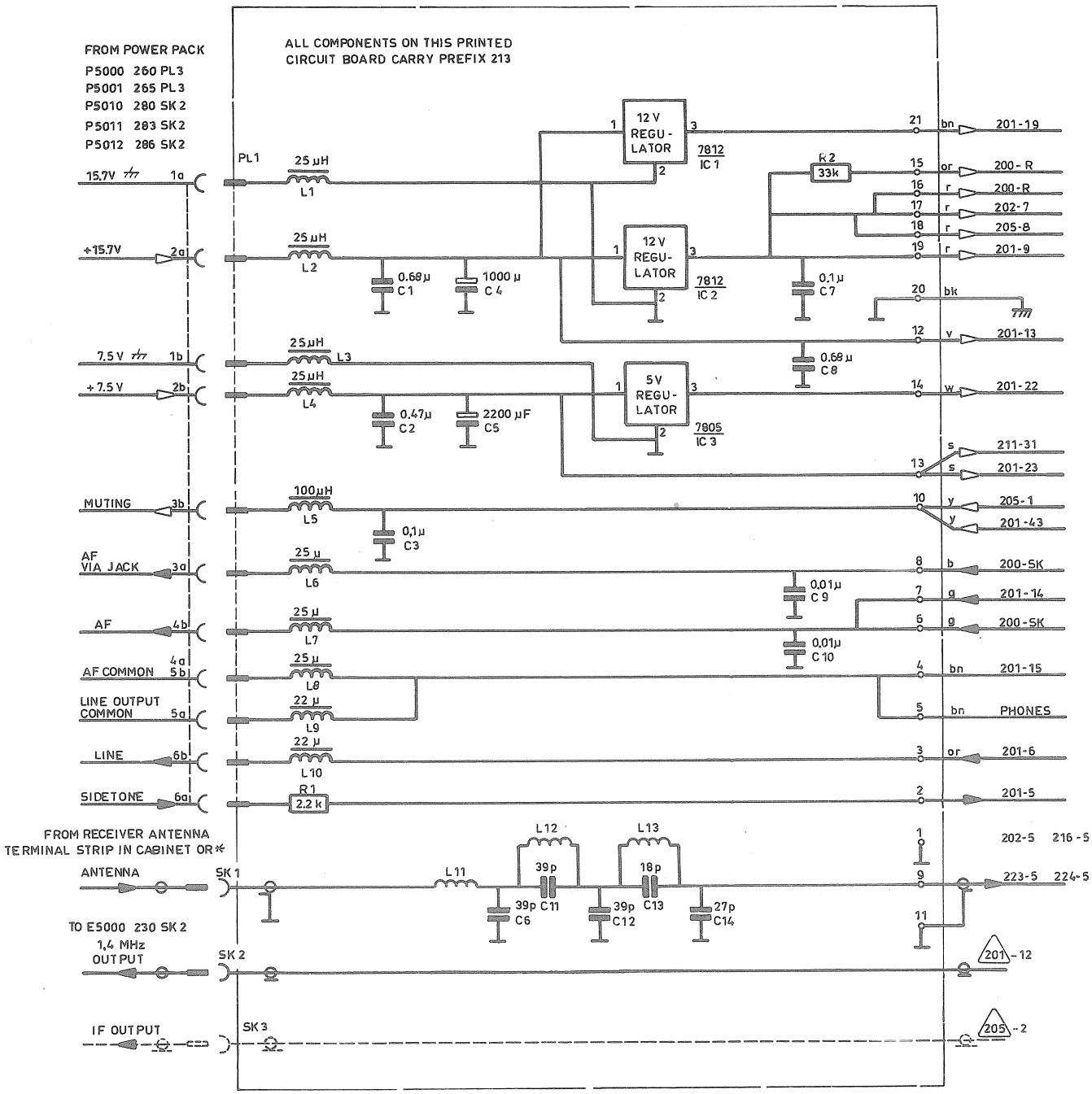

* P5010 280 PL1
P5011 283 PL1
P5012 286 PL1

b	blue
be	beige
bk	black
bn	brown
g	green
or	orange
p	pink
r	red
s	slate (grey)
v	violet
y	yellow
w	white

7805
7812

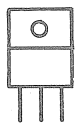

TOP VIEW

FILTERBOARD 213

995 214 8 3

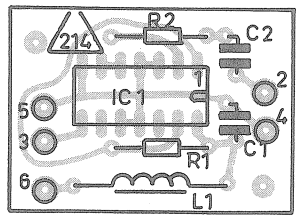

PRINTED CIRCUIT BOARD 214
VIEWED FROM COMPONENT SIDE

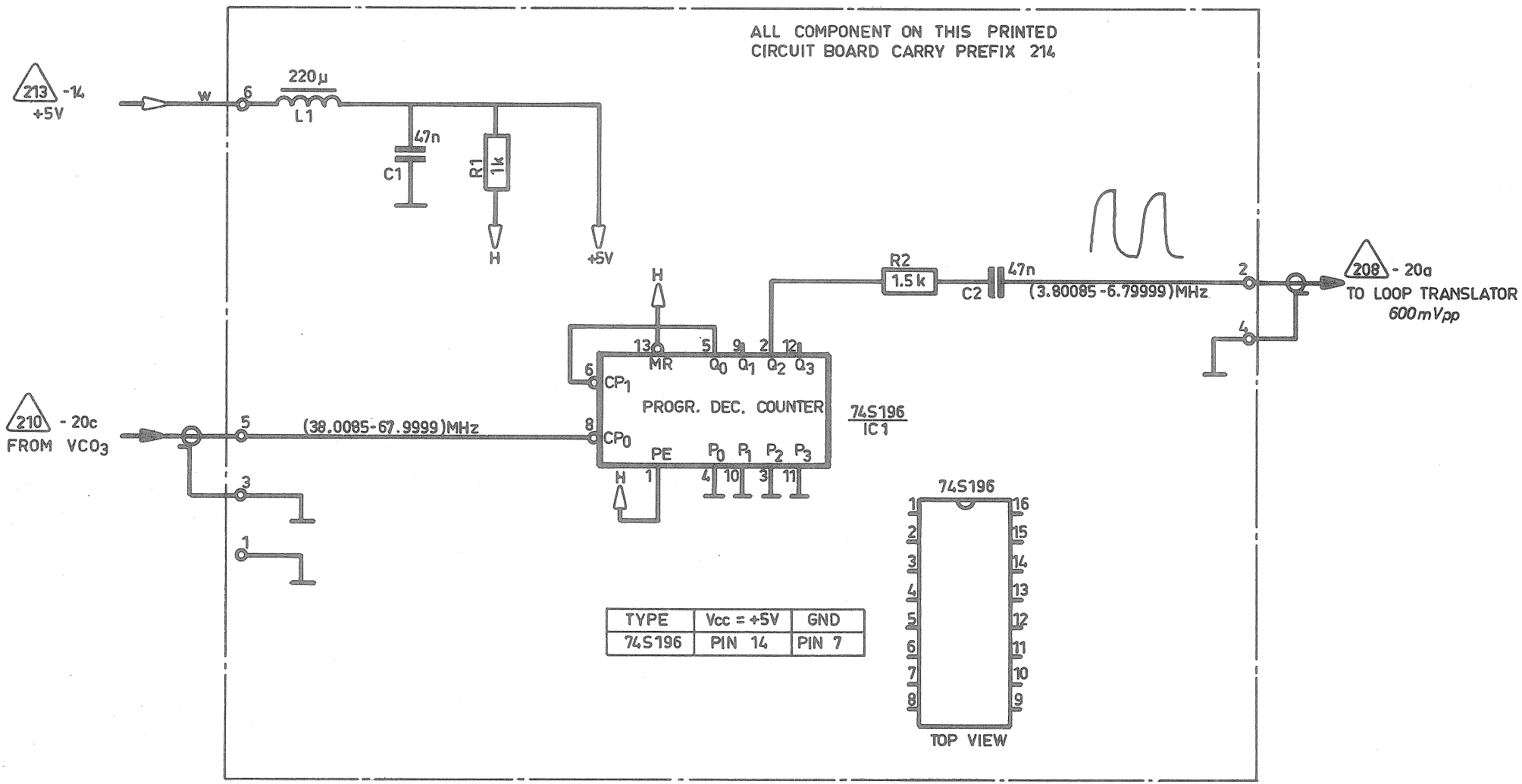

995 226 8(2)

LOOP 3 - DIVIDER 214

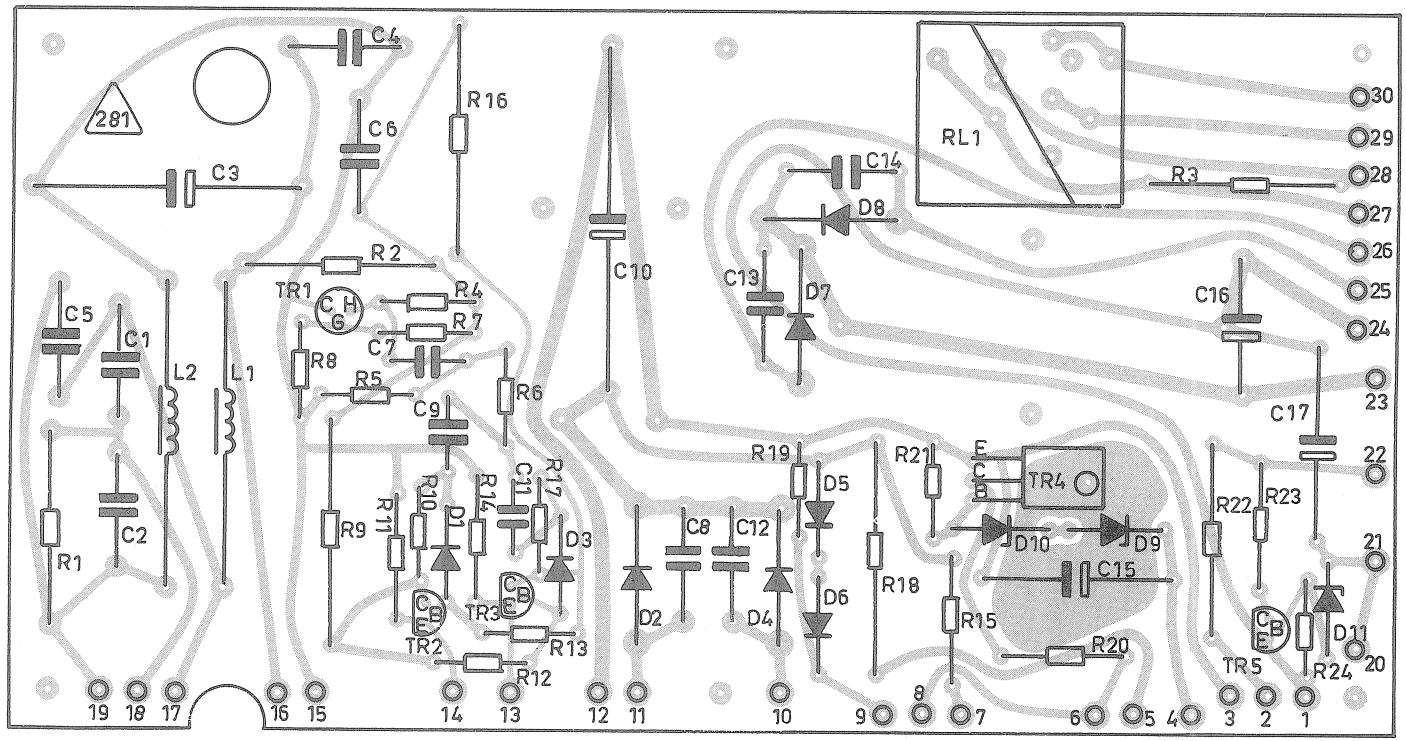

PRINTED CIRCUIT BOARD 281

VIEWED FROM COMPONENT SIDE

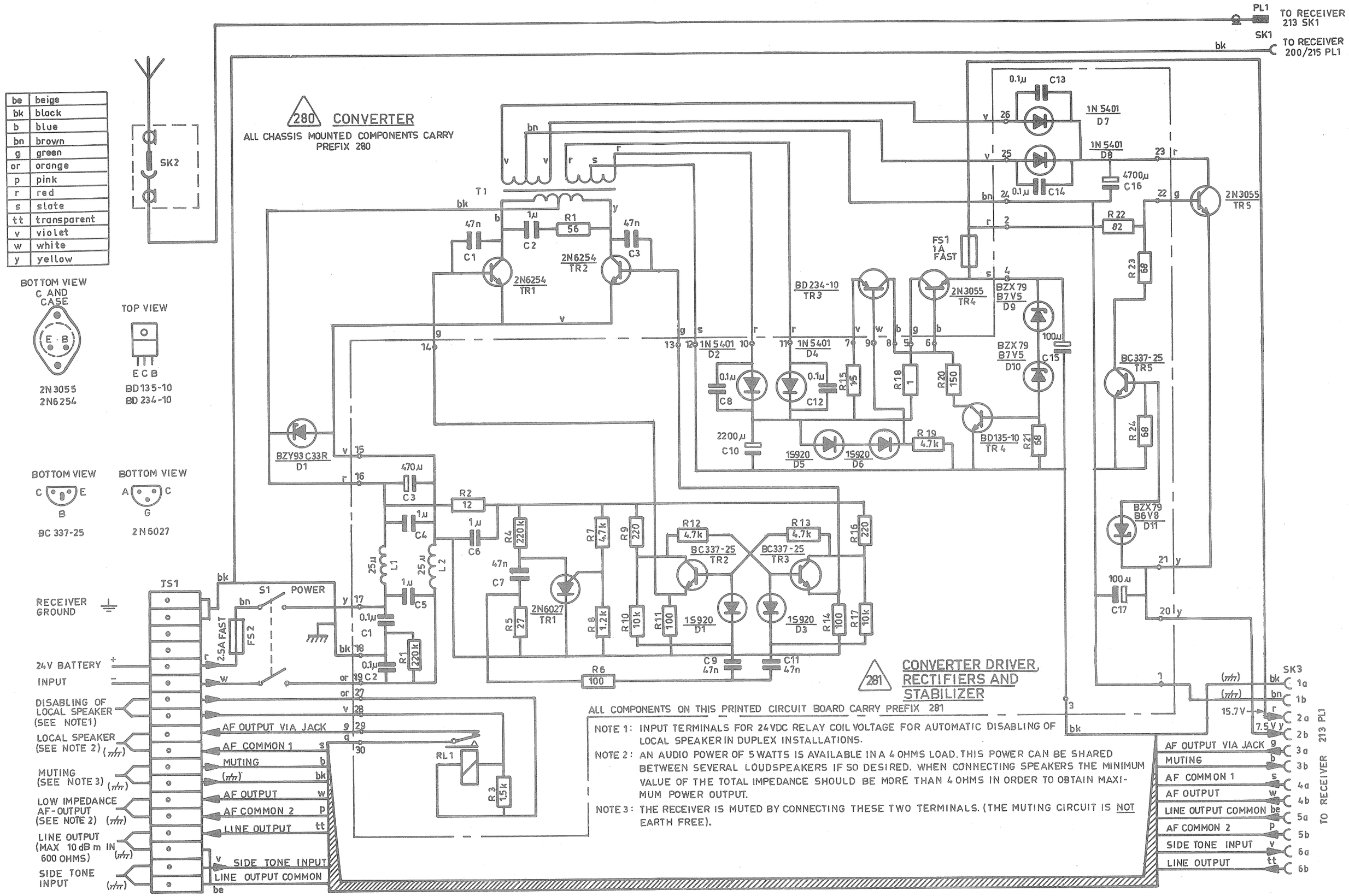

P5010 DC POWER PACK WIRING DIAGRAM

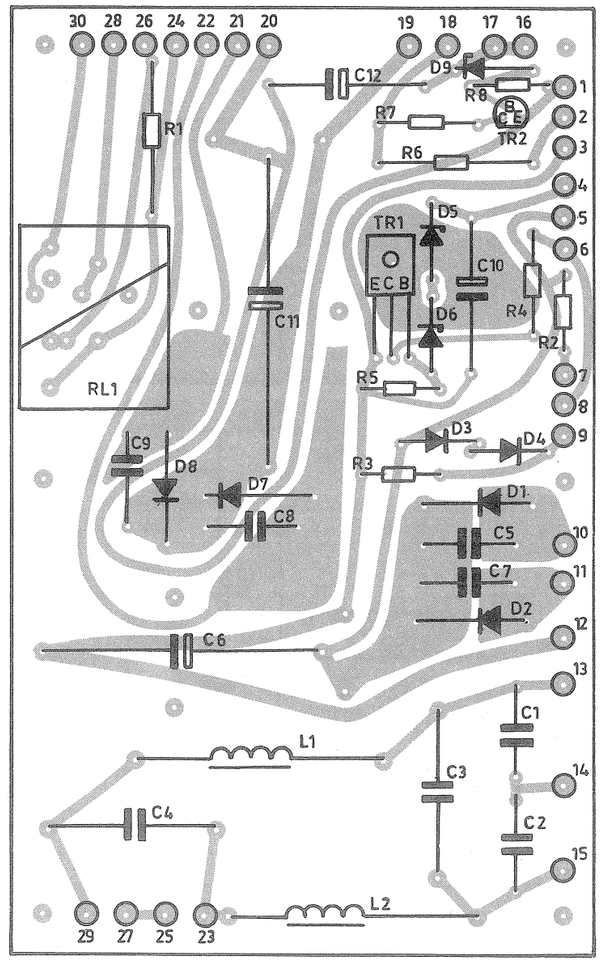

994 206 81

PRINTED CIRCUIT BOARD 284
VIEWED FROM COMPONENT SIDE

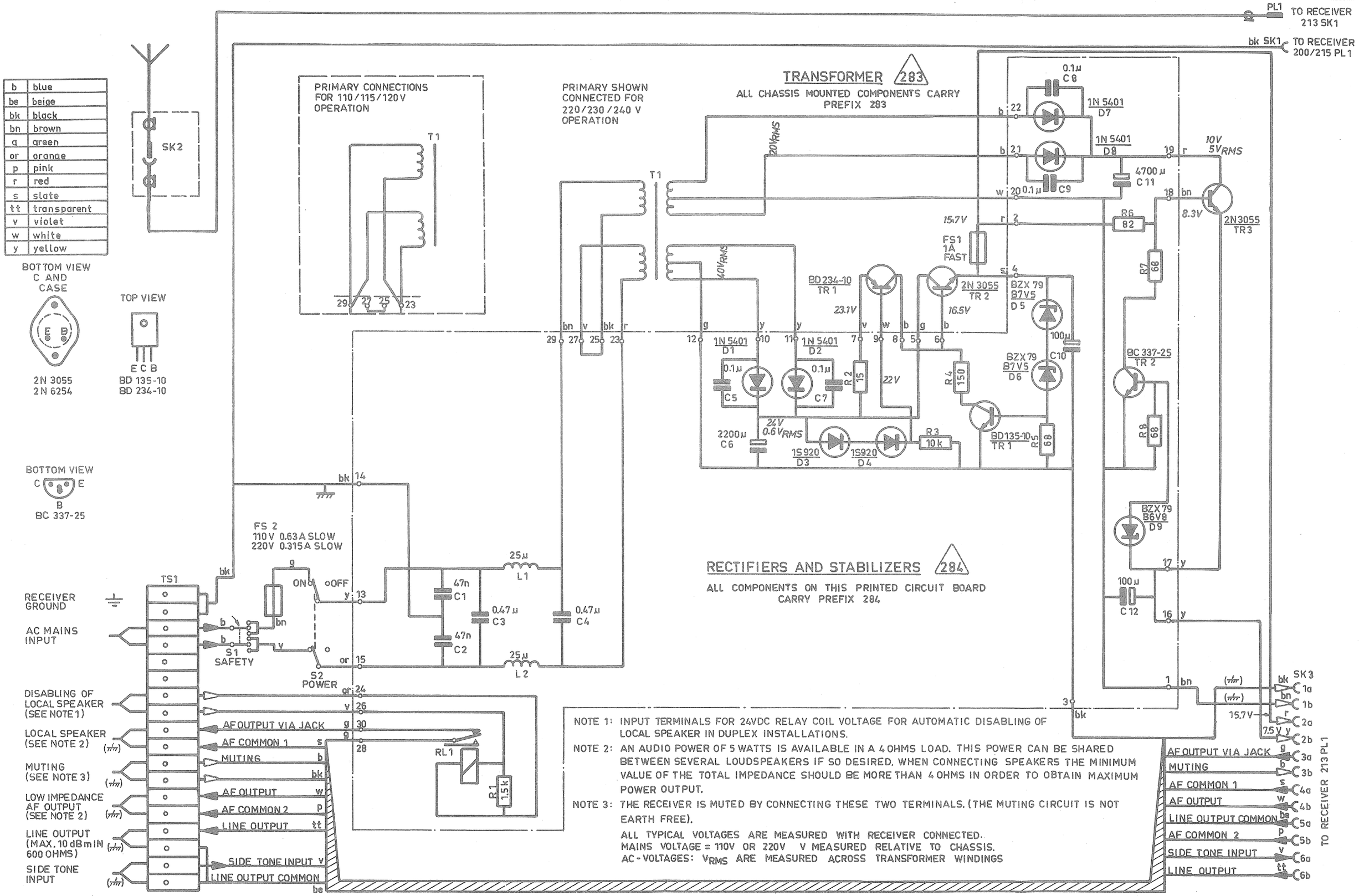

NOTE 1: INPUT TERMINALS FOR 24VDC RELAY COIL VOLTAGE FOR AUTOMATIC DISABLING OF LOCAL SPEAKER IN DUPLEX INSTALLATIONS.

NOTE 2: AN AUDIO POWER OF 5 WATTS IS AVAILABLE IN A 4 OHMS LOAD. THIS POWER CAN BE SHARED BETWEEN SEVERAL LOUDSPEAKERS IF SO DESIRED. WHEN CONNECTING SPEAKERS THE MINIMUM VALUE OF THE TOTAL IMPEDANCE SHOULD BE MORE THAN 4 OHMS IN ORDER TO OBTAIN MAXIMUM POWER OUTPUT.

NOTE 3: THE RECEIVER IS MUTED BY CONNECTING THESE TWO TERMINALS. (THE MUTING CIRCUIT IS NOT EARTH FREE).

ALL TYPICAL VOLTAGES ARE MEASURED WITH RECEIVER CONNECTED.
MAINS VOLTAGE = 110V OR 220V V MEASURED RELATIVE TO CHASSIS.
AC-VOLTAGES: V_{RMS} ARE MEASURED ACROSS TRANSFORMER WINDINGS

P5011 AC POWER PACK WIRING DIAGRAM

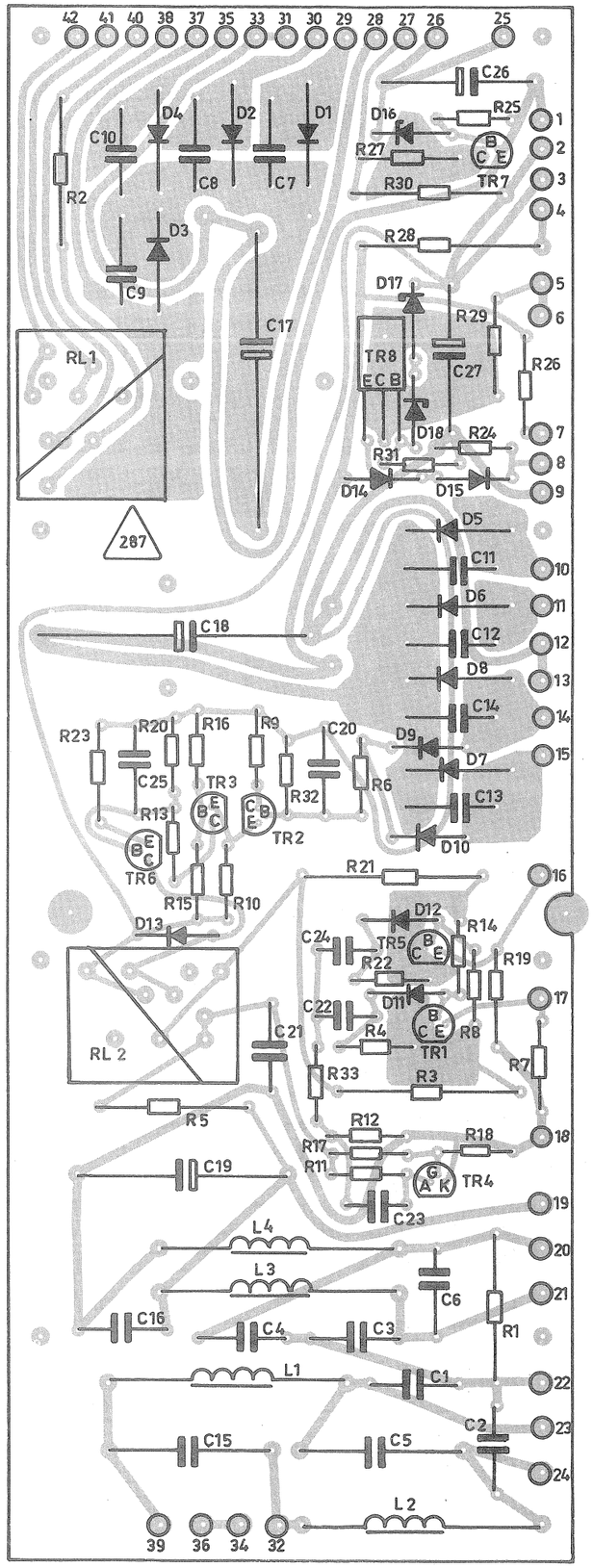

PRINTED CIRCUIT BOARD 287
VIEWED FROM COMPONENT SIDE

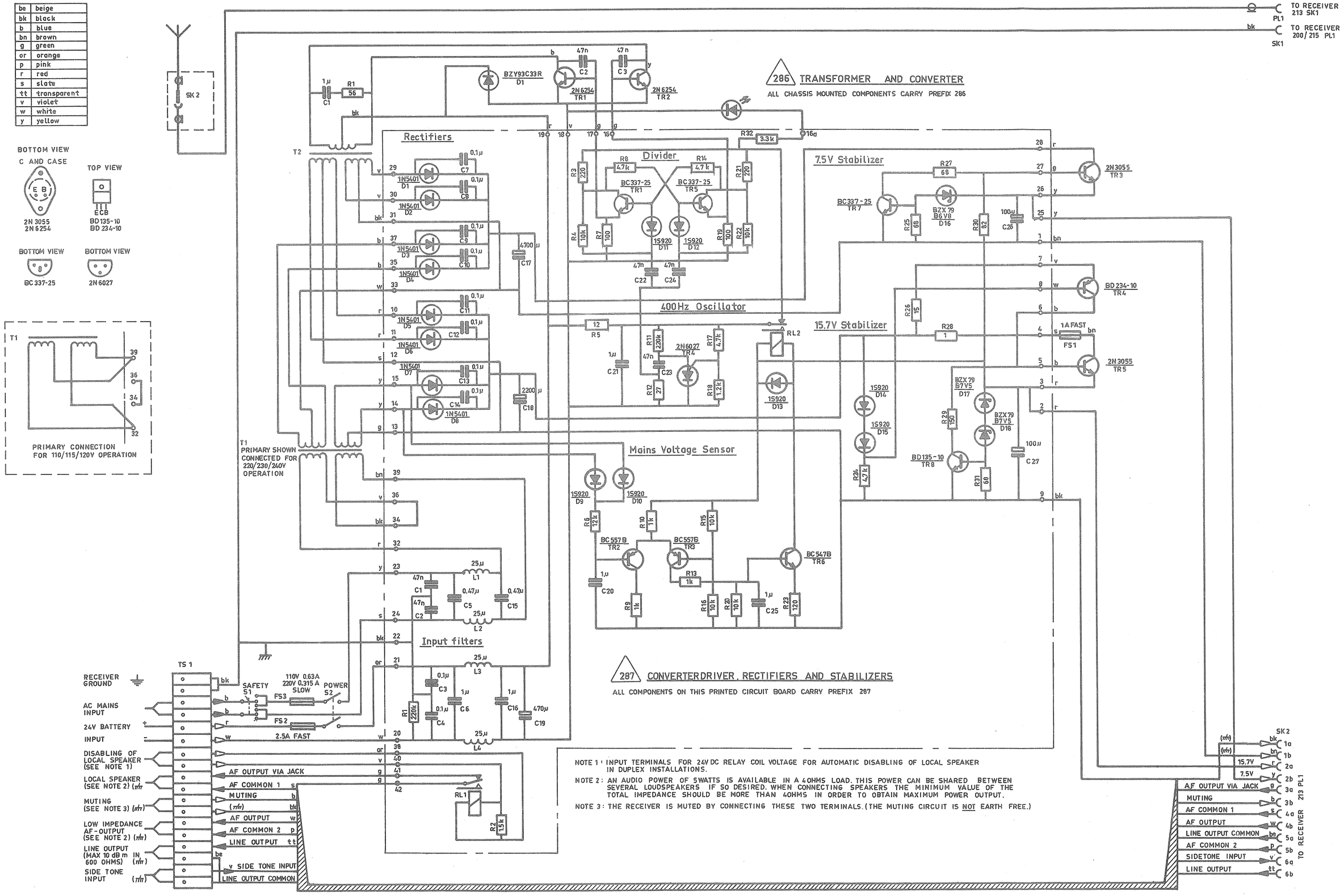

994 210 9②

P5012 24V DC/AC POWER PACK

WIRING DIAGRAM