skanti

INSTRUCTION MANUAL

SSB RECEIVER
Type R5001S

AND POWER PACK P5013S

skanti

R 5001S INSTRUCTION MANUAL

Skandinavisk Teleindustri Skanti A/S
34, Kirke Værløsevej – DK 3500 Værløse – Denmark

PHONE: + 45 2 48 25 44 . CABLE: SKANTIRADIO, COPENHAGEN
TELEX: 37292 SKANTI DK

NOTICE

All information contained in this Manual including all drawings, specifications, data or other material, is the property of Skandinavisk Teleindustri Skanti A/S, is disclosed in confidence for use only in operating and maintaining the equipment described herein, is not to be copied and is not to be used or disclosed for any other purpose, without written consent of Skandinavisk Teleindustri Skanti A/S.

COPYRIGHT © 1980 BY SKANDINAVISK TELEINDUSTRI SKANTI A/S

R 5001 Version S-1, S-2 and P 5013 Version S-1, S-2

I N S T R U C T I O N M A N U A L

CONTENTS

1. INTRODUCTION 1-1

2. OPERATING INSTRUCTIONS 2-1

2.1. Tuning to 500 kHz and 2182 kHz 2-1
2.2. Tuning to an A1, F1 or SSB Station in the Preselector Range 2-1
2.3. Tuning to an F1 or SSB Station in the Duplex Ranges 2-1
2.4. Tuning to an AM Station 2-2
2.5. Operating Controls and Their Functions 2-2

3. INSTALLATION 3-1

3.1. Disassembling the Receiver 3-1
3.2. Connection to the Permanent Installation 3-1
3.3. Earth Connection 3-1
3.4. Antenna 3-1
3.5. Exchanging the Input Impedance 3-1
3.6. Remote Speaker 3-2
3.7. Muting 3-2
3.8. External Master Oscillator 3-2

4. TECHNICAL DATA 4-1

5. TECHNICAL DESCRIPTION 5-1

5.1. Mechanical 5-1
5.2. Circuit Description, General 5-1
5.3. Circuit Summary, Signal Path 5-1
5.4. Circuit Description, Signal Path Boards 5-2
5.5. Circuit Summary, Frequency Synthesizer 5-4
5.6. Circuit Description, Frequency Synthesizer 5-5
5.7. Circuit Summary, Frequency Selection 5-8
5.8. Circuit Description, Frequency Selection 5-8
5.9. Circuit Summary, P 5013, 24V DC/AC Power Pack 5-10
5.10. Circuit Description, P 5013, 24V DC/AC Power Pack 5-10

6. SIMPLE SERVICE

6.1. Incorrect Operation 6-1
6.2. Battery 6-1
6.3. Replacement of Fuses 6-1

7. REPAIR AND ALIGNMENT

7.1. Introduction 7-1
7.2. Cross Slot Screws 7-1
7.3. Locating Subunits and Components 7-1
7.4. Locating Faults 7-1
7.5. Test Points 7-1
7.6. AC Voltages 7-2
7.7. DC Voltages 7-2
7.8. Typical Sensitivity Levels 7-2
7.9. Adjustments 7-2
7.10. Realignment of Input Filters 216 7-3
7.11. 203 S Realignment of 2nd Mixer and Clarifier Oscillator 7-6
7.12. 205 Realignment of IF Amplifier Detector and AGC 7-6
7.13. 220 M, 220 S Realignment of AF Amplifier 7-7
7.14. 220 M, 220 S Frequency Adjustment of the TCXO 7-7
7.15. 209 Realignment of VCO_1 and VCO_2 7-7
7.16. 208 Realignment of Loop Translator 7-8
7.17. 210 Realignment of VCO_3 7-9

8. PARTS LISTS AND CIRCUIT DIAGRAMS 8-1

8.1. Numbering 8-1
8.2. Switches 8-1
8.3. Terminals 8-1
8.4. Voltages 8-1
8.5. Test Points 8-1
8.6. Symbol Explanation 8-1
8.7. Abbreviations 8-4
8.8. Parts List 8-5
8.9. Diagrams 8-46

LIST OF ILLUSTRATIONS

	Page
Front panel and Operatings Controls	1 - 2
Location of Circuit Boards	8 - 45

LIST OF DIAGRAMS

Block Diagram, Signal Path	8 - 46
Block Diagram, Frequency Synthesizer	8 - 47
Block Diagram, Frequency Selection	8 - 48
Block Diagram, P 5013 24V DC/AC Power Pack	8 - 49
M 215 Wiring Diagram R 5001 S-1, S-2	8 - 51
213 Filterboard	8 - 53
216 Input Filters	8 - 55
221 38 MHz Filter	8 - 57
S 203 2. Mixer	8 - 59
M 217 IF Filters	8 - 61
205 IF Amplifier Detector and AGC	8 - 63
M 220 , M 220 AF Amplifier	8 - 65
207 Frequency Dividers	8 - 67
208 Loop Translator	8 - 69
209 VCO_1 and VCO_2	8 - 71
210 VCO_3	8 - 73
211 Display and Keyboard	8 - 75
212 Synthesizer Control	8 - 77
214 Loop 3 Divider	8 - 79
228 Noise Generator	8 - 81
293 3 MHz Lock	8 - 83
Power Pack Wiring Diagram P 5013	8 - 85

1. INTRODUCTION

1.1. The R 5001 marine and general purpose receiver is designed for use in a marine main radio station. The receiver has synthesized operation in the frequency range 10 kHz to 29,999.9 kHz.

The receiver is designed for reception of type F1, A1, A2, A2H, A3, A3H and upper-sideband A3A and A3J signals. It is fully transistorized, and widespread use is made of integrated circuits. These features, in connection with the fact that no crystal ovens are used, cause the receiver to be ready for operation immediately after having been switched on.

The receiver can be powered from a 24V battery and/or from AC voltages normally occurring in practice.

The dimensions match a 19-inch standard rack.

Because we are constantly processing the experience gained during the production and operation of our equipment, it is possible for minor modifications to occur relative to the information given in this instruction manual. Wherever practicable, however, any corrections will be listed on a correction sheet at the back of the front cover of this manual.

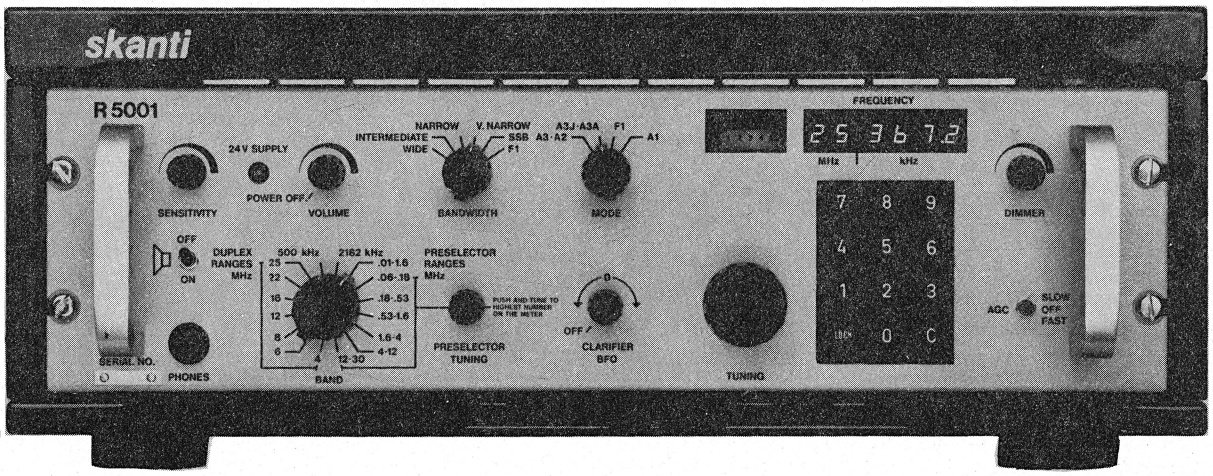

FRONTPANEL AND OPERATING CONTROLS
R5001 S

2. OPERATING INSTRUCTIONS

2.1. Tuning to 500 kHz and 2182 kHz

1. Set BAND-switch to 500 kHz or 2182 kHz
2. Turn SENSITIVITY fully clockwise
3. Adjust VOLUME for a convenient volume.

NOTE: When the BAND-switch is set to 500 kHz or 2182 kHz the mode A3, A2-AGC ON is automatically selected, and the MODE-switch can therefore be set to any position.

2.2. Tuning to an A1, F1 or SSB Station in the Preselector Range

1. Set BAND-switch to the desired band
2. Set MODE-switch to A1, F1 or A3J/A3A and switch the AGC on
3. Set BANDWIDTH switch to the desired bandwidth
4. Turn SENSITIVITY fully clockwise
5. Adjust VOLUME for a convenient volume
6. Select the desired frequency with the keyboard
7. Push and turn PRESELECTOR for maximum deflection on the built-in meter.
8. Adjust CLARIFIER/BFO for natural-sounding speech, when the desired station is modulated.

NOTE: Under certain circumstances it can be advantageous to use manual gain control of the receiver either in addition to the automatic gain control or with the automatic gain control switched off. This is done by turning the SENSITIVITY control anticlockwise until best reception is obtained and has the effect of reducing background noise coming up in speech pauses.

2.3. Tuning to an F1 or SSB Station in the Duplex Ranges

1. Set BAND-switch to the desired HF-band
2. Set MODE-switch to F1 or A3J/A3A and switch the AGC ON.
3. Set BANDWIDTH-switch to the desired bandwidth
4. Turn SENSITIVITY fully clockwise
5. Adjust VOLUME for a convenient volume
6. Select the desired frequency with the keyboard
7. Adjust CLARIFIER for natural-sounding speech when the desired station is modulated.

Note: Under certain circumstances it can be advantageous to use manual gain control of the receiver either in addition to the automatic gain control or with the automatic gain control switched off. This is done by turning the SENSITIVITY control anticlockwise until best reception is obtained and has the effect of reducing background noise coming up in speech pauses.

2.4. Tuning to an AM Station

1. Set BAND-switch to the desired band (use the LP-filter 0.1-1.6 MHz or one of the Preselector Bands)

2. Set MODE-switch to A3.A2 and switch the AGC ON

3. Turn SENSITIVITY fully clockwise

4. Adjust VOLUME for a convenient volume

5. If the exact frequency of the station is known, select this with the keyboard. Otherwise select a nearby frequency with the keyboard and use the TUNING control to find the desired station

6. Adjust PRESELECTOR for maximum level if one of the Preselector Bands is used.

2.5. Operating Controls and their functions

SENSITIVITY	Manual adjustment of receiver RF gain
VOLUME	Manual adjustment of receiver AF gain. This control also functions as main switch. The 24 Volts supply indicator indicates only that the AC supply is missing and the receiver is powered from the battery.

The MODE-switch as four positions:

A3.A2	Reception of double and single-sideband modulation with full carrier.
A3J.A3A	Reception of single-sideband modulation with suppressed or reduced carrier.
F1	Reception of telex signals.
A1	Reception of unmodulated signals. The BFO is automatically switch on.

The BANDWIDTH switch has six positions:

WIDE

INTERMEDIATE

NARROW

V. NARROW

SSB

F1

DIMMER	Varies the illumination of the meter and the brightness of the display between full intensity and light extinguished.
ON/OFF	Disconnects the local speaker.
PHONES	Connection for headphones. Disconnects the local speaker.

The BAND-switch has 16 positions:

500 kHz	Fixed tuned bandpass filter.
2182 kHz	Fixed tuned bandpass filter.
.01-1.6 MHz	Low pass filter.
.06-.18,.18-53, .53-1.6, 1.6-4, 4-12, 12-30 MHz	Tunable bandpass filters.
4, 6, 8, 12, 16, 22, 25 MHz	Fixed tuned bandpass filters, covering the maritime HF duplex and telex frequencies.
PRESELECTOR TUNING	Tuning control for the tunable bandpass filters.
CLARIFIER BFO	For accurate tuning to frequency in SSB reception and for producing an audio frequency note when receiving signals of class A1 emissions. In the OFF position the clarifier/BFO is disabled and the receiver is in a high stability mode. OFF position is not to be used in A1 mode.
TUNING	For continuous tuning of the receiving frequency in 100 Hz steps.
KEYBOARD	For selection of the wanted receiving frequency. The C key clears the display, while the LOCK key disables the TUNING knob.

3. INSTALLATION

Correct installation of the equipment is important for good results. Antenna and earth connections must be installed with the greatest care, especially where duplex telephony is desired.

3.1. Disassembling the Receiver

To open the receiver, remove the four front panel screws. Pull the chassis out of the cabinet and remove the connectors. The power pack is mounted behind the receiver.

3.2. Connection to the Permanent Installation

Check that the power pack is set for the correct mains voltage. Cable connections for installation of the R 5001 appear on the drawings on page 8-85.

3.3. Earth Connection

The receiver earth terminals are located beside the antenna connector and should be connected to earth using a length of 2.5 sqmm wire. This wire should be connected to a separate earth screw, which must not be shared by any other equipment. The earth lead should be run as far from the transmitter earth lead as is practicable.

Other cables should be run as far away from the receiver earth leads as possible and under no circumstances parallel with it, closer than 0.2m.

3.4. Antenna

Length: 7-30 metres. The receiving antenna should be brought in by a length of coaxial cable, which should be as short as possible, especially in the case of short antennas.

In order to minimize duplex noise, the transmitting and receiving antennas should be kept as far away from each other as possible. Stays, wires, steel masts etc. should either be earthed effectively or isulated.

Likewise in order to minimize duplex noise, every other electrical installation such as cable braidings (screens) and instruments should be earthed effectively, and the instruments in question should be fitted with noise-interference suppression devices.

The Antennas should be suspended well in the clear, away from objects whose influence on the antennas may vary, such as derricks etc. Insulators should be of the best type having low leakage even when wet.

3.5. Changing the Input Impedance

The input impedance of the four bands in the PRESELECTOR RANGES 0.06-0.18 MHz, 0.18-0.53 MHz, 0.53-1.6 MHz and 1.6-4 MHz can be altered, if so desired from a high level to a low level (50 ohm).

BAND	HIGH IMPEDANCE	LOW IMPEDANCE (50 ohm)
0.06-0.18 MHz	Terminals 216-25 and 216-24 connected	Terminals 216-25 and 216-23 connected
0.18-0.53 MHz	Terminals 216-16, 216-17 and 216-18 connected	Terminals 216-16 and 216-15 connected
0.53-1.6 MHz	Terminals 216-11, 216-12, 216-13 and 216-14 connected	Terminals 216-12 and 216-10 connected
1.6-4 MHz	Terminals 216-21, 216-19 and 216-20 connected	Terminals 216-21 216-19 and 216-22 connected

3.6. Speakers

An audio power of 4 watts is available in a 4 ohms load connected to terminal 5 and 6 in the multiwire socket on the back of the power pack. This power can be shared between several loudspeakers if so desired. When connecting speakers the minimum value of the total impedance should be more than 4 ohms in order to obtain maximum power output.

3.7. Muting

When terminals 13 and 14 in the multiwire socket on the back of the power pack are connected together the receiver is muted.

3.8. External Master Oscillator (R 5001 Version S-1 only)

By removing resistor 220R1 and connecting the coaxcable as shown on diagram M 220 page 8-65, it is possible to connect an external master oscillator to the 213 SK2 socket.
The master oscillator must deliver 11.2 MHz 140 mV rms in 50 ohms sinus, no DC-path.

4. TECHNICAL DATA

4.1. Receiver R 5001, version S-1 and S-2

Frequency Range:

Synthesized operation from 10 kHz to 29.9999 MHz

Frequency Presentation:

Fully digital read-out.

Modes of Operation:

A1, A2, A2H, A3, A3H, A3J and F1. Simplex, semiduplex and duplex with built-in duplex filters.

Selectivity:

Wide:	6 dB at +/- 4 kHz, 60 dB at +/- 17.5 kHz
Intermediate:	6 dB at +/- 1.2 kHz, 60 dB at +/- 1.9 kHz
Narrow:	6 dB at +/- 0.5 kHz, 60 dB at +/- 3.5 kHz
Very narrow:	6 dB at +/- 0.1 kHz, 60 dB at +/- 2 kHz
SSB:	6 dB at 350 and 2700 Hz
SSB:	60 dB at -400 and +3400 Hz
F1:	6 dB at +/- 400 Hz, 60 dB at +/- 850 Hz

Sensitivity:

Connection made for high input impedance

		Max. input for 10 dB SINAD
0.1-1.6 MHz	A1	4 uV
	A2, A2H, A3	18 uV
1.6-4 MHz	A1, A3A, A3J, F1	1 uV
	A2, A2H, A3, A3H	4 uV

Connection made for low input impedance (50 ohm)

0.1-1.6 MHz	A1	2 uV
	A2, A2H, A3	9 uV
1.6-4 MHz	A1, A3A, A3J, F1	0.5 uV
	A2, A2H, A3, A3H	2.5 uV
4-30 MHz	A1, A3A, A3J, F1	0.5 uV
	A2, A2H, A3, A3H	2.5 uV

Audio-Output:

10 mW to phones (400 ohms)
4 W to loudspeaker(s) (4 ohms)
10 dBm to line (600 ohms)

External Master: (R 5001 Version S-1 only)

11.2 MHz sinus
140 mV RMS in 50 ohms (no DC-path)

Supply Voltage:

24V battery and/or 110/115/120 or 220/230/240 single - or two phase AC 50-60 Hz with P 5012 Power Pack.

Supply Voltage Variations:

DC: -10 to +30 %
AC: +/- 10%

Consumption:

24V battery:	approx. 2A
AC mains:	approx. 45 VA

The duplex filters bandwidth:

"4 MHz"	-1 dB at 4355 kHz and 4445 kHz
"6 MHz"	-1 dB at 6500 kHz and 6596 kHz
"8 MHz"	-1 dB at 8710 kHz and 8840 kHz
"12 MHz"	-1 dB at 13100 kHz and 13350 kHz
"16 MHz"	-1 dB at 17230 kHz and 17830 kHz
"22 MHz"	-1 dB at 22570 kHz and 23430 kHz
"25 MHz"	-1 dB at 25300 kHz and 26300 kHz

Dimensions:

Rack-mounted:	Height	132.5 mm
	Width	482 mm
	Depth into rack	390 mm (connectors excl.)
	Weight	15.2 kg

5. TECHNICAL DESCRIPTION

5.1. Mechanical

The receiver is built on a rugged zinc plated and passivated iron chassis.

The receiver contains 14 printed circuit boards. Six of these: /207\, /208\, /209\, /210\, /212\ and /M 220\ or /S 220\ are plug-in boards which are placed in a special screened box at the right hand side of the receiver chassis and contains circuits for the AF-amplifier and the synthesizer. The rest of the circuit boards except /211\, /213\ and /228\ are housed in five screening cans. The can at the left hand side of the top compartment contains the 2nd mixer /S 203\ and the IF-amplifier /205\ while the can in the middle contains the IF-filters /M 217\. In the bottom compartment, the screening can contains the input filters and 1st mixer /216\. Finally, in the front compartment behind the front panel, switches are located together with the display and keyboard /211\, the filter board /213\ and the noise generator /228\. This compartment also contains the loop 3-divider /214\ and the 3 MHz lock /293\ in their separate screening cans. The front panel is electrically insulated from the chassis. This feature permits connecting the chassis to a separate earth when the receiver is mounted in the same rack with a transmitter.

5.2. Circuit Discription, General

Each of the printed circuit boards and also the chassis mounted components in this equipment have been allocated an identification number between /201\ and /293\. The designation of a component or terminal includes this number as a prefix, e.g. 213R3 (resistor R3 on board /213\) or 213-3 (terminal No. 3 on board /213\).

For convenience in this section and on the circuit diagrams the prefix is omitted except where there is a risk of ambiguity.

The circuit diagram is divided into a wiring diagram on page 8-41 showing interconnections between the printed circuit boards, and circuit diagrams of the individual printed circuit boards. The mode of operation follows the block diagrams on pages 8-46, 8-47 and 8-48 showing the signal path, the frequency synthesizer and the frequency selection, respectively.

5.3. Circuit Summary, Signal Path

The incoming signal is fed via a low-pass filter on board /213\ and BAND switch on board /216\ to the RF Input Filters. The board also contains the 1st mixer stage that converts the input signal frequency to the 1st intermediate-frequency 38 MHz by mixing it with a signal from the Frequency Synthesizer. Before leaving the board the intermediate-frequency signal passes a crystal filter which determines the double-sideband selectivity of the receiver.

The 1st intermediate-frequency signal is fed to the 38 MHz Bandpass Filter /221\ where spurious responses, if any, are further attenuated. The signal is passed on to the 2nd mixer on board /S 203\, where it is converted to the 2nd intermediate-frequency, 1.4 MHz by mixing it with a signal derived on basis of the 11.2 MHz TCXO on board /M 220\ or /S 220\ and the 3 MHz clarifier oscillator signal on board /S 203\.

The 2nd intermediate-frequency signal is fed to the IF-filters on board /M 217\. The selection of the desired filter is carried out by the BANDWIDTH switch.

On the IF-Amplifier board 205 the signal is amplified and detected and the audio frequency output is fed to the VOLUME control via an active low-pass filter.

The audio-frequency signal is amplified on plug-in board M 220 or S 220 which also contains the line-amplifier and TCXO.

5.4. Circuit Description, Signal Path Boards

5.4.1. 216 Input Filters

The PRESELECTOR RANGES consist of six bands, each tuned with the variable capacitor C5. The 3 bands from 0.06 MHz to 1.6 MHz consist of the coils T11, T12 and T13 and associated components. The 3 bands from 1.6 MHz to 30 MHz consist of six coils which two by two, together with the remaining components, constitute a double band-pass filter. The 2 bands, .18 - .53 MHz and 1.6 MHz - 4 MHz are, in the positions 500 kHz and 2182 kHz fixed tuned with capacitors C3 and C1, C2, C4, C6 respectively. In the DUPLEX ranges all circuits are fixed tuned. The seven DUPLEX filters comprise three tuned circuits, and their selectivity is high to provide effective attenuation of ones own transmitter. All the filters in the PRESELECTOR and the DUPLEX range have a balanced output for the mixer.

For the 0.01 - 1.6 MHz range there is a low pass filter consisting of L4 and C46.

Switching of the filter outputs is performed by a DC voltage which controls the diode switches at the balanced filter outputs.

The 1st mixer, which is double balanced, consists of the matched field effect transistors TR1, TR2, TR3 and TR4. The 38 MHz output is fed to the 2nd mixer via a 38 MHz crystal filter.

5.4.2. S 203 2nd Mixer

This board contains the 2nd mixer, the clarifier oscillator and mixer and finally a 38 MHz input attenuator.

The 2nd mixer consists of field effect transistors TR5 and TR7. The 1.4 MHz output is connected to the IF-Filter board M 217. The injection signal for the 2nd mixer is obtained by mixing a 33.6 MHz and a 3 MHz signal in the integrated circuit IC1. The 33.6 MHz signal is derived from the TCXO on board M 220 or S 220, while the 3 MHz signal is obtained by using TR1 as a crystal oscillator. The frequency of the 3 MHz oscillator can be varied from the CLARIFIER control by means of the variable capacitance diode D1-4.When the CLARIFIER control is set to off position the control is out of circuit and the 3 MHz signal is faselocked to the TCXO by means of the 3 MHz Lock board 293 in order to obtain the maximum stability of the receiver. The 36.6 MHz output from IC1 is filtered and amplified in TR4 before being applied to the 2nd mixer. The 38 MHz input attenuator consists of the PIN-diode D5 and associated components. The current in the PIN-diode is controlled by TR6, the base of which is connected to the AGC-voltage on board 205. The 38 MHz input frequency is stepped up in a transformer before being applied to the mixer input.

5.4.3. M 217 IF-Filters

The IF-Filters consist of four 1.4 MHz crystal filters and a 1.4 MHz WIDE filter consisting of the coils L1 and L2 and the capacitors C2, C9 and C11. The selection of the correct filter is made by the BAND-WIDTH switch which controls the diode switches at the filter input and output.

When the BAND Switch is in position 500 kHz or 2182 kHz the 1.4 MHz WIDE filter is automatically selected.

5.4.4. 205 IF-Amplifier, Detector and AGC

The IF-amplifier consists of transistors TR1 and TR2. A 1.4 MHz Band-pass filter connects the amplifier to the signal detector IC1. This integrated circuit contains a balanced mixer and a high-gain limiting amplifier. The signal voltage is applied balanced to the one input port of the mixer, terminals 7 and 9, of the integrated circuit.

When the detector works as an AM detector the signal voltage is also fed to the amplifier input terminal 14, via D 12. This signal is amplified and clipped to constant amplitude and internally connected to the other input port of the balanced mixer where it is mixed with the modulated signal. The difference frequency, which contains the wanted AF-signal, is taken off at the mixer output, terminal 8. The AF-signal is then fed to an active low-pass filter consisting of transistor TR5 and associated components.

In the A1/F1 mode and the A3J/A3A mode D12 is blocked while D11 is conducting and the 1.4 MHz signal from the AF-amplifier, board M 220 or S 220 is now fed to the amplifier input. The mixer is working in the same manner as before except that now the 1.4 MHz signal is the re-inserted carrier.

Also the sum frequency of the input signals is present at the mixer output. This signal is used for automatic gain control and is taken off across the 2.8 MHz tuned circuit. It is amplified in TR4 and rectified in the AGC detector TR3. The current of TR3 increases for increasing signal level causing the collector voltage to drop. The collector is connected to the bases of the IF-transistors and a lower collector voltage means reduced gain in the IF-Amplifier.

The AGC time constants are determined by C2 and C8. The circuit combines a short attack time and a long decay time. The resistor R11 in series with C8, which mainly determines the decay time, prevents short noise pulses from giving a long decay time.

The gain can also be controlled manually by means of the SENSITIVITY control which in combination with the diode D1 determines the maximum collector voltage of TR3 and with that the highest available gain of the IF-amplifier.

The AGC switch switches off the AGC by disconnecting the emitter current of TR4. The base voltage of the IF transistors is then controlled only by means of the SENSITIVITY control.

5.4.5. M/220 or S/220 AF-Amplifier

The board contains the AF amplifier, the line amplifier, the BFO and the TCXO. The AF amplifier is an integrated circuit provided with a built-in thermal limiting circuit and protection against accidentals short circuit of the output. The line amplifier consists of the transistors TR1 and TR3. The BFO signal is obtained by using part of IC1 as a crystal oscillator. The frequency of the 12.6 MHz oscillator can be varied from the BFO control by means of the variable capacitance diode D3. The 12.6 MHz signal and the 11.2 MHz TCXO signal are then mixed in the integrated circuit IC1 to obtain a 1.4 MHz signal for the detector on the board/205\ The TCXO frequency 11.2 MHz is amplified in TR2 and TR6 and clipped in TR10. The signal is then divided by 8 to 1.4 MHz in the integrated circuit IC3. From the output of the divider a 1.4 MHz signal is fed to the 3 MHz Lock board /293\. Another 1.4 MHz signal from the divider is fed to the Mother Board /201\.

The TCXO frequency is amplified in TR6, TR9 and TR10,and the third harmonic is taken off in the filter consisting of coils T2, T3 and associated components. The 33.6 MHz signal is fed to the 2nd MIXER on board /S/203\.

In the /M/220\ in R 5001 version S-1 it is possible when the resistor R1 is unsoldered and the coax-cable is mounted as shown on the diagram page 8-65, to make use of an external master oscillator for improving the stability of the receiver.

5.4.6. /213\ Filterboard

The Filterboard contains three voltage regulators, IC1, IC2 and IC3. IC1 supplied 12V to the synthesizer, while IC2 supplies 12V to the other parts of the receiver. IC3 supplies 5V to the synthesizer and other logic circuits.

RF filters are inserted in the power supply, muting and AF output lines in order to suppress noise and interference on these lines.

The Filterboard also contains a low-pass filter for the aerial input, to prevent the radiation out of the receiver.

5.4.7. /228\ Noise Generator

To ease the setting of the preselector the receiver incorporates a Noise Generator.

The Noise Generator consists of a three-stage noisy amplifier generating a wideband noise.

When the preselector button is pushed the Noise Generator is switched on and connected to the Input Filters /216\. Automatically the AGC is switched on.

5.5. Circuit Summary, Frequency Synthesizer

This Frequency synthesizer consists of two programmable phase locked loops (Loop 1 and Loop 2), the outputs of which are controlling a third (Loop 3) from which the complete synthesized signal is derived and fed to the 1st mixer in the signal path.

The output frequency of Loop 1 is controlled by the 100 Hz, 1 kHz and 10 kHz information according to the contents of the displays provided the receiving mode chosen is not F1. If the F1-mode is chosen the output frequency is decreased by 30 kHz, which means that the final output frequency of the Synthesizer is decreased by 1.5 kHz.

Loop 1 produces an output frequency in 999 steps from 20.000 MHz to 21998 MHz in all modes but F1. In the F1-mode it is from 19.970 MHz to 21.960 MHz. This frequency is divided by 200 and serves as a variable reference frequency for the Loop Translator.

Independent of the different receiving modes Loop 2 is controlled by the 100 kHz, 1 MHz, and 10 MHz information according to the contents of the displays. The output frequency of this loop is variable from 3.70 MHz to 6.69 MHz in 299 steps and is fed to the mixer of the Loop Translator, where it is subtracted from the synthesizer output frequency divided by 10, and finally compared with the variable reference frequency from this loop by means of Phase/Freq. Detector 3. A Frequency Comparator ensures that the Synthesizer output frequency divided by ten is higher than the output frequency of Loop 2. If this was not the case it would lead to a stable, unlocked condition of Loop 3.

The Frequency Synthesizer is locked to a 1.4 MHz signal derived from the TCXO, so that the output frequency will exhibit exactly the same stability as specified for the TCXO.

Provided that the 3 loops are locked the following equations, where fvcoi is short for output frequency of VCOi, will become valid:

Assumption: Receiving frequency is (ab, cde.f)kHz and MODE selected not F1 .

$(fvco_3 - 10) - fvco_2 - 200)$.

$fvco_3 = 10x(fvco_2 + (fvco_1 - 200))$

where

$fvco_1 = (20000 + (d\ e\ f)\ x2)$ kHz and

$fvco_2 = (3700 + (a\ b\ c)\ x\ 10)$ kHz and

$fvco_3 = 38000.0$ kHz + a b c d e.f kHz

5.6. Circuit Description, Frequency Synthesizer

5.6.1. /207\ Frequency Dividers

There are three divider chains, their associated buffer amplifiers, and two phase/freq. detectors are located on this board.

The Reference Divider produces the 2 kHz reference frequency for the Phase/freq. Detector 1, and the 10 kHz reference signal for the Phase/Freq. Detector 2, from a 1.4 MHz signal derived from the TCXO on board /M 220\ or /S 220\

The variable divider chains are composed of programmable up-counters and their associated external gating logic. The dividing action is accomplished by presetting (programming) these counters with the data blocks corresponding to the contents in the displays, at the end of each counting cycle. The data blocks contain the BCD 9's complement code of the corresponding digit.

In the Loop 1-Divider chain the F1 information is used to control the associated external gating logic. In the F1-mode this chain counts 15 clockpulses less that in any other mode, before concluding a counting cycle, thus the contents of the data blocks are independent of the mode.

The Loop 2-Divider chain counts independent of the receiving mode and adds, by means of the external gating logic, 370 extra clock cycles to what is determined by the three most important digits, before concluding a counting cycle.

The outputs from the variable dividers are led to their respective phase/freq. detectors and are here compared to the fixed reference frequency. In case of a frequency difference the detector will produce a DC error voltage which will adjust the associated VCO to establish the wanted frequency equality.

5.6.2. /208\ Loop Translator

This circuit board contains one half of Loop 3, namely the Frequency Comparator, the 200 divider, the Loop 3 Mixer, with its associated 1.5 MHz Low-Pass Filter, and Phase/Freq. Detector 3.

The VCO_1 output frequency is divided by 200 and fed, as a variable reference frequency, to one of the two input ports of Phase/Freq. Detector 3. The output frequency of VCO_3 divided by 10 is fed to the Loop Mixer, whose other injection signal is derived from VCO_2. The sum frequency from this mixing process is removed in a 9-order 1.5 MHz Low Pass Filter, thus only allowing the difference frequency to pass on via the following Buffer Amplifier, to the other port of Phase/Freq. Detector 3. This detector is almost identical to the detectors mentioned in the description of board /207\.

If the VCO_2 output frequency is higher than the Synthesizer output frequency divided by 10 at the beginning of an acquisition of Loop 3, this loop will end in a stable, unlocked condition. To avoid this these two frequencies are compared. If the frequency of VCO_2 is higher then the monostable multivibrator IC13 is triggered by the latch following the two divider chains and via the Phase/Freq. Detector 3, the frequency of VCO_3 is forced to rise, thus pulling Loop 3 out of this unwanted condition.

The output pulse from the detector is smoothed by means of a simple RC-filter before leaving this circuit board.

5.6.3. /209\ VCO_1 and VCO_2

The Loop Filter and Voltage Controlled Oscillator of both Loop 1 and Loop 2 are located on this board.

Both of these filters are active 3rd order low pass types with an integrated function incorporated. The purpose of the loop filters is to remove the pulses from the output of the Phase/Freq. Detector and allow only the DC-Information to pass on to the vari-cap diodes of the Voltage Controlled Oscillators. By use of the Phase Error Adjustment potentiometer the phase error pulse width can be minimized. Once adjusted this width will remain unchanged throughout the whole frequency range of the VCO, due to the use of an integrator in the Loop Filter. Both of the VCO's are amplitude regulated.

The selection of one of the three bands, in which VCO_2 is operating, is carried out by means of a decoding circuit on /212\.

5.6.4. /210\ VCO_3

This circuit board contains the Loop 3-filter and the Voltage Controlled Oscillator VCO_3.

The Loop 3-filter consists of a 1st order low pass filter and an integrator. The filter serves to remove the pulses of the Phase/Freq. Detector output signal and allow only the DC-information to pass on to the vari-cap diodes of VCO_3. By use of the Phase Error Adjustment the phase error pulse width can be minimized, and once adjusted it will remain unchanged throughout the whole frequency range of VCO_3 due to the use of an integrator in the Loop Filter.

VCO_3 consists of three Voltage Controlled Oscillators VCO_{3x}, VCO_{3y} and VCO_{3z}, each covering a band of approximately 10 MHz. The band selection is carried out by means of a decoding circuit on /212\.

The VCO_3 output signal is amplitude regulated and serves as an injection signal to the 1st mixer in the receiver signal path.

5.6.5. /214\ Loop 3-Divider

The Loop 3-Divider divides the frequency of VCO_3 by 10; this signal is then fed to the Loop Translator.

5.6.6. /203\ 3 MHz Lock

The 3 MHz Lock consists of two dividers, a phase/freq. comparator and a filter.

The 3 MHz signal from the clarifier oscillator on board /S 203\ is divided by 15 in the divider IC2 and compared in the frequency and phase detector IC3 with the 1.4 MHz frequency derived from the TCXO on board /M 220\, /S 220\ divided in IC1 by 7.

The output from the phase/frequency detector is amplified in TR4 and filtered in the low-pass filter R18, R19 and C8 and passed on to the VCXO on board /S 203\ when the clarifier/BFO control is set in off position.

5.7. Circuit Summary, Frequency Selection

The frequency selection is performed by the two printed circuit boards /211\ and /212\.

The purpose of this unit is to control the selection of the receiving frequency, display it and control the Synthesizer output frequency in accordance with this setting.

The frequency setting can be done in the following ways:

From the Keyboard any number (the receiving frequency) less than 30.000.0 can be keyed into the displays. This number can be changed in steps of 100 Hz by means of the Tuning Wheel provided that the LOCK-Key is not activated. If the LOCK-key is activated, the Tuning Wheel will be inoperative while the Keyboard will remain operative. When the Band switch is moved to the 500 kHz or 2182 kHz positions these frequency settings will override the present setting, which is saved and will appear again when the Band switch is moved to any other position.

It is not possible to choose a number greater than 29.999.9; if such an attempt is made, the displays are automatically cleared and ready to accept a new frequency setting.

For any frequency setting less than 10.0 kHz the receiver is muted.

To display the frequency a multiplexing system is used. All the digit datas used to control the Synthesizer are present on a parallel form and in the code of BCD 9's complement right after the 500 kHz and 2182 kHz Preselection Circuits. In order to display the receiving frequency the Scan Counter selects via the Multiplexer unit, one of these digit data blocks at a time, converts it to BCD code and decodes it further to 7 segment information. This information controls a 7 segment Driver, which starts driving the appropriate digit-display, selected by the Scan Decoder. So, in fact, only one display is derived at a time but the repetition rate is so high that no flickering appears.

The Dimmer Control potentiometer is used to regulate the period of time in which the respective display is activated, thus controlling the light intensity of the displays. The light intensity of the meter is regulated simultaneously in the same manner.

The most significant digit is decoded to select the correct band of the VCO's of the Frequency Synthesizer.

5.8. Circuit Description, Frequency Selection.

5.8.1. /211\ Display and Keyboard

When a key (except for the LOCK-key) is depressed the associated key-number is partly encoded in IC1 and passed on to an additional encoder located on /212\ to complete the BCD 9's Complement encoding. Furthermore IC1 serves as an N-key lock-out unit, i.e. if one or more keys have already been depressed, it is not possible to activate the Keyboard before all depressed keys are released. If two or more keys are depressed simultaneously the lowest key-number is chosen.

The Tuning Control consists of a Tuning Wheel, two optically coupled modules, and an UP/DOWN-Control. The Tuning Wheel is a thin metal disk in which holes are etched. The two optically coupled modules sense these holes, and produce a pulse for each hole encountered. Each pulse counts up or down the displayed number, provided that the LOCK-key is not activated. The direction of this counting is controlled by IC10.

By means of the two potentiometers R26 and R27 it is possible to adjust the duty cycles of the output from the two Smith-triggers (IC9) to 50%. When the wheel is rotated the outputs will exhibit a phase difference of 90° if the optically coupled modules are correctly mounted. This is necessary to ensure proper functioning of the UP/DOWN-Control.

The heart of the multiplex system is the combined Clock Generator and Dimmer Control consisting of IC4 together with external components, of which the potentiometer regulates the duty cycle of the clock.

This Clock Generator drives the Scan Counter which again produces the Scan Address. This address decides which digit the multiplex system is to operate on. The Scan Decoder selects via a driver transistor, the appropriate digit l.e.d. display.

The multiplexed BCD-input from 212 after being decoded into the 7-segment code in IC15 decides which figure is to be shown in the display.

Two other signals from 212 control IC15. One signal derived from the multiplex clock, is fed to the RBo terminal. Due to the variable duty cycle of the multiplex clock, it is possible to control within a clock cycle the ratio between how long the outputs of IC15 are enabled and disabled, thus controlling the light intensity of the display. The other signal is a blanking control signal, which is led to the RBi terminal, completely blanking the displays that would otherwise show irrelevant zeros.

Because of the high peak currents driving the displays, the segment driving is performed by a special high current array, IC14.

The displays show the frequency in kHz and the decimal point is the only light source, which is not dimmable.

The AGC-voltage from board 205 is shown on the meter; the light intensity of the associated bulb is controlled by the Dimmer Control in the same way as the displays.

5.8.2. 212 Synthesizer Control

When a key is depressed or released there will always be some sort of bouncing effect before the key has settled. This bouncing is removed by means of the Key Bounce Eliminator consisting of IC4 and additional external gates. A load-command for the Digit Register Stack consisting of six programmable up/down-counters is generated as long as a key (except for the LOCK-key) is depressed. A clock pulse is produced when the key has settled after being activated, and the data corresponding to the key number is loaded into IC10 and simultaneously all the data present in the Digit Register Stack is shifted to the next counter.

The encoding of the key-number is completed on this board before entering the Digit Register Stack.

To clear this stack the last half of IC4 is triggered by means of the multiplex clock and, simultaneously data corresponding to key-number "0" is produced. So for each clock cycle these datas are read into the Data Register Stack.

When the Tuning Wheel is rotated a pulse is generated in the Pulse Shaper each time a hole passes the optically coupled modules on /211\ . This pulse activates the last half of the Key Bounce Eliminator which produces a counting pulse for the Digit Register Stack, thus incrementing or decremeting on /211\ . If the LOCK-key is activated, the counters IC10 and IC11 will become disabled thus making it impossible to tune the receiver in the way mentioned above, but the Keyboard will remain operative.

The outputs of the Data Register Stack are led through the 500 kHz and 2182 kHz Preselection circuits, IC16-IC21. If neither of these two Band-settings is chosen the data passes through these gates. Otherwise one of the two preselected frequency number is chosen independent of the content of the Digit Register Stack.

By means of IC29 it is tested every 8th cycle of the multiplex clock, whether the most significant digit is greater than 2 or not, if it is, then a Clear command identical to that produced by means of the Clear-key is generated through the subsequent 8th clock cycle.

The data now containing the information of the receiving frequency in BCD 9's complement is then used for two purposes. First to control the Frequency Synthesizer and second to feed the displays.

The four multiplexers select one digit data block, controlled by the Scan Address, and pass it on through a BCD 9's Complement Converter before it enters /211\ in order to become displayed there.

In order to establish a so-called leading edge zero suppression of the displayed frequency, the latch consisting of two gates from IC7 controls the blanking input of RB_1 of the BDC 7 segment decoder on /211\ . This latch is reset by clock pulse number six and seven whereby the blanking input is activated. Through the four inverters of IC31 the latch senses the first zero to come, beginning with the most significant digit. The first digit different from zero sets the latch, thus cancelling the blanking command. If all the digits are equal to zero, a puls from /211\ sets the latch on clock pulse number five, so that the least significant digit is always displayed.

In order to mute the receiver, if the receiving frequency setting is less than 10 kHz, the output from the latch mentioned above is sampled on the third clock pulse, this deciding whether the four most significant digits are all different from zero or not. If they all are equal to zero a mute command is produced.

The most significant digit is decoded in order to control the band selection of the VCO's of the Frequency Synthesizer.

5.9. Circuit Description, P 5013, 24VDC/AC Power Pack

5.9.1. 286 Transformers and Converter

A double pole mechanically operated safety switch is inserted in the AC mains input leads. The primary current of the mains transformer T1 is controlled by the front panel mounted POWER-switch.

The secondary windings of T1 are connected to two sets of rectifiers.

Input current from the battery input terminal is also controlled by the POWER-switch. An RFI-filter on board 287 is followed by Zener diode D1.

Diode D1 protects the converter against transients on the supply leads and against the consequences of polarity reversal of the battery supply leads. The converter is composed of transistors TR1 and TR2 and the square wave output signal is coupled through transformer T2 to two sets of rectifiers.

5.9.2. 287 Converter Driver, Rectifiers and Stabilizers

A bistable multivibrator composed of transistors TR1 and TR5 is driven from oscillator TR4 with the nominal frequency 400 Hz. The output signals from the multivibrator are therefore square waves with a repetition frequency of 200 Hz, and these signals having a phase difference of 180° are used as driving signals for the converter. One output signal from transformer 286T2 is fed to a double rectifier followed by a voltage stabilizer having a nominal voltage of 15.7V, while a second output signal after rectification also in a double rectifier is fed to a voltage stabilizer having a nominal output voltage of 7.5V.

A mains voltage sensor composed of transistors TR2, TR3 and TR6 controls, via RL2, the 24V converter and the 24V SUPPLY indicator.

6. SIMPLE SERVICE

6.1. Incorrect Operation

If the equipment is not functioning correctly, a check should be made that it is being operated properly. Go through adjustment procedures 2.2 to 2.4 if necessary.

6.2. Battery

The condition of the battery should be checked at frequent intervals. The battery must always be fully charged and should be topped up frequently with distilled water (liquid should rise 5 to 10 mm above the plates).

6.3. Replacement of Fuses

All fuses are located on top of the power pack which is mounted on the back of the receiver.

7. REPAIR AND ALIGNMENT

7.1. Introduction

Repairs and adjustments on the equipment should be performed only by qualified technicians, to whom this chapter is addressed. Before attempting any repairs or adjustments, a study of Chapter 5, Technical Description, is recommended.

7.2. Cross-Slot Screws

The cross-slot screws used to secure the printed circuit boards are Pozidriv screws. A Pozidriv screwdriver No. 1 should be used in order to avoid damaging such screws.

7.3. Locating Subunits and Components

Locations of circuit boards in the equipment appear from the photographs on page 8-45. Locations of components on each circuit board appear on the component location drawings against the respective circuit diagrams.

7.4. Locating Faults

Fault finding, as described in section 7.5. below, is aided by test points provided for the purpose of permitting rapid localization of faulty circuit boards on the basis of DC measurements. Since not all types of faults can be traced by means of DC measurements, supplementary AC measurements with an oscilloscope may be required; see section 7.6. To facilitate fault finding on each individual circuit board, typical voltages are listed on the circuit diagrams.

7.5. Test Points

Several circuit boards contain one or more test points. They are small pin-type terminals, colour coded following the standard colour code in addition to being numbered. In the circuit diagrams, test points are marked TP 1, TP 2 etc., and typical voltages at the test points are listed there.

The terminals of the circuit boards may to a great extent also be regarded as test points. Typical voltages are therefore also listed against relevant terminals on the circuit diagrams.

If a voltage measured at a test point differs markedly from the listed value it is a fairly certain indication that the circuit board in question is faulty, assuming that the voltages applied to the circuit board are the correct ones. This should likewise be checked.

7.6. AC Voltages

AC voltages listed on the circuit diagrams are typical voltages. Voltages specified are based on measurement with an oscilloscope having an input impedance of 10 Mohms in parallel with 7 pF, a sensitivity of the order of 50mV/div. and a frequency range of not less than DC-50 MHz.

7.7. DC Voltages

DC voltages listed on the circuit diagrams are based on measurement with a 25 kohm/volt multimeter. If a stated voltage is dependent on the setting of a control, this is also stated on the circuit diagrams.
Typical logic levels (LOW/HIGH) are indicated in brackets.

7.8. Typical Sensitivity Levels

Input voltages to be applied at the input to 203 2nd mixer and the input to 205 IF amplifier, detector and AGC to obtain an AGC voltage of 2.3 V DC measured at terminal 205-17:

Receiver control settings:

MODE switch on A3J. A3A-AGC ON
SENSITIVITY turned fully clockwise
Frequency higher than 10 KHZ

Input to	Generator output impedance	Generator Frequency	Generator Modulation	Typical input level
203-8	50 ohm	37999 kHz	0	10 dB/luV
205-5	1 k ohm	1.399 kHz or 1.401 kHz	0	30 dB/luV

7.9. Adjustments

The following sections describe alignment procedures for printed circuit boards that contain adjustable components. Bear in mind that no adjustment should be carried out unless there is a clear indication that it is really necessary. Moreover, adjustments should be carried out only by a qualified technician with the necessary equipment at his disposal.

When a unit or printed circuit board is replaced, adjustments are in some cases necessary. These cases are listed in the table below:

Replacement of unit board:	Adjustment required of:	Procedure given in section:
209	209-R13 209-R14	7.15.3. 7.15.4.
210	210-R5	7.17.2.

7.10. Realignment of Input Filters 216

Measuring Equipment:

Standard signal generator covering the range 0.1-30 MHz and having an output impedance of 50 ohm. Accuracy better than 10 kHz. RF millivoltmeter having a sensitivity of 10 mV f.s.d. Input impedance better than 10 K ohm in parallel with 6 pF.

Connect signal generator to antenna input socket and set it to alignment frequency indicated in table below. Output voltage 100 mV.

7.10.1. Duplex Band

Receiver settings:

Band switch to the desired band.

1) Connect RF millivoltmeter probe to the input terminals 216-3 and 216-4.

2) Detune second and third tuned circuits of filter to be aligned by turning core anti-clockwise.

3) Adjust first tuned circuit for maximum voltage as indicated by RF millivoltmeter. Adjust second circuit for minimum reading and third tuned circuit for maximum.

7.10.2. Preselector Bands. MF

Bandswitch to the desired band:
0.060-0.180. 0.180-0.530. 0.530-1,6 MHz.

1) Connect RF millivoltmeter probe to test point 1.

2) Turn the preselector fully clockwise.

3) Adjust the signal generator.

4) Tune the coil to maximum.

7.10.3. Fixed Tuned Bands

Bandswitch to 500 KHz.

1) Connect RF millivoltmeter probe to test point 1.

2) Adjust the signal generator.

3) Adjust C3 to maximum.

7.10.4. Realignment of the Bands 1.6-4 MHz and 2182 KHz

Bandswitch to 2182 kHz

1) Adjust signal generator

2) Connect RF millivoltmeter probe to the input terminals 216-3 and 216-4.

3) Detune the second tuned circuit in the band 1.6-4 MHz by turning core anti-clockwise (T14).

4) Adjust first tuned circuit (T8) for maximum.

5) Adjust second circuit for minimum.

6) Bandswitch to 1.6-4 MHz.

7) Turn preselector fully clockwise.

8) Adjust signal generator (5000 kHz).

9) Adjust C 49 for maximum.

10) Adjust C 76 for minimum.

11) Bandswitch on 2182 kHz.

12) Adjust signal generator (2182 kHz).

13) Adjust C2 for maximum.

14) Adjust C1 for minimum.

7.10.5. Preselector Bands HF

Bandswitch to the desired band

4-12. 12-30 MHz.

1) Turn preselector fully anti-clockwise.

2) Connect RF millivoltmeter probe to the input terminals 216-3 and 216-4.

3) Detune second turned circuit of filter to be aligned by turning core anticlockwise.

4) Adjust signal generator.

5) Adjust first tuned circuit for maximum (T9 or T10).

6) Adjust second tuned circuit for minimum (T15 or T16).

7) Turn preselector fully clockwise.

8) Adjust signal generator.

9) Adjust C50 or C51 for max.

10) Adjust C 77 or C 78 for min.

7.10.6. Realignment of 1st mixer on circuit board 216

1) Connect signal generator to antenna input socket and adjust it to the frequency 37.999 kHz. Output voltage 10 mV.

2) Set bandswitch to the band 12-30 MHz.

3) Select the mode A3J. A3A.

4) Switch off the AGC.

5) Key-in the frequency 28.000.0 kHz.

6) Adjust 216-R25 for minimum whistling in the LF output.

7) Adjust the signal generator to 28.001.0 kHz. Output voltage 1 mV.

8) Adjust 216-T25 for maximum LF output.

Band	Alignment Frequencies	
4	4400 kHz	
6	6550 kHz	
8	8778 kHz	
12	13226 kHz	
16	17533 kHz	
22	23000 kHz	
25	26000 kHz	
0.06-0.18	175 kHz	
0.18-0.53	530 kHz	
0.53-1.6	1750 kHz	
500	500 kHz	
2182	2182 kHz	
	(Capacity)	(coil)
4-12	11.9 MHz	4 MHz
12-30	29	12 MHz

7.11 S 203 Realignment of 2nd Mixer and Clarifier Oscillator

Measuring equipment:

Standard signal generator covering 1400 kHz. Output impedance 50 ohm.
Frequency counter having an accuracy better than 10^{-6}.
AF output meter.

1) Connect signal generator to antenna input and tune it to the frequency for which the receiver is set. Output level approx. 0.1 mV.

2) Switch AGC off and adjust SENSITIVITY to a convenient output level.

7.11.1. Realignment of 1.4 MHz Mixer, 38 MHz Filter and 36.6 MHz Filter.

1) Adjust 203-T5, T3, T1 and T2 one by one for maximum AF output.

7.11.2. Realignment of the Clarifier Oscillator

1) Disconnect the wire to terminal 203-3.

2) Connect the counter to the test point TP 2.

3) Adjust the potentiometer R8 to the frequency 3000.000 Hz.

4) Replace the wire to terminal 203-3.

7.11.3. Realignment of Balancing Potentiometer R 36

1) Disconnect the coaxial cable to the terminal 203-8.

2) Connect the signal generator to the terminal 203-8.

3) Adjust the signal generator to the frequency 1399 kHz. Output level approx. 1 mV.

4) Select the mode A3J.A3A - AGC-OFF on the receiver.

5) Adjust the potentiometer R 36 for min. AF output.

7.12. 205 Realignment of IF amplifier Detector and AGC

Measuring equipment:

Standard Signal generator covering 2182 kHz.

7.12.1. Realignment of 1.4 MHz IF Filter and 2.8 MHz AGC Filter

1) Connect signal generator to antenna input and tune it to 2182 kHz. Signal level approx. 20 dB/1uV.

2) Set the BANDSWITCH to 2182.

3) Adjust cores in 205L1 and 205T1 for maximum AF output.

4) Increase signal generator level to approx. 40 dB/1uV and adjust 205 L2 for minimum AF output.

7.13. M 220 , S 220 Realignment of AF Amplifier.

Measuring Equipment:

Frequency counter, accuracy better than 10^{-7}.
RF millivoltmeter having a sensitivity of 10 mV f.s.d.
Input impedance better than 10 k ohm in parallel with 6 pF.
Extension board 259 .

7.13.1. Realignment of 1.4 MHz Coils

1) Connect the RF voltmeter between 220-10a and common.

2) Adjust the coil 220 T2 for maximum output (typically 90 mV).

3) Connect the RF voltmeter between 220-12C and 220-12a.

4) Adjust the coil 220T5 for maximum output (typically 350 mV unloaded).

7.13.2. Realignment of 33.6 MHz Filter

1) Connect the RF-voltmeter between 220-28c and 220-30c.

2) Adjust the coils 220 T3 and 220 T4 for maximum output (typically 53 MV).

7.14. M 220 , S 220 Frequency Adjustment of the TCXO

1) Connect the counter between 220-28c and 220-30c (11.2 MHz multiplied by 3).

2) At approx. 25°C the frequency must be within ± 2 Hz of the nominal frequency 11,2 MHz.

If the frequency is not whithin these limits, the value of the resistor R2 must be changed, generally with a lower value. A resistor can therefore be placed in parallel with R2.

7.15 209 Realignment of VCO_1 and VCO_2

Measuring equipment:

Frequency Counter having an accuracy better than 10^{-3} and a sensitivity of at least 0.5 V.

Extension Board 259

7.15.1. Realignment of VCO1

1) Connect a shorting lead between terminal 209-32c and common.

2) Connect the frequency counter between 209-22c and common.

3) Adjust transformer 209T1 until the counter reads 23.0 MHz.

4) Remove the shorting lead referred to in (1).

7.15.2. Realignment of VCO_2

1) Connect shorting lead between terminal 209-2c and common.

2) Connect the frequency counter between 209-16c and common.

3) Select the (3.7-4.69) MHz VCO_2-band.

4) Adjust transformer 209T2 until the counter reads 5.0 MHz.

5) Select the (4.70-5.69) MHz VCO_2-band.

6) Adjust coil 209 L6 until the counter reads 6.1 MHz.

7) Select the (5.70-6.69) MHz VCO_2 band.

8) Adjust coil 209 L5 until the counter reads 7.1 MHz.

9) Remove the short circuit referred to in (1).

7.15.3. Realignment of Phase/Frequency Detector 1 error signal

1) Unsolder the yellow lead from terminal 205-1.

2) Select by means of the keyboard 1.0 kHz as the receiving frequency.

3) Select the SSB-mode.

4) Set the clarifier to "0".

5) Adjust 209 R13 for minimum tone level from the loudspeaker.

6) Re-solder the yellow lead to terminal 205-1.

7.15.4. Realignment of Phase/Frequency Detector 2 error signal

1) Unsolder the yellow lead from terminal 205-1.

2) Select by means of the keyboard 9.0 kHz as the receiving frequency.

3) Select the SSB-mode.

4) Set the CLARIFIER to "0".

5) Adjust 209R14 for minimum tone level from the loudspeaker.

6) Resolder the yellow lead to terminal 205-1.

7.16. 208 Realignment of LOOP TRANSLATOR

Measuring Equipment:

Signal Generator covering the range 100 kHz to 10 MHz.

Oscilloscope or RF Voltmeter having an input impedance greater than 10 kohm and a sensitivity of at least 10 mV/Div.

Extension board 259 .

7.16.1. Realignment of 1.5 MHz LP-Filter

1) Remove p.c.b. 209 and 210 from their sockets.

2) Connect the signal generator to pin 12 of 2081C4 through a 0.1 pF capacitor and common.

3) Connect the oscilloscope probe tip to the collector of 208 TR5 and the oscilloscope ground clip to common.

4) Adjust the signal generator to 20mV rms.

5) Sweep the signal generator from 60 kHz to 1.45 MHz; the voltage reading level on the oscilloscope must not change more than 1 dB. (Take care that the output level of the signal generator does not change during the sweep).

6) Readjust the signal generator until the signal level measured is decreased by 3 dB related to the maximum signal level found under 5). The frequency should then be between 1.5 MHz and 1.9 MHz.

7) Readjust the signal generator until the signal level measured is decreased by 20 dB related to the maximum signal found under 5). The frequency should then be between 1.8 MHz and 1.9 MHz.

7.16.2. Realignment of Transformer 208 T1

1) Insert the p.c.b. 207 into its socket.

2) Select by means of the Keyboard 29.900.0 MHz as the receiving frequency.

3) Connect the oscilloscope probe tip to pin 1 of 2081C4.

4) Adjust the transformer 208 T1 until the signal measured is approximately 2Vpp.

7.17. 210 Realignment of VCO_3

Measuring equipment:

Frequency Counter having an accuracy better than 10^{-3}, a sensitivity of at least 1 V and an upper frequency limit of at least 75 MHz.

Extension Board 259 -

7.17.1. Realignment of VCO_3

1) Connect a shorting lead between terminal 210-6c and common.

2) Connect the frequency counter between 210-16c and common.

3) Select VCO_{3z}

4) Adjust 210C24 until the counter reads 51.0 MHz.

5) Select VCO_{3y}

6) Adjust 210C26 until the counter reads 61.3 MHz.

7) Select VCO_{3x}

8) Adjust 210C28 until the counter reads 71.3 MHz.

9) Remove the shorting lead referred to in (1).

7.17.2. Realignment of Phase/Frequency Detector 3 Error Signal

1) Select by means of the Keyboard 100.0 kHz as the receiving frequency.

2) Select the SSB-mode.

3) Adjust the CLARIFIER until an audible tone is heard from the loudspeaker. Adjust 210 R5 for minimum tone level from the loudspeaker.

8. PART LIST AND CIRCUIT DIAGRAMS

8.1. Numbering

An identification number between 201 and 293 is assigned to each module. The designation of a component or terminal includes this number as prefix - example: 213 R3 (resister R3 on module 213), or 213-4 (terminal No. 4 on module 213).

8.2. Switches

Switches with stops are shown in the extreme anticlockwise position. The BAND-switch is shown in the 500 kHz position.

Switch wafer No. 1. is the wafer nearest to the front panel, and the front side of a wafer is the side facing the front panel.

8.3. Terminals

Locations of terminals appear from the component location drawings. On the circuit diagrams, each terminal is identified by a number, and in most cases by an explanatory text. In addition to this, the number of the module and terminal to which the lead is connected is indicated (example: 213 -4). Where interconnections consists of coaxial cables, only the number of the terminal is given to which the inner conductor of the cable is connected.

8.4. Voltages

Typical DC voltages are indicated on the circuit diagram next to the points to which they refer and are marked with a "V".

Typical logic levels are indicated in a bracket (LOW/HIGH) on the circuit diagrams next to the point to which they refer.

Typical AC voltages are likewise indicated on the circuit diagrams. They are marked with "Vpp" or "mVpp".

For measuring conditions see Chapter 7.

8.5. Test Points

Location of test points are shown on the component location drawings. Typical voltage at each test point is indicated on the circuit diagram.

8.6. Symbol Explanation

8.6.1. Logic circuits:

A small circle at an external input means that the specific input is active LOW, i.e. it produces the desired function, in conjunction with other inputs if its voltage is the lower of the two logic levels in the system, otherwise the specific input is HIGH.

a small circle at a clock input means that the output indicates that the outputs change on the HIGH to LOW clock transition.

A small circle at an output indicates that when the function designated is true, the output is LOW.

Inputs and outputs are labelled with mnemonic letters as described in the table 8.6.1.

8.6.2. Logic Functions:

Logic functions are labelled with mnemonic letters in a bracket. An active LOW function is given a bar over the label.

More logic functions may be connected by means of the principles of Boolean Algebra.

8-6-3- Arrows:

A black arrow on a line indicates in which direction an AC-signal flows.

A white arrow on a line indicates in which direction the information of a DC signal flows. An exception from this rule are the supply lines and their connections, which are always indicated by a supply voltage level or its associated label.

Positive supply line: Example

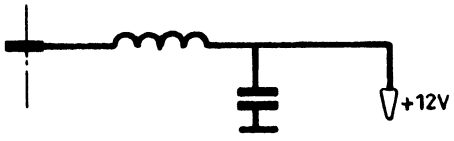

Negative supply line: Example

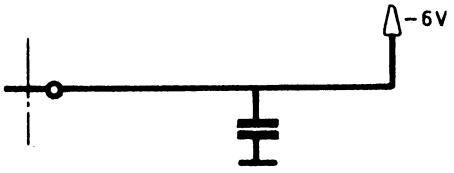

Connections to supply line: Example

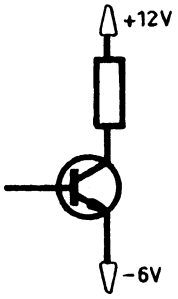

Label	Short for	Meaning
Ix	Input	Inputs to combinatorial circuits
J, K		Inputs to JK flip flops
Dx	Data	Inputs to D flip flops and latches
S, R	Set, Reset	Inputs to JK and D flip flops, latches, registers, and counters; R resets output to LOW; S sets output to HIGH
Px		Inputs registers and counters
Ax	Addresses	Inputs used for selection of an input, output, data route, or memory location.
E	enable	
PE	Parallel Enable	Control input used to synchronously load information in parallel into a circuit
MR	Master Reset	Input which resets asynchronously all outputs to LOW, overriding all other inputs.
CL	Clear	Input which resets outputs to LOW, but does not override all other inputs
CP	Clock Pulse	
CE, CEP, CET	Count Enable	Control inputs to counters
Ox	Output	Outputs of combinatorial circuits
Qx		Outputs of sequential circuits
TC	Terminal Count	(Output of a counter indicating 1111 for up binary counters, 101 for up decimal counters,or 0000 for down counters).

Table 8.6.1.

Abbreviations

A	= ampere, amperes
C	= capacitor
Car.	= carbon
Cer.	= ceramic
D	= diode
F	= farad
FS	= fuse
H	= henry
IC	= integrated circuit
k	= kilo or 10^3
L	= inductor
LS	= loudspeaker
lin.	= linear
log.	= logarithmic
m	= milli or 10^{-3}
M	= mega or 10^6
ME	= instrument
MF	= metal film
Mi	= mica
MP	= metallized paper
u	= micro or 10^{-6}
n	= nano or 10^{-9}
NPO	= temp. coefficient 0
N150	= temp. coefficient - 150
NTC	= neg. temp coefficient
P	= pico or 10^{-12}
PL	= connector (plug)
Polyes.	= polyester
Polyst.	= polystyrene
PTC	= pos. temp. coefficient
R	= resistor
RL	= relay
S	= switch
SK	= connector (socket)
SL	= lamp
T	= transformer
Tan	= tantalum electrolytic capacitor
TR	= transistor
V	= working voltage DC or volts
Vl...	= valve
Vac.	= working voltage AC
Var.	= variable
Vpp	= peak to peak voltage
Varicap	= variable capacitance diode
ww	= wire wound
W	= watt, watts
W.alum.	= wet aluminium electrolytic
X	= crystal, crystal osc. or crystal filter

PARTS LIST

FOR

M 215

215C 1	100 pF	1%	500V	Polyst.	615 210 00
C 2-3	UHF π Filter			Cer.	779 000 02
C 4	470 uF		10V	W.alum.	651 847 00
D 1-2	1S920				830 192 00
215PL1		One Way			751 000 01
215R 1	4.7 kohms	Lin			355 241 41
R 2	10 kohms	Lin			355 222 21
R 3	10 kohms	Log			355 219 81
R 4	100 kohms	5%	1/3W	Car.	501 510 00
215S 1	Band				375 200 86
S 2	Bandwidth				375 202 03
S 3	Mode				375 201 84
S 4					762 000 11
S 5					762 000 10
S 6					345 228 51
S 7	only in S1				762 000 19
215SK1					750 000 11
215L 1	22 uH	10%	RF Choke		740 122 01
L 2	100 uH	10%	RF Choke		740 210 00

995 243 24

995 242 63

PARTS LIST

FOR

201

201C 1-4	0.1 uF	10%	250V	Polyes.	624 510 01
C 5-11	10 nF	-20%+80%	32V	Cer.	602 410 00
C12-13	0.1 uF	10%	250V	Polyes.	624 510 01
C14-16	10 nF	-20%+80%	32V	Cer.	602 410 00
201SK 1-4		32 Way			751 000 21
SK 5-6		64 Way			751 000 23

PARTS LIST

FOR

213

213C 1	0.68 uF	10%	100V	Polyes.	623 568 00
C 2	0.47 uF	10%	250V	Polyes.	624 547 00
C 3	0.1 uF	10%	250V	Polyes.	624 510 00
C 4	1000 uF		25V	W.alum.	652 910 00
C 5	2200 uF		40V	W.alum.	652 922 00
C 6	39 pF	5%	400V	Cer.	605 139 00
C 7	0.1 uF	10%	250V	Polyes.	624 510 00
C 8	0.68 uF	10%	100V	Polyes.	623 568 00
C 9-10	0.01 uF	10%	250V	Polyes.	624 410 00
C11-12	39 pF	5%	400V	Cer.	605 139 00
C13	18 pF	5%	400V	Cer.	605 118 02
C14	27 pF	5%	400V	Cer.	605 127 02
213IC1-2	7812				850 781 20
IC3	7805				850 780 50
213L1-4	25 uH		RF Choke		740 125 00
L5	100 uH	10%	RF Choke		740 210 00
L6-8	25 uH		RF Choke		740 125 00
L9-10	22 uH	10%	RF Choke		740 122 00
L11			Coil		105 216 21
L12			Coil		105 216 11
L13			Coil		105 216 21
213PL1	12 Way				751 000 27
213R1	2.2 kohms	5%	1/3W	Car.	501 322 00
R2	33 kohms	5%	1/3W	Car.	501 433 00
213SK1-3					750 000 10

PARTS LIST

FOR

202 216

202/216C 1-3	4.5-26 pF	Var.			683 126 00
C 4	220 pF	1%	500V	Polyst.	615 222 00
C 5	2x518 pF	Var.			686 251 81
C 6	220 pF	1%	500V	Polyst.	615 222 00
C 7	10 nF	-20+80%	32V	Cer.	602 410 00
C 8	0.68 uF	10%	100V	Polyes.	623 568 00
C 9	0.1 uF	10%	250V	Polyes.	624 510 00
C10	1 uF	10%	250V	Polyes.	624 610 00
C11	0.1 uF	10%	250V	Polyes.	624 510 00
C12	0.1 uF	10%	100V	Polyes.	623 510 00
C13-19	0.1 uF	10%	250V	Polyes.	624 510 00
C20	910 pF	1%	500V	Polyst.	615 291 00
C21	422 pF	1%	125V	Polyst.	613 242 20
C22	130 pF	5%	400V	Cer.	605 213 00
C23	100 pF	5%	400V	Cer.	605 210 00
C24	91 pF	5%	400V	Cer.	605 191 00
C25	0.1 uF	10%	100V	Polyes.	623 510 00
C26	4.7 pF	±0.25 pF	400V	Cer.	605 047 01
C27	3.9 pF	±0.25 pF	400V	Cer.	605 039 00
C28	5.6 pF	±0.25 pF	400V	Cer.	605 056 00
C29	0.1 uF	10%	100V	Polyes.	623 510 00
C30	910 pF	1%	500V	Polyst.	615 291 00
C31	0.1 uF	10%	100V	Polyes.	623 510 00
C32	422 pF	1%	125V	Polyst.	613 242 00
C33	180 pF	5%	400V	Cer.	605 218 01
C34	180 pF	5%	400V	Cer.	605 218 00
C35	3.9 pF	±0.25 pF	400V	Cer.	605 039 00
C36	3.3 pF	±0.25 pF	400V	Cer.	605 033 00
C37	6.8 pF	±0.25 pF	400V	Cer.	605 068 00
C38	68 pF	5%	400V	Cer.	605 168 00
C39	51 pF	5%	400V	Cer.	605 151 00
C40	39 pF	5%	400V	Cer.	605 139 00
C41	3.3 pF	±0.25 pF	400V	Cer.	605 033 00
C42	1.5 pF	±0.25 pF	400V	Cer.	605 015 00
C43-44	1.8 pF	±0.25 pF	400V	Cer.	605 018 00
C45	15 pF	5%	400V	Cer.	605 115 00
C46	100 pF	5%	400V	Cer.	605 210 00
C47	3 3 nF	1%	125V	Polyst.	613 333 00
C48	0.1 uF	10%	250V	Polyes.	624 510 00
C49-51	4.5-26 pF	Var.			683 126 00
C52	130 pF	5%	400V	Cer	605 213 00
C53	100 pF	5%	400V	Cer.	605 210 00

PARTS LIST

FOR

202 216

202/216	C54	91 pF	5%	400V	Cer.	605 191 00
	C55	1.8 pF	±0.25 pF	400V	Cer.	605 018 00
	C56	47 nF	±10%	250V	Polyes.	624 447 00
	C57	1.8 pF	±0.25 pF	400V	Cer.	605 018 00
	C58	22 nF	±10%	250V	Polyes.	624 422 00
	C59	4.7 pF	±0.25 pF	400V	Cer.	605 047 01
	C60	180 pF	±5%	400V	Cer.	605 218 00
	C61	4.7 pF	±0.25 pF	400V	Cer.	605 047 01
	C62	3.9 pF	±0.25 pF	400V	Cer.	605 039 00
	C63	5.6 pF	±0.25	400V	Cer.	605 056 00
	C64	68 pF	5%	400V	Cer.	605 168 00
	C65	51 pF	5%	400V	Cer.	605 151 00
	C66	39 pF	5%	400V	Cer.	605 139 00
	C67	3.3 pF	±0.25 pF	400V	Cer.	605 033 00
	C68	3.9 pF	±0.25 pF	400V	Cer.	605 039 00
	C69	3.3 pF	±0.25 pF	400V	Cer.	605 033 00
	C70	6.8 pF	±0.25 pF	400V	Cer.	605 068 00
	C71	2.7 pF	±0.25 pF	400V	Cer.	605 027 00
	C72-73	1.8 pF	±0.25 pF	400V	Cer.	605 018 00
	C74	27 pF	±5%	400V	Cer.	605 127 00
	C75	15 pF	5%	400V	Cer.	605 115 00
	C76-78	4.5-26 pF	Var.			683 126 00
	C79	180 pF	5%	400V	Cer.	605 218 00
	C80	130 pF	5%	400V	cer.	605 213 00
	C81	100 pF	5%	400V	Cer.	605 210 00
	C82	91 pF	5%	400V	Cer.	605 191 00
	C83	68 pF	5%	400V	Cer.	605 168 00
	C84	47 pF	5%	400V	Cer.	605 147 00
	C85	33 pF	5%	400V	Cer.	605 133 00
	C86	3.3 nF	1%	125V	Polyst.	613 333 00
	C87	1 uf	10%	100V	Polyes.	623 610 00
	C88	0.1 uF	10%	250V	Polyes.	624 510 00
	C89-98	0.1 uF	10%	100V	Polyes.	623 510 00
	C99	10 nF	-20+80%	32V	Cer.	602 410 00
	C100	0.1 uF	10%	100V	Polyes.	623 510 00
	C101-102	15 pF	5%	400V	Cer.	605 115 00
	C103	1 uF	10%	100V	Polyes.	623 610 00
	C104-105	0.1 uF	10%	100V	Polyes.	623 510 00
	C106-108	10 nF	-20+80%	32V	Cer.	602 410 00
	C109	22 pF	±0.25 pF	400V	Cer.	605 122 02
	C110	0.1 uF	±10%	100V	Polyes.	623 510 00
	C111-112	10 nF	-20+80%	32V	Cer.	602 410 00

PARTS LIST

FOR

202 216

202/216	C113	0.1 uF	10%	250V	Polyes.	624 510 00
	C114	0.1 uF	10%	100V	Polyes.	623 510 00
	C115	10 nF	-20/+80%	32V	Cer.	602 410 00
	C116-118	0.1 uF	10%	100V	Polyes.	623 510 00
	C119	0.1 uF	10%	250V	Polyes.	624 510 00
	C120	10 nF	10%	250V	Polyes.	624 410 00
	C121	18 pF	5%	400V	Cer.	605 118 00
202/216	D 1- 4	388A				830 038 80
	D 5-42	1S920				830 192 00
202/216	L 1- 2	1 mH	10%	RF Choke		740 310 01
	L 3- 4	100 uH	10%	RF Choke		740 210 00
	L 6			Coil		105 018 32
	L 7			Coil		105 018 42
	L 8			Coil		105 018 52
	L 9	680 uH	10%	RF-Choke		740 268 00
	L10			Coil		105 018 62
	L11-12			Coil		105 018 72
	L13			Coil		105 018 22
	L14-15	22 uH	10%	RF Choke		740 122 00
	L16-17	0.68 uH	10%	RF Choke		740 006 80
	L18	22 uH	10%	RF Choke		740 122 00
	L19	1 mH	10%	RF Choke		740 310 01
202/216	R1	100 kohm	5%	1/3W	Car.	501 510 00
	R2	100 ohms	5%	1/3W	Car.	501 210 00
	R 3- 9	1 kohm	5%	1/3W	Car.	501 310 00
	R10	220 kohms	5%	1/3W	Car.	501 522 00
	R11	6.8 kohms	5%	1/3W	Car.	501 368 00
	R12-14	1 kohm	5%	1/3W	Car.	501 310 00
	R15-16	10 kohms	5%	1/3W	Car.	501 410 00
	R17-18	18 kohms	5%	1/3W	Car.	501 418 00
	R19-20	330 ohms	5%	1/3W	Car.	501 233 00
	R21-22	33 kohms	5%	1/3W	Car.	501 433 00
	R23	8.2 kohms	5%	1/3W	Car.	501 382 00
	R24	39 ohms	5%	1/3W	Car.	501 139 00
	R25	100 ohms	Var.			582 210 00
	R26	39 ohms	5%	1/3W	Car.	501 139 00
	R27-28	56 ohms	5%	1/3W	Car.	501 156 00
202/216	S 1					375 200 45
	S 2- 3					375 200 56
	S 4					375 200 76
	S 5					375 200 65

PARTS LIST

FOR

202 216

202/216SL1- 8	A9A-C			821 000 05
202/216T 1		Transformator		105 017 71
T 2		Transformator		105 017 81
T 3		Transformator		105 017 91
T 4		Transformator		105 017 62
T 5		Transformator		105 018 01
T 6- 7		Transformator		105 018 11
T 8		Transformator		105 216 61
T 9		Transformator		105 216 41
T10		Transformator		105 216 53
T11		Transformator		105 218 02
T12		Transformator		105 218 12
T13		Transformator		105 218 22
T14		Transformator		105 216 91
T15		Transformator		105 217 01
T16		Transformator		105 217 11
T17		Transformator		105 217 21
T18		Transformator		105 217 31
T19		Transformator		105 217 41
T20		Transformator		105 217 51
T21		Transformator		105 217 61
T22-23		Transformator		105 217 72
T24		Transformator		105 217 91
T25		Transformator		105 215 12
T26		Transformator		105 217 91
202/216TR1- 4	J310			840 031 01
202X 1	Crystal filter	38 MHz	-2.7/+2.7 MHz	285 201 41
216X 1	Crystal filter	38 MHz	-4/+4 MHz	385 201 31

PARTS LIST

FOR

221

221C2	68pF	5%	25V	Cer.	602 168 02
C3	120pF	10%	25V	Cer.	602 212 01
C4	150pF	10%	25V	Cer.	602 215 01
C5	120pF	10%	25V	Cer.	602 212 01

221L1, L2, L3	375 239 61

PARTS LIST

FOR

S 203

203C 1	0.1 uF	10%	250V	Polyes.	624 510 00
C 2	47 nF	10%	250V	Polyes.	624 447 00
C 3	0.1 uF	10%	250V	Polyes.	624 510 00
C 4	560 pF	1%	500V	Polyst.	615 256 00
C 5	510 pF	1%	500V	Polyst.	615 251 00
C 6- 7	2.2 nF	1%	250V	Polyst.	614 322 00
C 8	22 uF		16V	Polyst.	615 722 00
C 9-10	47 nF	-20/+80%	16V	Cer.	601 447 00
C11	56 pF	5%	400V	Cer.	605 156 02
C12	22 pF	±0.25 pF	400V	Cer.	605 122 02
C13	1 pF				————
C14	56 pF	5%	400V	Cer.	605 156 02
C15-16	47 nF	-20/+80%	16V	Cer.	601 447 00
C17	0.1 uF	10%	250V	Polyes.	624 510 00
C18	47 nF	-20/+80%	16V	Cer.	601 547 00
C19	0.1 uF	10%	250V	Polyes.	624 510 00
C20	4.7 pF	±0.25 pF	400V	Cer.	605 047 01
C21	10 nF	-20/+80%	32V	Cer.	602 410 00
C22	0.1 uF	10%	250V	Polyes.	624 510 00
C23	110 pF	1%	500V	Polyst.	615 211 00
C24	10 nF	-20/+80%	32V	Cer.	602 410 00
C25-26	0.1 uF	10%	250V	Polyes.	624 510 00
C27-29	10 nF	-20/+80%	32V	Cer.	602 410 00
C30	0.1 uF	10%	250V	Polyes.	624 510 00
C31	390 pF	1%	500V	Polyst.	615 239 00
C32	0.1 uF	10%	250V	Polyes.	624 510 00
C33	10 nF	-20/+80%	32V	Cer.	602 410 00
C34	0.1 uF	10%	250V	Polyes.	624 510 00
C35-36	10 nF	-20/+80%	30V	Cer.	602 410 00
C37	22 pF	10%	400V	Cer.	605 122 02
203D 1- 4	BB109 G				833 010 90
D 5	BA379				833 037 90
203IC1	1496CN				850 149 60
203L 1- 3	100 uH	10%	RF Choke		740 210 00

PARTS LIST

FOR

203R 1	18 kohms	5%	1/3W	Car.	501 418 00
R 2	3.3 kohms	5%	1/3W	Car.	501 333 00
R 3	1.2 kohms	5%	1/3W	Car.	501 312 00
R 4	1.8 kohms	5%	1/3W	Car.	501 318 00
R 5	22 kohms	5%	1/3W	Car.	501 422 00
R 6	12 kohms	5%	1/3W	Car.	501 412 00
R 7	150 kohms	5%	1/3W	Car.	501 515 00
R 8	47 kohms	Var.			582 447 00
R 9	56 ohms	5%	1/3W	Car.	501 156 00
R10	100 ohms	5%	1/3W	Car.	501 210 00
R11	470 kohms	5%	1/3W	Car.	501 515 00
R12	470 kohms	5%	1/3W	Car.	501 547 00
R13	1.2 kohms	5%	1/3W	Car.	501 312 00
R14	470 kohms	5%	1/3W	Car.	501 547 00
R15	560 ohms	5%	1/3W	Car.	501 256 00
R16	27 kohms	5%	1/3W	Car.	501 427 00
R17	22 kohms	5%	1/3W	Car.	501 422 00
R18	12 kohms	5%	1/3W	Car.	501 412 00
R19	82 kohms	5%	1/3W	Car.	501 482 00
R20	1.5 kohms	5%	1/3W	Car.	501 315 00
R21	2.7 kohms	5%	1/3W	Car.	501 327 00
R22	Not used				
R23	680 ohms	5%	1/3W	Car.	501 268 00
R24	10 kohms	5%	1/3W	Car.	501 410 00
R25	1.5 kohms	5%	1/3W	Car.	501 315 00
R26	2.2 kohms	5%	1/3W	Car.	501 322 00
R27	10 kohms	5%	1/3W	Car.	501 410 00
R28	27 kohms	5%	1/3W	Car.	501 427 00
R29	33 ohms	5%	1/3W	Car.	501 133 00
R30	330 ohms	5%	1/3W	Car.	501 233 00
R31	100 ohms	5%	1/3W	Car.	501 210 00
R32	47 ohms	5%	1/3W	Car.	501 147 00
R33	1 kohms	5%	1/3W	Car.	501 310 00
R34	10 kohms	5%	1/3W	Car.	501 410 00
R35	470 ohms	5%	1/3W	Car.	501 247 00
R36	1 kohm	Var.			582 310 00
R37	680 ohms	5%	1/3W	Car.	501 268 00
R38	470 ohms	5%	1/3W	Car.	501 247 00
R39	56 ohms	5%	1/3W	Car.	501 156 00
R40	10 kohms	5%	1/3W	Car.	501 410 00
R41	2.2 kohms	5%	1/3W	Car.	501 322 00

PARTS LIST

FOR

203T 1		Transformator	105 215 21
T 2		Transformator	105 215 31
T 3		Transformator	105 215 41
T 4		Transformator	105 216 71
T 5		Transformator	105 106 62
203TR1- 3	BC547B		840 054 70
TR4	BSX20		840 002 00
TR5	TIS88A		843 008 80
TR6	BC547B		840 054 70
TR7	TIS88A		843 008 80
203X 1		2.999 750 MHz	385 202 23

PARTS LIST

FOR

M 217

217C 1	10 nF	10%	250V	Polyes.	624 410 00
C 2	0.1 uF	10%	250V	Polyes.	624 510 00
C 3	1 nF	1%	500V	Polyst.	615 310 01
C 4- 8	0.1 uF	10%	250V	Polyes.	624 510 00
C 9	6.8 nF	1%	125V	Polyst.	613 368 00
C10	0.1 uF	10%	250V	Polyes.	624 510 00
C11	1 nF	1%	500V	Polyst.	615 310 01
C12	10 nF	10%	250V	Polyes.	624 410 00
217D 1-10	1S920				830 192 00
217L 1- 2			Coil		105 215 81
217R 1	6.8 kohms	5%	1/3W	Car.	501 368 00
R 2- 6	100 ohms	5%	1/3W	Car.	501 210 00
R 7-11	6.8 kohms	5%	1/3W	Car.	501 368 00
R12-16	3.3 kohms	5%	1/3W	Car.	501 333 00
R17-21	10 kohms	5%	1/3W	Car.	501 410 00
R22	3.3 kohms	5%	1/3W	Car.	501 333 00
R23	100 ohms	5%	1/3W	Car.	501 210 00
217X 1	Filter LSB	1.4 MHz			385 112 02
X 2	Filter Telex				385 201 71
X 3	Filter Narrow				385 201 01
X 4	Filter Verynarrow				385 200 91

995 242 81

PARTS LIST

FOR

205

205C 1	4.7 nF	-20/+80%	32V	Cer.	602 347 00
C 2	22 uF		16V	Tan	651 722 00
C 3	0.1 uF	10%	250V	Polyes.	624 510 00
C 4	2.2 pF	±0.25 pF	400V	Cer.	605 022 00
C 5	0.1 uF	10%	250V	Polyes.	624 510 00
C 6	4.7 nF	-20/+80%	32V	Cer.	602 347 00
C 7	0.1 uF	10%	250V	Polyes.	624 510 00
C 8	100 uF		25V	W.alum.	652 810 00
C 9-12	0.1 uF	10%	250V	Polyes.	624 510 00
C13	1 nF	1%	500V	Polyst.	615 310 00
C14	0.1 uF	10%	250V	Polyes.	624 510 00
C15	4.7 nF	-20/+80%	32V	Cer.	602 347 00
C16	0.1 uF	10%	250V	Polyes.	624 510 00
C17	10 pF	5%	400V	Cer.	605 110 00
C18	1.2 nF	1%	500V	Polyst.	615 312 00
C19-20	22 nF	10%	250V	Polyes.	624 510 00
C21	120 pF	5%	400V	Cer.	605 212 00
C22	470 pF	1%	500V	Polyst.	615 247 00
C23	4.7 nF	-20/+80%	32V	Cer.	602 347 00
C24-28	0.1 uF	10%	250V	Polyes.	624 510 00
C29	3.9 nF	1%	250V	Polyst.	614 339 00
C30	4.7 nF	-20/+80%	32V	Cer.	602 347 00
C31-32	0.1 uF	10%	250V	Polyes.	624 510 00
C33	0.47 uF	10%	250V	Polyes.	624 547 00
C34-35	0.1 uF	10%	250V	Polyes.	624 510 00
C36	10 nF	-20/+80%	32V	Cer.	602 410 00
205D 1- 9	1S920				830 192 00
D10	AAZ17				830 001 70
D11-12	1S920				830 192 00
205IC1	TBA120				850 012 00
205L 1			Coil		105 106 92
L 2			Coil		105 107 22
L 3- 4	100 uH	10%	RF-Choke		740 210 00
205R 1	10 kohms	5%	1/3W	Car.	501 410 00
R 2	100 ohms	5%	1/3W	Car.	501 210 00
R 3	10 kohms	5%	1/3W	Car.	501 410 00
R 4	680 ohms	5%	1/3W	Car.	501 268 00
R 5	1 kohm	5%	1/3W	Car.	501 310 00
R 6	10 kohms	5%	1/3W	Car.	501 410 00

PARTS LIST

FOR

205

205R 7	27 ohms	5%	1/3W	Car.	501 127 00
R 8	100 ohms	5%	1/3W	Car.	501 210 00
R 9	1 kohm	5%	1/3W	Car.	501 310 00
R10	10 kohms	5%	1/3W	Car.	501 410 00
R11-12	1 kohm	5%	1/3W	Car.	501 310 00
R13	1.2 kohms	5%	1/3W	Car.	501 312 00
R14	150 kohms	5%	1/3W	Car.	501 515 00
R15	10 kohms	5%	1/3W	Car.	501 410 00
R16	470 ohms	5%	1/3W	Car.	501 247 00
R17-18	330 ohms	5%	1/3W	Car.	501 233 00
R19	1 kohm	5%	1/3W	Car.	501 310 00
R20	4.7 kohms	5%	1/3W	Car.	501 347 00
R21-22	100 kohms	5%	1/3W	Car.	501 510 00
R23	680 ohms	5%	1/3W	Car.	501 268 00
R24	33 ohms	5%	1/3W	Car.	501 133 00
R25	3.3 kohms	5%	1/3W	Car.	501 333 00
R26	1 kohm	5%	1/3W	Car.	501 310 00
R27	68 kohms	5%	1/3W	Car.	501 468 00
R28	27 kohms	5%	1/3W	Car.	501 427 00
R29	330 ohms	5%	1/3W	Car.	501 233 00
R30	6.8 kohms	5%	1/3W	Car.	501 368 00
R31	4.7 kohms	5%	1/3W	Car.	501 347 00
R32	1.2 kohms	5%	1/3W	Car.	501 312 00
R33	1 kohm	5%	1/3W	Car.	501 310 00
R34	3.3 kohms	5%	1/3W	Car.	501 333 00
R35	100 ohms	5%	1/3W	Car.	501 210 00
R36	1.2 kohms	5%	1/2W	Car.	502 312 00

205T 1	Transformer	105 107 02

205TR1- 2	BF240	840 024 00
TR3	BC547B	840 054 70
TR4	BF240	840 024 00
TR5	BC547B	840 054 70

PARTS LIST

FOR

M 220 S 220

220C 1	0.47uF	10%	100V	Polyes.	623 547 00
C 2	0.1 uF	10%	250V	Polyes.	624 510 00
C 3	0.1 uF	10%	100V	Polyes.	623 510 00
C 4	47 nF	-20+80%	16V	Cer.	601 447 00
C 5	22 uF		16V	Tan.	651 722 00
C 6-7	10 nF	-20+80%	32V	Cer.	602 410 00
C 8	0.1 uF	-20+80%	16V	Cer.	601 510 00
C 9	0.1 uF	10%	250V	Polyes.	624 510 00
C10	10 nF	10%	250V	Polyes.	624 410 00
C11	0.47 uF	10%	100V	Polyes.	623 547 00
C12	10 nF	10%	250V	Polyes	624 410 00
C13	10 nF	-20+80%	32V	Cer.	602 410 00
C14	470 uF		16V	W.alum.	651 847 00
C15	47 nF	-20+80%	16V	Cer.	601 447 00
C16	22 uF		16V	Tan.	651 722 00
C17	100 uF		25V	W.alum.	652 810 00
C18	110 pF	1%	500V	Polyst.	615 211 00
C19	22 uF		16V	Tan.	651 722 00
C20	220 pF	1%	500V	Polyst.	615 222 00
C21	10 nF	-20+80%	32V	Cer.	602 410 00
C22	0.1 uF	10%	100V	Polyes.	623 510 00
C23	47 pF	5%	400V	Cer.	605 147 00
C24	10 nF	10%	250V	Polyes.	624 410 00
C25	110 pF	1%	500V	Polyst.	615 211 00
C26	1.2 nF	1%	500V	Polyst.	615 312 00
C27	100 uF		25V	W.alum.	652 810 00
C28	4.7 nF	-20+80%	32V	Cer.	602 347 00
C29	47 nF	-20+80%	16V	Cer	601 447 00
C30	0.1 uF	10%	100V	Polyes.	623 510 00
C31	47 nF	-20+80%	16V	Cer.	601 447 00
C32	0.1 uF	-20+80%	16V	Cer.	601 510 00
C33	5.6 nF	1%	63V	Polyst.	612 356 00
C34	0.22 uF	10%	250V	Polyes.	624 522 01
C35	22 uF		16V	Tan.	651 722 00
C36	1.2 nF	1%	500V	Polyst.	615 312 00
C37	2.2 nF	1%	250V	Polyst.	614 322 00
C38	330 pF	1%	500V	Polyst.	615 233 00
C39	0.1 uF	-20+80%	16V	Cer.	601 510 00
C40	47 nF	-20+80%	16V	Cer.	601 447 00
C41	10 nF	10%	250V	Polyes.	624 410 00
C42	0.1 uF	10%	100V	Polyes.	623 510 00

PARTS LIST

FOR

M 220 S 220

220C43	100 uF		25V	W.alum.	652 810 00
C44	0.1 uF	10%	250V	Polyes.	624 510 00
C45	470 uF		16V	W.alum.	651 847 00
C46	47 nF	-20+80%	16V	Cer.	601 447 00
C47-49	0.1 uF	-20+80%	16V	Cer.	601 510 00
C50	0.1 uF	10%	250V	Polyes.	624 510 00
C51	47 pF	5%	400V	Cer.	605 147 00
C52	0.22uF	10%	250V	Polyes.	624 522 01
C53	3.3 pF	±0.25pF	400V	Cer.	605 033 00
C54	2.7 pF	±0.25pF	400V	Cer.	605 027 00
C55	47 pF	5%	400V	Cer.	605 147 00
C56	0.1 uF	10%	250V	Polyes.	624 510 00
C57	3.3 nF	1%	125V	Polyst.	613 333 00
C58-59	0.22uF	10%	250V	Polyes.	624 522 01
C60-61	0.22uF	10%	100V	Polyes.	623 522 00
C62-63	0.1 uF	10%	100V	Polyes.	623 510 00
220D 1	BB109				833 010 90
D 2-6	IS920				830 192 00
220IC1	1496				850 149 60
IC2	TBA810S				850 081 00
IC3	7493				850 749 31
220L 1-5	100 uH		RF-Choke		740 210 00
L 6-7			Coil		105 215 91
L 8-15	100 uH		RF-Choke		740 210 00
220PL1	32 Way				701 000 20
220R 1	820 ohms	5%	1/3W	Car.	501 282 00
R 2	4.7 kohms	5%	1/3W	Car.	501 347 00
R 4	47 kohms			Var.	582 447 01
R 5	180 kohms	5%	1/3W	Car.	501 518 00
R 6	1 kohms	5%	1/3W	Car.	501 310 00
R 7	100 kohms	5%	1/3W	Car.	501 510 00
R 8	33 kohms	5%	1/3W	Car.	501 433 00
R 9	1.8 kohms	5%	1/3W	Car.	501 318 00
R10	100 kohms	5%	1/3W	Car.	501 510 00
R11	4.7 kohms	5%	1/3W	Car.	501 347 00
R12	3.9 kohms	5%	1/3W	Car.	501 339 00
R13	15 kohms	5%	1/3W	Car.	501 415 00
R14	1.8 kohms	5%	1/3W	Car.	501 318 00
R15	150 ohms	5%	1/3W	Car.	501 215 00
R16	4.7 kohms	5%	1/3W	Car.	501 347 00

PARTS LIST

FOR

M 220 S 220

220R17	1.2 kohms	5%	1/3W	Car.	501 312 00
R18	22 kohms	5%	1/3W	Car.	501 422 00
R19	1 kohms	5%	1/3W	Car.	501 310 00
R20	220 ohms	5%	1/3W	Car.	501 222 00
R21	3.3 kohms	5%	1/3W	Car.	501 333 00
R22	470 ohms	5%	1/3W	Car.	501 247 00
R23	270 ohms	5%	1/3W	Car.	501 227 00
R24-25	680 ohms	5%	1/3W	Car.	501 268 00
R26	12 kohms	5%	1/3W	Car.	501 412 00
R27	18 kohms	5%	1/3W	Car.	501 418 00
R28	10 kohms	5%	1/3W	Car.	501 410 00
R29	27 kohms	5%	1/3W	Car.	501 427 00
R30	8.2 kohms	5%	1/3W	Car.	501 382 00
R31	1 kohms	5%	1/3W	Car.	501 310 00
R32	2.7 kohms	5%	1/3W	Car.	501 327 00
R33	2.2 kohms	5%	1/3W	Car.	501 322 00
R34	680 ohms	5%	1/3W	Car.	501 268 00
R35	56 ohms	5%	1/3W	Car.	501 156 00
R36	680 ohms	5%	1/3W	Car.	501 268 00
R37	10 kohms	5%	1/3W	Car.	501 410 00
R38	33 ohms	5%	1/2W	Car.	502 133 00
R39	8.2 kohms	5%	1/3W	Car.	501 382 00
R40	15 kohms	5%	1/3W	Car.	501 415 00
R41	820 ohms	5%	1/3W	Car.	501 282 00
R42	270 ohms	5%	1/3W	Car.	501 227 00
R43	100 kohms	5%	1/3W	Car.	501 510 00
R44-45	10 kohms	5%	1/3W	Car.	501 410 00
R46	12 kohms	5%	1/3W	Car.	501 412 00
R47	470 ohms	5%	1/3W	Car.	501 247 00
R48	820 ohms	5%	1/3W	Car.	501 282 00
R49	220 ohms	5%	1/3W	Car.	501 222 00
R50	10 kohms	5%	1/3W	Car.	501 410 00
R51	22 ohms	5%	1/3W	Car.	501 122 00
R52	47 ohms	5%	1/3W	Car.	501 147 00
R53	5.6 kohms	5%	1/3W	Car.	501 356 00
R54	39 kohms	5%	1/3W	Car.	501 439 00
R55	330 ohms	5%	1/3W	Car.	501 233 00
R56	120 ohms	5%	1/3W	Car.	501 212 00
R57-58	470 ohms	5%	1/3W	Car.	501 247 00
R59	390 ohms	5%	1/3W	Car.	501 239 00

PARTS LIST

FOR

M 220 S 220

220R60	220 ohms	5%	1/3W	Car.	501 222 00
R61	100 ohms	5%	1/3W	Car.	501 210 00
R62	2.7 kohms	5%	1/3W	Car.	501 327 00
R63	10 kohms	5%	1/3W	Car.	501 410 00
R64	680 ohms	5%	1/3W	Car.	501 268 00
R65	2.7 kohms	5%	1/3W	Car.	501 327 00
R66	680 ohms	5%	1/3W	Car.	501 268 00
R67	1 ohms	5%	2W	WW	523 010 00
R68	820 ohms	5%	1/3W	Car.	501 282 00
R69-70	3.3 kohms	5%	1/3W	Car.	501 333 00
R71	6.8 kohms	5%	1/3W	Car.	501 368 00
R72	1 kohms	5%	1/3W	Car.	501 310 00
R73-74	560 ohms	5%	1/3W	Car.	501 256 00
R75	4.7 kohms	5%	1/3W	Car.	501 347 00
R76	6.8 kohms	5%	1/3W	Car.	501 368 00
R77	56 ohms	5%	1/3W	Car.	501 156 00
R78	27 ohms	5%	1/3W	Car.	501 127 00

220T 1	Transformator	105 216 01
T 2	Transformator	105 218 31
T 3	Transformator	105 215 51
T 4	Transformator	105 215 61
T 5	Transformator	105 215 71

220TR 1	BC547B	840 054 70
TR 2	BF240	840 024 00
TR 3	BC557B	840 055 70
TR 4	BC547B	840 054 70
TR 5-6	BF240	840 024 00
TR 7	BSX20	840 002 00
TR 8	BC547B	840 054 70
TR 9-10	BSX20	840 002 00

220X 1	12.5965MHz	385 201 52
X 2	12.5950MHz	385 201 62
X 3	TCXO 11,2 MHz Spec.B281	811 000 03

PARTS LIST

FOR

M 220 S 220

220R17	1.2 kohms	5%	1/3W	Car.	501 312 00
R18	22 kohms	5%	1/3W	Car.	501 422 00
R19	1 kohms	5%	1/3W	Car.	501 310 00
R20	220 ohms	5%	1/3W	Car.	501 222 00
R21	3.3 kohms	5%	1/3W	Car.	501 333 00
R22	470 ohms	5%	1/3W	Car.	501 247 00
R23	270 ohms	5%	1/3W	Car.	501 227 00
R24-25	680 ohms	5%	1/3W	Car.	501 268 00
R26	12 kohms	5%	1/3W	Car.	501 412 00
R27	18 kohms	5%	1/3W	Car.	501 418 00
R28	10 kohms	5%	1/3W	Car.	501 410 00
R29	27 kohms	5%	1/3W	Car.	501 427 00
R30	8.2 kohms	5%	1/3W	Car.	501 382 00
R31	1 kohms	5%	1/3W	Car.	501 310 00
R32	2.7 kohms	5%	1/3W	Car.	501 327 00
R33	2.2 kohms	5%	1/3W	Car.	501 322 00
R34	680 ohms	5%	1/3W	Car.	501 268 00
R35	56 ohms	5%	1/3W	Car.	501 156 00
R36	680 ohms	5%	1/3W	Car.	501 268 00
R37	10 kohms	5%	1/3W	Car.	501 410 00
R38	33 ohms	5%	1/2W	Car.	502 133 00
R39	8.2 kohms	5%	1/3W	Car.	501 382 00
R40	15 kohms	5%	1/3W	Car.	501 415 00
R41	820 ohms	5%	1/3W	Car.	501 282 00
R42	270 ohms	5%	1/3W	Car.	501 227 00
R43	100 kohms	5%	1/3W	Car.	501 510 00
R44-45	10 kohms	5%	1/3W	Car.	501 410 00
R46	12 kohms	5%	1/3W	Car.	501 412 00
R47	470 ohms	5%	1/3W	Car.	501 247 00
R48	820 ohms	5%	1/3W	Car.	501 282 00
R49	220 ohms	5%	1/3W	Car.	501 222 00
R50	10 kohms	5%	1/3W	Car.	501 410 00
R51	22 ohms	5%	1/3W	Car.	501 122 00
R52	47 ohms	5%	1/3W	Car.	501 147 00
R53	5.6 kohms	5%	1/3W	Car.	501 356 00
R54	39 kohms	5%	1/3W	Car.	501 439 00
R55	330 ohms	5%	1/3W	Car.	501 233 00
R56	120 ohms	5%	1/3W	Car.	501 212 00
R57-58	470 ohms	5%	1/3W	Car.	501 247 00
R59	390 ohms	5%	1/3W	Car.	501 239 00

PARTS LIST

FOR

M 220 S 220

220R60	220 ohms	5%	1/3W	Car.	501 222 00
R61	100 ohms	5%	1/3W	Car.	501 210 00
R62	2.7 kohms	5%	1/3W	Car.	501 327 00
R63	10 kohms	5%	1/3W	Car.	501 410 00
R64	680 ohms	5%	1/3W	Car.	501 268 00
R65	2.7 kohms	5%	1/3W	Car.	501 327 00
R66	680 ohms	5%	1/3W	Car.	501 268 00
R67	1 ohms	5%	2W	WW	523 010 00
R68	820 ohms	5%	1/3W	Car.	501 282 00
R69-70	3.3 kohms	5%	1/3W	Car.	501 333 00
R71	6.8 kohms	5%	1/3W	Car.	501 368 00
R72	1 kohms	5%	1/3W	Car.	501 310 00
R73-74	560 ohms	5%	1/3W	Car.	501 256 00
R75	4.7 kohms	5%	1/3W	Car.	501 347 00
R76	6.8 kohms	5%	1/3W	Car.	501 368 00
R77	56 ohms	5%	1/3W	Car.	501 156 00
R78	27 ohms	5%	1/3W	Car.	501 127 00

220T 1	Transformator	105 216 01
T 2	Transformator	105 218 31
T 3	Transformator	105 215 51
T 4	Transformator	105 215 61
T 5	Transformator	105 215 71

220TR 1	BC547B	840 054 70
TR 2	BF240	840 024 00
TR 3	BC557B	840 055 70
TR 4	BC547B	840 054 70
TR 5-6	BF240	840 024 00
TR 7	BSX20	840 002 00
TR 8	BC547B	840 054 70
TR 9-10	BSX20	840 002 00

220X 1	12.5965MHz	385 201 52
X 2	12.5950MHz	385 201 62
X 3	TCXO 11,2 MHz Spec.B281	811 000 03

PARTS LIST

FOR

207

207C 1- 3	0.1 uF	10%	250V	Polyes.	624 510 00
C 4	4.7 nF		32V	Cer.	602 347 00
C 5	47 nF	-20/+80%	12V	Cer.	601 447 00
C 6- 9	47 nF	-20/+80%	16V	Cer.	601 447 00
C10	4.7 nF		32V	Cer.	602 347 00
C11-12	47 nF	-20/+80%	16V	Cer.	601 447 00
C13	47 nF	-20/+80%	12V	Cer.	601 447 00
C14-15	270 pF	1%	500V	Polyst.	615 227 00
C16-17	220 pF	1%	500V	Polyst.	615 222 00
C18-19	0.1 uF	10%	250V	Polyes.	624 510 00
C20	47 nF	-20/+80%	16V	Cer.	601 447 00
C21	820 pF	1%	500V	Polyst.	615 282 00
207IC1	74S74				850 747 41
IC2	74LS74				850 747 40
IC3	74H30				850 743 02
IC4	74LS20				850 742 01
IC5	93S10				850 931 00
IC6	74S32				850 743 21
IC7	74LS160				857 416 00
IC8	74LS93				850 749 32
IC9	74LS00				850 740 02
IC10	74LS02				850 740 21
IC11	93S10				850 931 00
IC12	74LS90				850 749 01
IC13	74LS160				857 416 00
IC14	93S10				850 931 00
IC15	74LS160				850 931 00
IC16	74LS 90				850 749 01
IC17	74163				857 416 30
IC18	74LS30				850 743 01
IC19-20	74LS00				850 740 02
IC21-22	7426.				850 742 60
IC23	74LS02				
207L 1- 2	100 uH	10%	RF-Choke		740 210 00
207PL 1	64 Way				751 000 22
207R 1	68 ohms	5%	1/3W	Car.	501 168 00
R 2	3.3 kohms	5%	1/3W	Car.	501 333 00
R 3	1.5 kohms	5%	1/3W	Car.	501 315 00
R 4	10 kohms	5%	1/3W	Car.	501 410 00
R 5	4.7 kohms	5%	1/3W	Car.	501 347 00

PARTS LIST

FOR

207

207R 6	330 ohms	5%	1/3W	Car.	501 233 00
R 7	1 kohm	5%	1/3W	Car.	501 310 00
R 8	220 ohms	5%	1/3W	Car.	501 222 00
R 9	82 ohms	5%	1/3W	Car.	501 182 00
R10	220 ohms	5%	1/3W	Car.	501 222 00
R11	82 ohms	5%	1/3W	Car.	501 182 00
R12	180 ohms	5%	1/3W	Car.	501 218 00
R13	47 ohms	5%	1/3W	Car.	501 147 00
R14	390 ohms	5%	1/3W	Car.	501 239 00
R15	3.3 kohms	5%	1/3W	Car.	501 333 00
R16	820 ohms	5%	1/3W	Car.	501 282 00
R17	100 ohms	5%	1/3W	Car.	501 210 00
R18	1 kohm	5%	1/3W	Car.	501 310 00
R19	330 ohms	5%	1/3W	Car.	501 233 00
R20	3.3 kohms	5%	1/3W	Car.	501 333 00
R21	390 ohms	5%	1/3W	Car.	501 239 00
R22-24	1 kohm	5%	1/3W	Car.	501 310 00
R25-26	1.5 kohms	5%	1/3W	Car.	501 315 00
R27	1 kohm	5%	1/3W	Car.	501 310 00
R28	4.7 kohms	5%	1/3W	Car.	501 347 00
R29	1 kohm	5%	1/3W	Car.	501 310 00
R30	10 kohms	5%	1/3W	Car.	501 410 00
R31-32	4.7 kohms	5%	1/3W	Car.	501 347 00
R33-37	1 kohm	5%	1/3W	Car.	501 310 00
R38	1.8 kohm	5%	1/3W	Car.	501 318 00
R39	1 kohm	5%	1/3W	Car.	501 310 00
R40	1.8 kohm	5%	1/3W	Car.	501 318 00
207TR1	BSX20				840 002 00
TR2- 3	BC547B				840 054 70
TR4	BSX20				840 002 00
TR5- 6	BC547B				840 054 70

PARTS LIST

FOR

208

208C 1	4.7 nF	-20/+80%	32V	Cer.	602 347 00
C 2	0.22 uF	10%	100V	Polyes.	623 522 00
C 3- 5	47 nF	-20/+80%	16V	Cer.	601 447 00
C 6	4.7 nF	-20/+80%	32V	Cer.	602 347 00
C 7	0.1 uF	10%	250V	Polyes.	624 510 00
C 8	47 nF	-20/+80%	16V	Cer.	601 447 00
C 9	0.1 uF	10%	250V	Polyes.	624 510 00
C10-11	47 nF	-20/+80%	16V	Cer.	601 447 00
C12	0.1 uF	10%	250V	Polyes.	624 510 00
C13	180 pF	1%	500V	Polyst.	615 218 00
C14-15	47 nF	-20/+80%	16V	Cer.	601 447 00
C16	0.1 uF	10%	250V	Polyes.	624 510 00
C17	0.47 uF	10%	100V	Polyes.	623 547 00
C18	130 pF	1%	500V	Polyst.	615 213 00
C19	5.6 pF	±0.25 pF	400V	Cer.	605 056 00
C20	220 pF	1%	500V	Polyst.	615 222 00
C21	33 pF	5%	400V	Cer.	605 133 00
C22	180 pF	1%	500V	Polyst.	615 218 00
C23	39 pF	5%	400V	Cer.	605 139 00
C24	180 pF	1%	500V	Polyst.	615 218 00
C25	22 pF	5%	400V	Cer.	605 122 00
C26	120 pF	1%	500V	Polyst.	615 212 00
C27-28	0.1 uF	10%	250V	Polyes.	624 510 00
C29	68 pF	5%	400V	Cer.	605 168 00
C30	220 pF	1%	500V	Polyst.	615 222 00
C31	0.68 uF	10%	100V	Polyes.	623 568 00
C32	68 pF	5%	400V	Cer.	605 168 00
C33	0.1 uF	10%	250V	Polyes.	624 510 00
C34	3.3 nF	1%	125V	Polyes.	613 333 00
C35	1.8 nF	1%	250V	Polyst.	614 318 00
208IC1	7805				850 780 50
IC2	74LS13				850 741 30
IC3	74LS73				850 747 30
IC4	1496				850 149 60
IC5	74LS13				850 741 30
IC6	74490				857 449 00
IC7-10	74LS93				850 749 32
IC11	74LS20				850 742 01
IC12	74LS00				850 740 02

PARTS LIST

FOR

208

208IC13	74121				857 412 10
IC14	74LS13				850 741 30
IC15	74LS00				850 740 02
IC16	74LS03				850 740 31
IC17	7416				850 741 60
208L 1	100 uH	10%	RF-Choke		740 210 00
L 2			Coil		105 218 92
L 3			Coil		105 219 11
L 4			Coil		105 219 01
L 5			Coil		105 218 81
L 6	100 uH	10%	RF-Choke		740 210 00
L7	22 uH	10%	RF-Choke		740 122 01
208PL1	32 Way				751 000 20
208R 1	4.7 kohms	5%	1/3W	Car.	501 347 00
R 2	680 ohms	5%	1/3W	Car.	501 268 00
R 3	1 kohm	5%	1/3W	Car.	501 310 00
R 4	12 kohms	5%	1/3W	Car.	501 415 00
R 5- 6	4.7 kohms	5%	1/3W	Car.	501 347 00
R 7	1.2 kohms	5%	1/3W	Car.	501 312 00
R 8	1.8 kohms	5%	1/3W	Car.	501 318 00
R 9	18 kohms	5%	1/3W	Car.	501 418 00
R10	12 kohms	5%	1/3W	Car.	501 412 00
R11-14	1 kohm	5%	1/3W	Car.	501 310 00
R15	680 ohms	5%	1/3W	Car.	501 268 00
R16	180 ohms	5%	1/3W	Car.	501 218 00
R17	560 ohms	5%	1/3W	Car.	501 256 00
R18	270 ohms	5%	1/3W	Car.	501 227 00
R19-20	470 ohms	5%	1/3W	Car.	501 247 00
R21-24	1 kohm	5%	1/3W	Car.	501 310 00
R25	15 kohms	5%	1/3W	Car.	501 415 00
R26	12 kohms	5%	1/3W	Car.	501 412 00
R27	470 ohms	5%	1/3W	Car.	501 247 00
R28	560 ohms	5%	1/3W	Car.	501 256 00
R29	10 kohms	5%	1/3W	Car.	501 410 00
R30	27 kohms	5%	1/3W	Car.	501 427 00
R31	100 kohms	5%	1/3W	Car.	501 510 00
R32	1 kohm	5%	1/3W	Car.	501 310 00
R33	390 ohms	5%	1/3W	Car.	501 239 00
R34	1.2 kohms	5%	1/3W	Car.	501 312 00

PARTS LIST

FOR

208

208R35	10 kohms	5%	1/3W	Car.	501 410 00
R36	47 kohms	5%	1/3W	Car.	501 447 00
R37	560 ohms	5%	1/3W	Car.	501 256 00
R38	150 ohms	5%	1/3W	Car.	501 215 00
R39	15 kohms	5%	1/3W	Car.	501 415 00
R40	4.7 kohms	5%	1/3W	Car.	501 347 00
R41-44	1 kohm	5%	1/3W	Car.	501 310 00
R45	4.7 kohms	5%	1/3W	Car.	501 347 00
R46-47	1 kohm	5%	1/3W	Car.	501 310 00
R48	1.8 kohms	5%	1/3W	Car.	501 318 00
R49	1 kohm	5%	1/3W	Car.	501 310 00
R50	5.6 kohm	5%	1/3W	Car.	501 356 00
208T 1			Transformator		105 219 21
208TR1	BSX20				840 002 00
TR2- 5	BC547B				840 054 70

PARTS LIST

FOR

209

209C 1	0.1 uF	10%	250V	Polyes.	624 510 00
C 2	68 nF	10%	100V	Polyes.	623 468 00
C 3	0.1 uF	10%	250V	Polyes.	624 510 00
C 4	22 nF	10%	250V	Polyes.	624 422 00
C 5	0.1 uF	10%	250V	Polyes.	624 510 00
C 6	22 nF	10%	250V	Polyes.	624 422 00
C 7	2.2 nF	1%	250V	Polyst.	614 322 00
C 8	3.3 nF	1%	125V	Polyst.	613 333 00
C 9	33 pF	5%	400V	Cer.	605 133 00
C10	47 nF	10%	250V	Polyes.	624 447 00
C11	33 pF	5%	400V	Cer.	605 133 00
C12	470 uF		16V	W.alum.	651 847 00
C13	1000 uF		16V	W.alum.	651 910 00
C14-16	100 uF		16V	W.alum.	651 810 00
C17-19	0.1 uF	10%	250V	Polyes.	624 510 00
C20-21	33 pF	5%	400V	Cer.	605 133 00
C22	0.22 uF	10%	250V	Polyes.	624 522 01
C23	0.47 uF	10%	100V	Polyes.	623 547 00
C24	22 nF	10%	250V	Polyes.	624 422 00
C25	10 nF	10%	250V	Polyes.	624 410 00
C26	47 nF	10%	250V	Polyes.	624 447 00
C27-29	10 nF	10%	250V	Polyes.	624 410 00
C30	47 nF	10%	250V	Polyes.	624 447 00
C31	100 pF	1%	500V	Polyst.	615 210 00
C32	12 pF	5%	400V	Cer.	605 112 00
C33	0.1 uF	10%	250V	Polyes.	624 510 00
C34	10 nF	10%	250V	Polyes.	624 410 00
C35	4.7 nF	-20/+80%	32V	Cer.	602 347 00
C36	470 pF	1%	500V	Polyst.	615 247 00
C37-38	0.1 uF	10%	250V	Polyes.	624 510 00
C39	470 uF		16V	W.alum.	651 847 00
C40-41	4.7 nF	-20/+80%	32V	Cer.	602 347 00
C42	0.1 uF	10%	250V	Polyes.	624 510 00
C43	1 uF	10%	100V	Polyes.	623 610 00
C44	47 nF	10%	250V	Polyes.	624 447 00
C45	47 nF	-20/+80%	16V	Cer.	601 447 00
C46	47 nF	10%	250V	Polyes.	624 447 00
C47	4.7 nF	-20/+80%	32V	Cer.	602 347 00
C48	47 nF	-20/+80%	16V	Cer.	601 447 00
C49-50	0.1 uF	10%	250V	Polyes.	624 510 00
C51	1 uF	10%	100V	Polyes.	623 610 00
C52	47 nF	-20/+80%	16V	Car.	601 447 00
C53	47 nF	-20/+80%	16V	Car.	601 447 00

PARTS LIST

FOR

209

209D 1- 2	BZX79C6V8	Zener			832 796 80
D 3	BB113				833 011 30
D 4	BB104				833 010 40
D 5-6	IS 920				830 192 00
209IC1- 4	301A				850 030 10
209L 1- 2	220 uH	10%	RF-Choke		740 222 00
L 3- 4	1 mH	10%	RF-Choke		740 310 01
L 5			Coil		105 218 61
L 6			Coil		105 218 72
L 7	220 uH	10%	RF-Choke		740 222 00
209PL 1	32 Way				751 000 20
209R 1	22 kohms	5%	1/3W	Car.	501 422 00
R 2	18 kohms	5%	1/3W	Car.	501 418 00
R 3- 4	270 ohms	5%	1/3W	Car.	501 227 00
R 5	22 kohms	5%	1/3W	Car.	501 422 00
R 6	18 kohms	5%	1/3W	Car.	501 418 00
R 7	33 ohms	5%	1/3W	Car.	501 133 00
R 8	22 ohms	5%	1/3W	Car.	501 122 00
R 9	39 ohms	5%	1/3W	Car.	501 139 00
R10-11	4.7 kohms	5%	1/3W	Car.	501 347 00
R12	18 kohms	5%	1/3W	Car.	501 418 00
R13-14	1 kohm		Var.		582 310 00
R15	47 kohms	5%	1/3W	Car.	501 447 00
R16	12 kohms	5%	1/3W	Car.	501 412 00
R17-18	4.7 kohms	5%	1/3W	Car.	501 347 00
R19	15 kohms	5%	1/3W	Car.	501 415 00
R20	56 kohms	5%	1/3W	Car.	501 456 00
R21	18 kohms	5%	1/3W	Car.	501 418 00
R22	12 kohms	5%	1/3W	Car.	501 412 00
R23	18 kohms	5%	1/3W	Car.	501 418 00
R24	8.2 kohms	5%	1/3W	Car.	501 382 00
R26	4.7 kohms	5%	1/3W	Car.	501 347 00
R27	100 kohms	5%	1/3W	Car.	501 510 00
R28	4.7 kohms	5%	1/3W	Car.	501 347 00
R29	560 kohms	5%	1/3W	Car.	501 556 00
R30	100 kohms	5%	1/3W	Car.	501 510 00
R31	2.2 kohms	5%	1/3W	Car.	501 322 00
R32	3.9 kohms	5%	1/3W	Car.	501 339 00
R33	1.5 kohms	5%	1/3W	Car.	501 315 00
R34	4.7 kohms	5%	1/3W	Car.	501 347 00
R35	220 ohms	5%	1/3W	Car.	501 222 00
R36	15 kohms	5%	1/3W	Car.	501 415 00
R37	560 ohms	5%	1/3W	Car.	501 256 00
R38	2.7 kohms	5%	1/3W	Car.	501 327 00
R39	100 ohms	5%	1/3W	Car.	501 210 00

PARTS LIST

FOR

209

209R40	1 kohm	5%	1/3W	Car.	501 310 00
R41	180 ohms	5%	1/3W	Car.	501 218 00
R42	22 kohms	5%	1/3W	Car.	501 422 00
R43	15 kohms	5%	1/3W	Car.	501 415 00
R44	3.3 kohms	5%	1/3W	Car.	501 333 00
R45	2.7 kohms	5%	1/3W	Car.	501 327 00
R46	4.7 kohms	5%	1/3W	Car.	501 347 00
R47	100 ohms	5%	1/3W	Car.	501 210 00
R48	1 kohm	5%	1/3W	Car.	501 310 00
R49	180 ohms	5%	1/3W	Car.	501 218 00
R50	39 ohms	5%	1/3W	Car.	501 139 00
R51	100 ohms	5%	1/3W	Car.	501 210 00
R52	120 ohms	5%	1/3W	Car.	501 212 00
R53	100 ohms	5%	1/3W	Car.	501 210 00
R54	100 kohms	5%	1/3W	Car.	501 510 00
R55	120 ohms	5%	1/3W	Car.	501 212 00
R56	4.7 kohms	5%	1/3W	Car.	501 347 00
R57	3.3 kohms	5%	1/3W	Car.	501 333 00
R58	10 kohms	5%	1/3W	Car.	501 410 00
R59	82 ohms	5%	1/3W	Car.	501 182 00
R60	56 ohms	5%	1/3W	Car.	501 156 00
R61	220 ohms	5%	1/3W	Car.	501 222 00
R62	10 kohms	5%	1/3W	Car.	501 410 00
R63	100 kohms	5%	1/3W	Car.	501 510 00
R64	120 ohms	5%	1/3W	Car.	501 212 00
R65	22 ohms	5%	1/3W	Car.	501 122 00
R66	22 kohms	5%	1/3W	Car.	501 422 00

209T 1		Transformator	105 218 51
T 2		Transformator	105 218 41

209TR1- 4	BF240	840 024 00
TR5	BSX20	840 002 00
TR6	BC547B	840 054 70
TR7	BSX20	840 002 00
TR8	BC547B	840 054 70

PARTS LIST

FOR

210

210C 1	330 pF	1%	500V	Polyst.	615 233 00
C 2	110 pF	1%	500V	Polyst.	615 211 00
C 3	22 pF	5%	400V	Cer.	605 122 00
C 4-6	0.1 uF	10%	100V	Polyes.	623 510 00
C 7	100 uF		25V	W. alum.	652 810 00
C 8	1000 uF		16V	W. alum.	651 910 00
C 9	33 pF	5%	400V	Cer.	605 133 00
C10-11	0.47 uF	10%	100V	Polyes.	623 547 00
C12	3.9 nF	1%	125V	Polyst.	613 339 00
C13-15	10 nF	10%	250V	Polyes.	624 410 00
C16-18	3.3 pF	±0.25 pF	400V	Cer.	605 033 00
C19	47 pF	5%	400V	Cer.	605 147 00
C20-22	0.1 uF	10%	100V	Polyes.	623 510 00
C23	100 uF		25V	W.alum.	651 910 00
C24	(4.5-26)pF	Var.			683 126 00
C25	100 uF		25V	W.alum	651 910 00
C26	(4.5-26)pF	Var.			683 126 00
C27	100 uF		25V	W.alum.	651 910 00
C28	(4.5-26)pF	Var.			683 126 00
C29-31	100 pF	1%	500V	Polyst.	615 210 00
C32-35	0.1 uF	10%	100V	Polyes.	623 510 00
C36-38	3.3 pF	±0.25 pF	400V	Cer.	605 033 00
C39	10 nF	10%	250V	Polyes.	624 410 00
C40	1 uF	10%	100V	Polyes.	623 610 00
C41	10 nF	10%	250V	Polyes.	624 410 00
C42	82 pF	5%	400V	Cer.	605 182 00
C43	0.1 uF	10%	100V	Polyes.	623 510 00
C44-45	10 nF	10%	250V	Polyes.	624 410 00
C46	0.1 uF	10%	100V	Polyes.	623 510 00
C47	10 nF	10%	250V	Polyes.	624 410 00
C48	51 pF	5%	400V	Cer.	605 151 00
C49	10 nF	10%	250V	Polyes.	624 410 00
C50	22 nF	10%	250V	Polyes.	624 422 00
C51	47 nF	-20/+80%	16V	Cer.	601 447 00
210D 1-4	BB109G				833 010 90
D 5	IS920				830 192 00
D 6-7	BB109G				833 010 90
D 8	1S920				830 192 00

PARTS LIST

FOR

210

210D 9-10	BB109G				833 010 90
D11	1S920				830 192 00
D12-21	BB109G				833 010 90
D22-24	BA 282				830 028 20
210IC1- 2	301A				850 030 10
IC3	74S132				857 413 20
210L 1- 2	220 uH	10%	RF-choke		740 222 00
L 3	22 uH	10%	RF-choke		740 122 00
L 4	10 uH	10%	RF-choke		740 110 00
L 5	2.2 uH	10%	RF-choke		740 022 00
L 6			Coil		105 219 42
L 7-8			Coil		105 219 51
L 9-11	100 uH	10%	RF-choke		740 210 00
L 12-13	10 uH	10%	RF-choke		740 110 00
210PL1					751 000 20
210R 1- 2	33 kohms	5%	1/3W	Car.	501 433 00
R 3	4.7 kohms	5%	1/3W	Car.	501 347 00
R 4	56 kohms	5%	1/3W	Car.	501 456 00
R 5	1 kohm	Var			582 310 00
R 6	330 ohms	5%	1/3W	Car.	501 233 00
R 7	4.7 kohms	5%	1/3W	Car.	501 347 00
R 8	12 kohms	5%	1/3W	Car.	501 412 00
R 9-10	10 kohms	5%	1/3W	Car.	501 410 00
R11	6.8 kohms	5%	1/3W	Car.	501 368 00
R12-14	100 ohms	5%	1/3W	Car.	501 210 00
R15-16	1 kohm	5%	1/3W	Car.	501 310 00
R17-18	10 kohms	5%	1/3W	Car.	501 410 00
R19-20	2.2 kohms	5%	1/3W	Car.	501 322 00
R21-23	180 kohms	5%	1/3W	Car.	501 518 00
R24-26	820 kohms	5%	1/3W	Car.	501 582 00
R27	180 ohms	5%	1/3W	Car.	501 218 00
R28	270 ohms	5%	1/3W	Car.	501 227 00
R29-30	180 ohms	5%	1/3W	Car.	501 218 00
R31	470 ohms	5%	1/3W	Car.	501 247 00
R32	180 ohms	5%	1/3W	Car.	501 218 00

PARTS LIST

FOR

210

210R33	330 ohms	5%	1/3W	Car.	501 233 00
R34	10 kohms	5%	1/3W	Car.	501 410 00
R35	1 kohm	5%	1/3W	Car.	501 310 00
R36	1.2 kohms	5%	1/3W	Car.	501 312 00
R37	1 kohm	5%	1/3W	Car.	501 310 00
R38	12 ohms	5%	1/3W	Car.	501 112 00
R39	150 ohms	5%	1/3W	Car.	501 215 00
R40	56 kohms	5%	1/3W	Car.	501 456 00
R41	120 ohms	5%	1/3W	Car.	501 212 00
R42	120 ohms	5%	1/3W	Car.	501 212 00
R43	220 ohms	5%	1/3W	Car.	501 222 00
R44	1.2 kohms	5%	1/3W	Car.	501 312 00
R45	1.5 kohms	5%	1/3W	Car.	501 315 00
R46	6.8 kohms	5%	1/3W	Car.	501 368 00
R47	2.2 kohms	5%	1/3W	Car.	501 322 00
R48	10 ohms	5%	1/3W	Car.	501 110 00
R49	68 ohms	5%	1/3W	Car.	501 168 00
R50	330 ohms	5%	1/3W	Car.	501 233 00
R51	56 ohms	5%	1/3W	Car.	501 156 00
R52	100 ohms	5%	1/3W	Car.	501 210 00
R53	1.5 kohms	5%	1/3W	Car.	501 315 00

210TR1- 3	BFX 89	840 008 90
TR4	BC547B	840 054 70
TR5- 6	BC577	840 055 70
TR7- 9	E310	840 031 00
TR10	BC547B	840 054 70
TR11	BSX20	840 002 00
TR12	BF240	840 024 00
TR13	BFW17A	840 001 70
TR14	BSX20	840 002 00

PARTS LIST

FOR

211

211C 1	0.47 uF	10%	100V	Polyes.	623 547 00
C 2	1000 uF		10V	W.alum.	651 910 00
C 3	22 uF		16V	Tan	651 722 00
C 4- 7	47 nF	-20/+80%	16V	Cer.	601 447 00
C 8	0.1 uF	10%	100V	Polyes.	623 510 00
C 9	10 nF	10%	250V	Polyes.	624 410 00
C10	2.2 nF	1%	250V	Polyst.	614 322 00
C11	4.7 nF	-20/+80%	32V	Cer.	602 347 00
C12	100 uF		16V	W. alum.	651 810 00
C13	820 uF	1%	250V	Polyst.	615 282 00
211D 1- 2	1S920				830 192 00
211IC1	SN74148				857 414 81
IC2	uA7805				850 780 50
IC3	SN74LS93				850 749 32
IC4	NE555				850 055 50
IC5	Texas				857 414 51
IC6- 7	SDA20				879 000 00
IC8	MAN82				824 008 20
IC9	74LS13				850 741 30
IC10	74LS74				850 747 40
IC11-13	MAN82				824 008 20
IC14	2003A				850 200 30
IC15	7448				850 744 80
IC16-17	MAN82				824 008 20
211L1	4.7 uH	10%	RF Choke		740 047 00
211ME1		1 mA 300 ohms			873 000 10
211R 1	2.7 kohms	5%	1/3W	Car.	501 327 00
R 2	1.8 kohms	5%	1/3W	Car.	501 318 00
R 3	2.2 ohms	5%	2W	WW	523 022 00
R 4	2.7 kohms	5%	1/3W	Car.	501 327 00
R 5- 6	1 kohm	5%	1/3W	Car.	501 310 00
R 7-10	4.7 kohms	5%	1/3W	Car.	501 347 00
R11	10 kohms	5%	1/3W	Car.	501 410 00
R12-14	4.7 kohms	5%	1/3W	Car.	501 347 00
R15	10 kohms	5%	1/3W	Car.	501 410 00
R16-19	4.7 kohms	5%	1/3W	Car.	501 347 00
R20	10 kohms	5%	1/3W	Car.	501 410 00
R21	1 kohm	5%	1/3W	Car.	501 310 00
R22	47 kohms	Var.		Log.	355 222 13
R23	2.2 kohms	5%	1/3W	Car.	501 322 00
R24-25	82 ohms	5%	1/3W	Car.	501 182 00

PARTS LIST

FOR

211

211R26-27	10 kohms	Var.			501 347 00
R28-33	82 ohms	5%	1/3W	Car.	501 182 00
R34	4.7 kohms	5%	1/3W	Car.	501 347 00
R35-40	1 kohm	5%	1/3W	Car.	501 310 00
R41-43	27 ohms	5%	1/3W	Car.	501 127 00
R44	1 kohm	5%	1/3W	Car.	501 310 00
R45-47	27 ohms	5%	1/3W	Car.	501 127 00
R48	1 kohm	5%	1/3W	Car.	501 310 00
R49	27 ohms	5%	1/3W	Car.	501 127 00
R50	68 ohms	5%	1/3W	Car.	501 168 00
211S 1- 3	M61-0110				763 000 07
S 4	M51-0136				763 000 08
S 5	M61-0110				763 000 07
211SK1- 6	Socket				751 000 25
211SL1	7V	30 mA			
211TR1	BC558B				840 055 80
TR2- 5	BC547B				840 054 70
TR6-11	BC327				840 032 70
211TW1	Tuning Wheel				345 221 74

PARTS LIST

FOR

212

212C 1	4.7 nF	-20/+80%	32V	Cer.	602 347 00
C 2	10 nF	-20/+80%	32V	Cer.	602 410 00
C 3	4.7 nF	1%	125V	Polyst.	613 347 00
C 4	22 uF		16V	Tan.	651 722 00
C 5	1.8 nF	1%	250V	Polyst.	614 318 00
C 6-14	47 nF	-20/+80%	16V	Cer.	601 447 00
C15	100 pF	1%	500V	Polyst.	615 210 00
C16-35	1 nF	-20/+80%	25V	Cer.	602 310 00
C36	4.7 nF	-20/+80%	32V	Cer.	602 347 00
C37	470 uF		6.3V	W.alum.	650 847 00
C38	15 nF	1%	63V	Polyst.	612 415 00
C39	390 PF	1%	500V	Polyst.	615 239 00
212D 1- 3	AAZ17				830 001 70
D 4- 5	1S920				830 192 00
212IC1	74LS08				850 740 80
IC2	7404				850 740 40
IC3	74LS05				850 740 51
IC4	74LS123				857 412 30
IC5	74LS09				850 740 90
IC6 - 7	74LS00				850 740 02
IC8 - 9	74LS32				850 743 20
IC10-15	74LS168				857 416 80
IC16	74LS32				850 743 20
IC17	74LS08				850 740 80
IC18	74LS32				850 743 20
IC19-20	74LS08				850 740 80
IC21	74LS32				850 743 20
IC22	74LS08				850 740 80
IC23	74LS32				850 743 20
IC24	74LS08				850 740 80
IC25-28	74LS151				857 415 10
IC29	74LS74				850 747 40
IC30	7409A				850 740 91
IC31	74LS05				850 740 51
212PL1	64 Way				751 000 22

PARTS LIST

FOR

212

212R 1	100 ohms	5%	1/3W	Car.	501 210 00
R 2	470 ohms	5%	1/3W	Car.	501 247 00
R 3- 7	1 kohm	5%	1/3W	Car.	501 310 00
R 8	1.8 kohms	5%	1/3W	Car.	501 318 00
R 9	4.7 kohms	5%	1/3W	Car.	501 347 00
R10	10 kohms	5%	1/3W	Car.	501 410 00
R11	27 kohms	5%	1/3W	Car.	501 427 00
R12-13	10 kohms	5%	1/3W	Car.	501 410 00
R14	2.7 kohms	5%	1/3W	Car.	501 327 00
R15	3.3 kohms	5%	1/3W	Car.	501 333 00
R16	1.5 kohms	5%	1/3W	Car.	501 315 00
R17	18 kohms	5%	1/3W	Car.	501 418 00
R18	10 kohms	5%	1/3W	Car.	501 410 00

PARTS LIST

FOR

214

214C 1- 2	47 nF	-20/+80%	16V	Cer.	601 447 00
214IC1	74S196				857 419 60
214L 1	220 uH	10%	RF Choke		740 222 00
214R 1	1 kohm	5%	1/3W	Car.	501 310 00
R 2	1.5 kohms	5%	1/3W	Car.	501 315 00

PARTS LIST

FOR

228

228C 1- 3	47 nF	-20/+80%	16V	Cer.	601 447 00
228D 1	1S920				830 192 00
228L 1	100 uH	10%	RF Choke		740 210 00
228R 1	100 kohms	5%	1/3W	Car.	501 510 00
R 2	220 ohms	5%	1/2W	Car.	502 222 00
R 3	5.6 kohms	5%	1/3W	Car.	501 356 00
R 4	2.7 kohms	5%	1/3W	Car.	501 327 00
R 5	1.2 kohms	5%	1/3W	Car.	501 312 00
R 6	820 ohms	5%	1/3W	Car.	501 282 00
R 7	1 kohm	5%	1/3W	Car.	501 310 00
R 8	10 kohms	5%	1/3W	Car.	501 410 00
R 9	1 kohm	5%	1/3W	Car.	501 310 00
228TR 1- 4	BC547B				840 054 70

PARTS LIST

FOR

293

293	C1-3	47 nF	-20/+80%	16V	Cer	601 447 00
	C4-5	270 pF	1%	500V	Polyst.	615 227 00
	C6-7	0.1 uF	10%	100V	Polyes	623 510 00
	C8	2.2 uF	10%	16V	Tan.	652 622 00
293	IC1	74LS90				850 749 01
	IC2	74LS163				857 416 31
	IC3	74LS00				850 740 02
293	L1-4	100uH	10%	RF-Choke		740 210 00
293	R1	1 kohm	5%	1/3W	Car.	501 310 00
	R2	10 kohms	5%	1/3W	Car.	501 410 00
	R3	1.5 kohms	5%	1/3W	Car.	501 315 00
	R4	12 kohms	5%	1/3W	Car.	501 412 00
	R5	680 ohms	5%	1/3W	Car.	501 268 00
	R6	1 kohm	5%	1/3W	Car.	501 310 00
	R7	150 ohms	5%	1/3W	Car.	501 215 00
	R8	1 kohm	5%	1/3W	Car.	501 310 00
	R9	5.6 kohms	5%	1/3W	Car.	501 356 00
	R10	390 ohms	5%	1/3W	Car.	501 239 00
	R11	1 kohm	5%	1/3W	Car.	501 310 00
	R12-13	3.9 kohms	5%	1/3W	Car.	501 339 00
	R 14-15	1 kohm	5%	1/3W	Car.	501 310 00
	R16	12 kohms	5%	1/3W	Car.	501 412 00
	R17-19	1 kohm	5%	1/3W	Car.	501 310 00
293	TR1	BF240				840 024 00
	TR2-4	BSX20				840 002 00

PARTS LIST

FOR

287

287C1-2	47 nF	10%	630V	Polyes.	626 447 00
C3-4	0.1 uF	10%	250V	Polyes.	624 510 00
C5	0.47 uF	10%	630V	Polyes.	626 547 00
C6	1 uF	10%	100V	Polyes.	623 610 01
C7-14	0.1 uF	10%	250V	Polyes.	624 510 00
C15	0.47 uF	10%	630V	Polyes.	626 547 00
C16	1 uF	10%	100V	Polyes.	623 610 00
C17	4700 uF		25V	W.alum.	652 947 01
C18	2200 uF		40V	W.alum.	652 922 00
C19	470 uF		40V	W.alum.	652 847 00
C20-21	1 uF	10%	100V	Polyes.	623 610 00
C22-24	47 nF	10%	250V	Polyes.	624 447 00
C25	1 uF	10%	100V	Polyes.	623 610 00
C26	100 uF		25V	W.alum.	652 810 00
C27	100 uF		25V	W.alum.	652 810 00
287D1-8	1N5401				831 540 10
D9-15	1S920				830 192 00
D16	BZX79 B6V8	Zener			832 796 81
D17-18	BZX79 B7V5	Zener			832 797 50
287L1-4	25uH	RF Choke			740 125 00
287R1	220 kohms	5%	1W	Car.	504 522 00
R2	1.5 kohms	5%	1W	Car.	504 315 00
R3	220 ohms	5%	5W	WW	527 222 00
R4	10 kohms	5%	1/3W	Car.	501 410 00
R5	12 ohms	5%	3/4W	Car.	503 112 00
R6	12 kohms	5%	1/3W	Car.	501 412 00
R7	100 ohms	5%	1/2W	Car.	502 210 00
R8	4.7 kohms	5%	1/3W	Car.	501 347 00
R9-10	1 kohm	5%	1/3W	Car.	501 310 00
R11	220 kohms	5%	1/3W	Car.	501 522 00
R12	27 ohms	5%	1/3W	Car.	501 127 00
R13	1 kohm	5%	1/3W	Car.	501 310 00
R14	4.7 kohms	5%	1/3W	Car.	501 347 00
R15	10 kohms	5%	1/3W	Car.	501 410 00
R16	10 kohms	5%	1/3W	Car.	501 410 00
R17	4.7 kohms	5%	1/3W	Car.	501 347 00
R18	1.2 kohm	5%	1/3W	Car.	501 312 00
R19	100 ohms	5%	1/2W	Car.	502 210 00
R20	10 kohms	5%	1/3W	Car.	501 410 00
R21	220 ohms	5%	5W	WW	527 220 00

PARTS LIST

FOR

287

287R22	10 kohms	5%	1/3W	Car.	501 410 00
R23	120 ohms	5%	1/2W	Car.	502 212 00
R24	4.7 kohms	5%	1/3W	Car.	501 347 00
R25	68 ohms	5%	1/3W	Car.	501 168 00
R26	15 ohms	5%	1/2W	Car.	502 115 00
R27	68 ohms	5%	1/2W	Car.	502 168 00
R28	1 ohm	5%	5W	WW	527 010 01
R29	150 ohms	5%	1/2W	Car.	502 215 00
R30	82 ohms	5%	3W	WW	526 182 00
R31	68 ohms	5%	1/3W	Car.	501 168 00
R32	10 kohms	5%	1/3W	Car.	501 410 00
R33	100 ohms	5%	1/3W	Car.	501 210 00
R34	3.3 kohms	5%	1/2W	Car.	502 333 00
287RL1	1 change over, 24 V Coil				780 000 21
RL2	1 change over, 24 V Coil				780 000 19
287TR1	BC337-25				846 033 70
TR2-3	BC557B				840 055 70
TR4	2N6027	PUT			844 602 70
TR5	BC337-25				846 033 70
TR6	BC547B				840 054 70
TR7	BC337-25				846 033 70
TR8	BC135-10				842 013 50

PARTS LIST

FOR

288

Version S1 and S2

288	C1	1u	10%	250V	Polyes	624 610 00
	C2-3	47nF	10%	250V	Polyes	624 447 00
288	D1	BZY93C33R				832 933 00
	D2	MV5353	Zener			823 000 01
	D3	1S920				830 192 00
288	FS1	2.5A	Fast	6.3 x 32mm		720 325 00
	FS2	0.315A/220V	Slow	6.3 x 32mm		720 231 51
	FS2	0.63A/110V	Slow	6.3 x 32mm		720 263 00
	FS3	1A	Fast	6.3 x 32mm		720 310 00
288	R1	56 ohms		3W		526 156 00
	R2	82 ohms	5%	1/3 W		501 182 00
288	S1		Safety			764 000 02
288	SK1		24Way	Version S-1 only		751 000 53
	SK2		3 Way			751 000 56
288	SK3		2 Way			751 000 44
	SK4		12Way			751 000 29
288	T1		Mains			384 209 11
	T2		Converter			384 209 03
	T3		Line			385 242 11
288	TR1-2	2N6254				842 625 40
	TR3	2N3055				842 305 50
	TR4	BD23410				842 023 40
	TR5	2N3055				842 305 50
288	TS1		4 Way			770 000 16
	TS2		12 Way	Version S-2 only		770 000 04

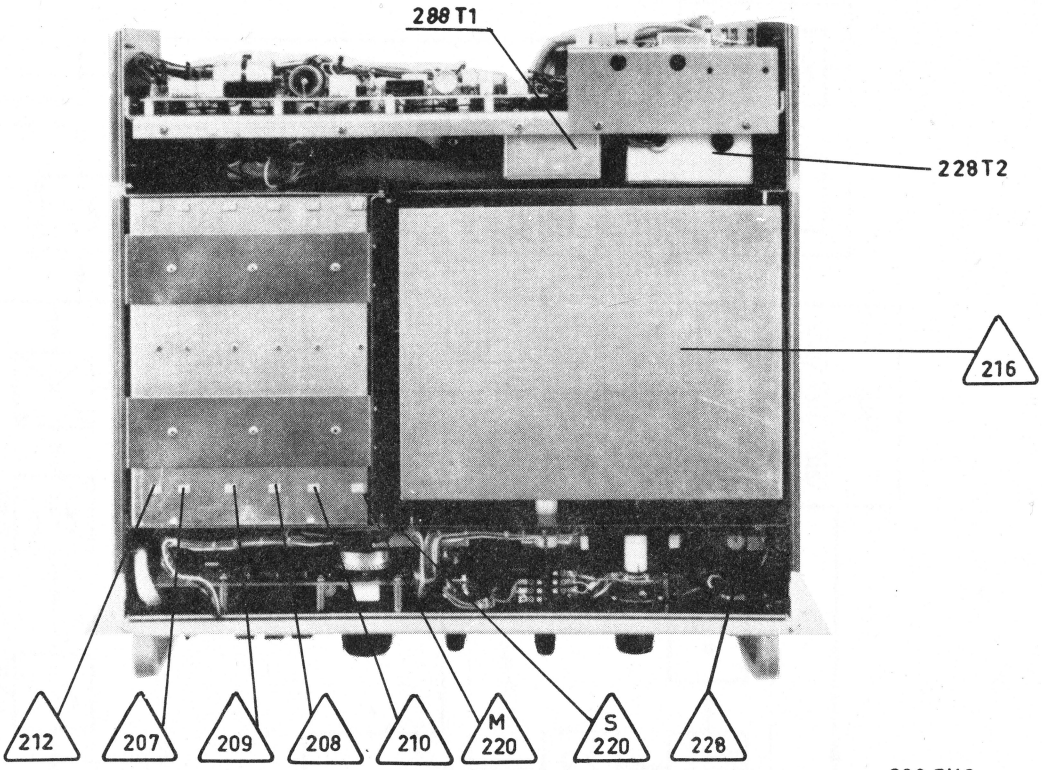

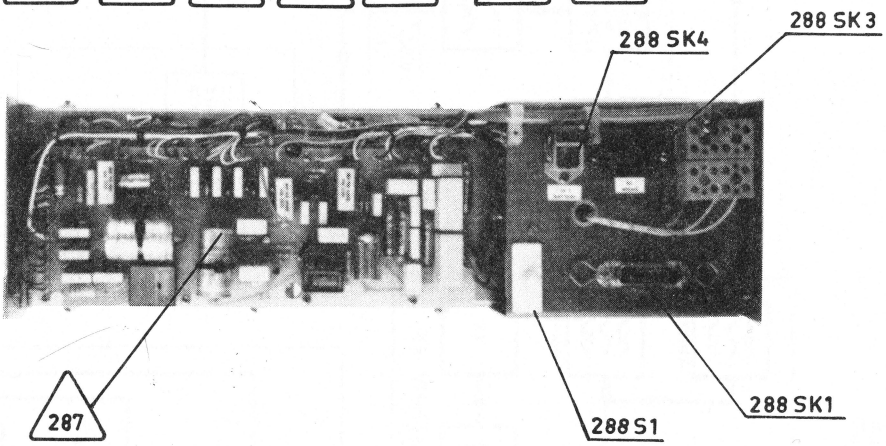

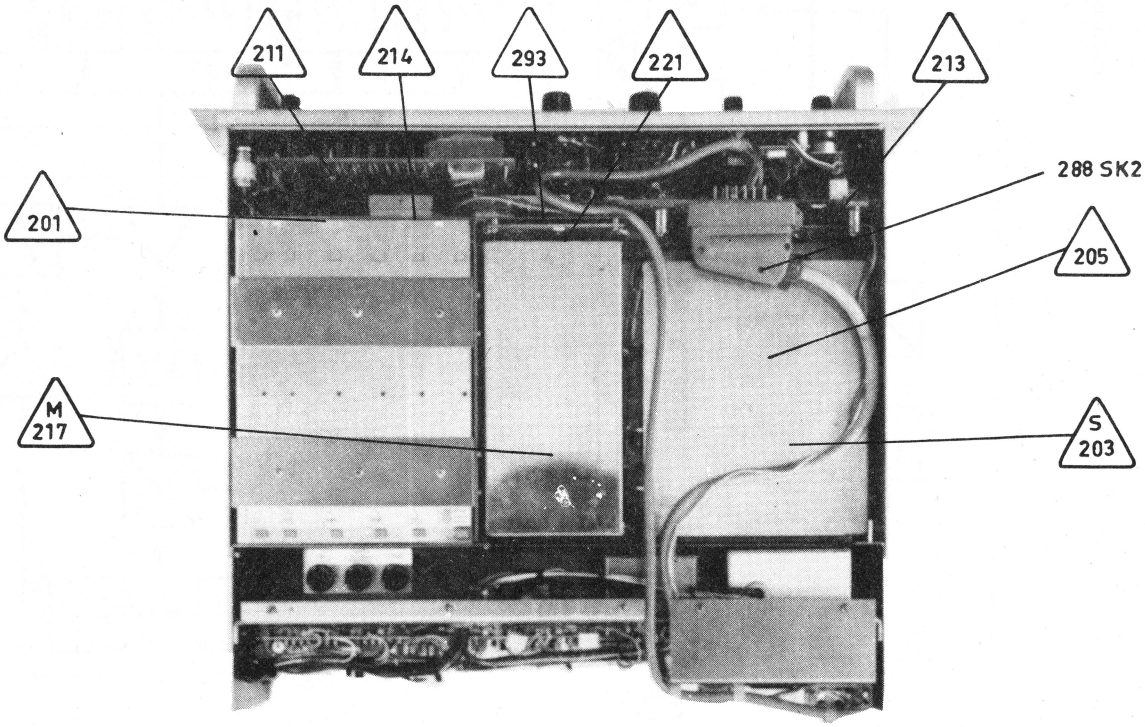

LOCATION OF CIRCUIT BOARDS
RECEIVER 5000 S1

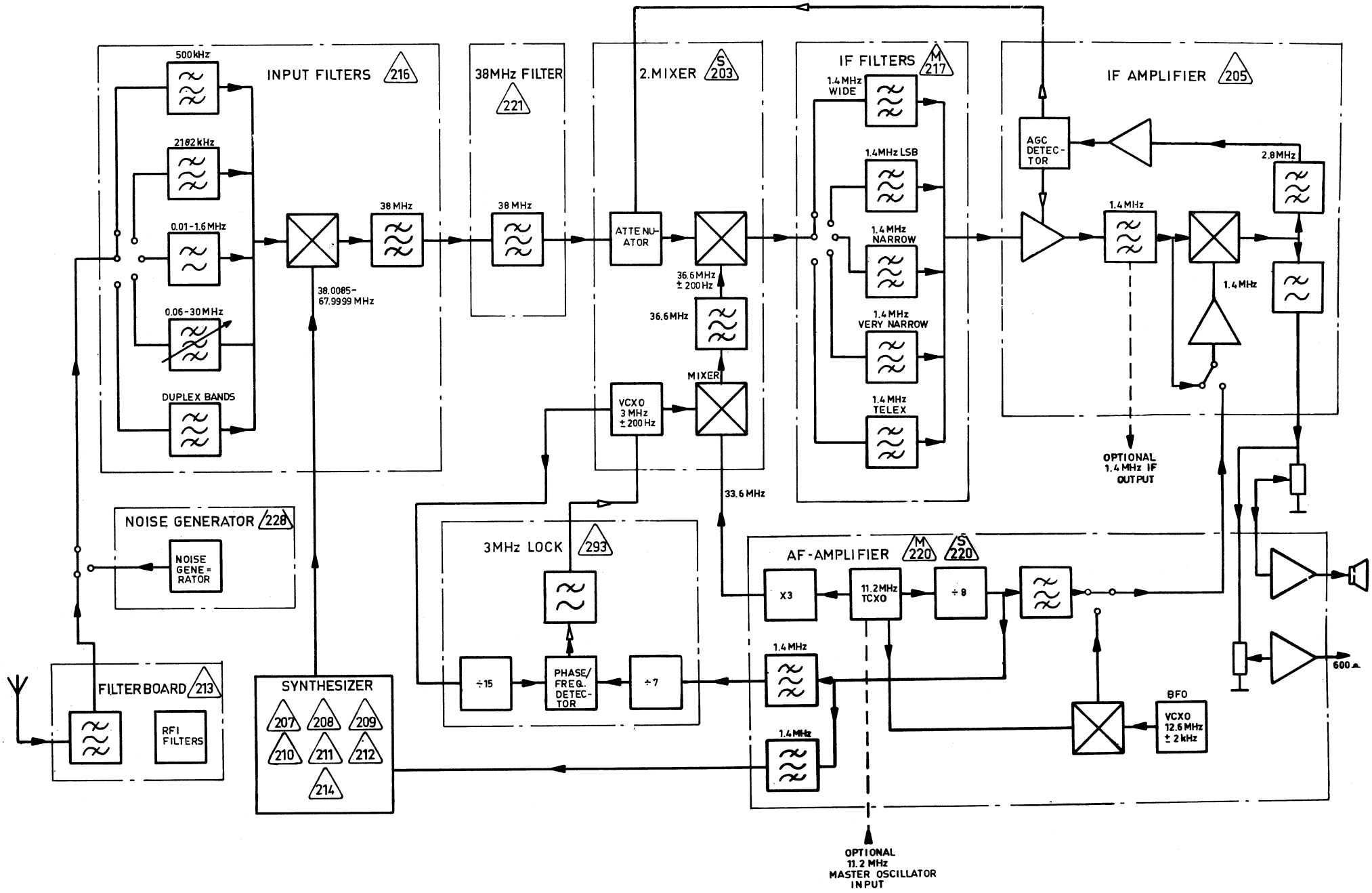

995 242 21

BLOCK DIAGRAM SIGNAL PATH
R 5001 VERSION S1 AND S2

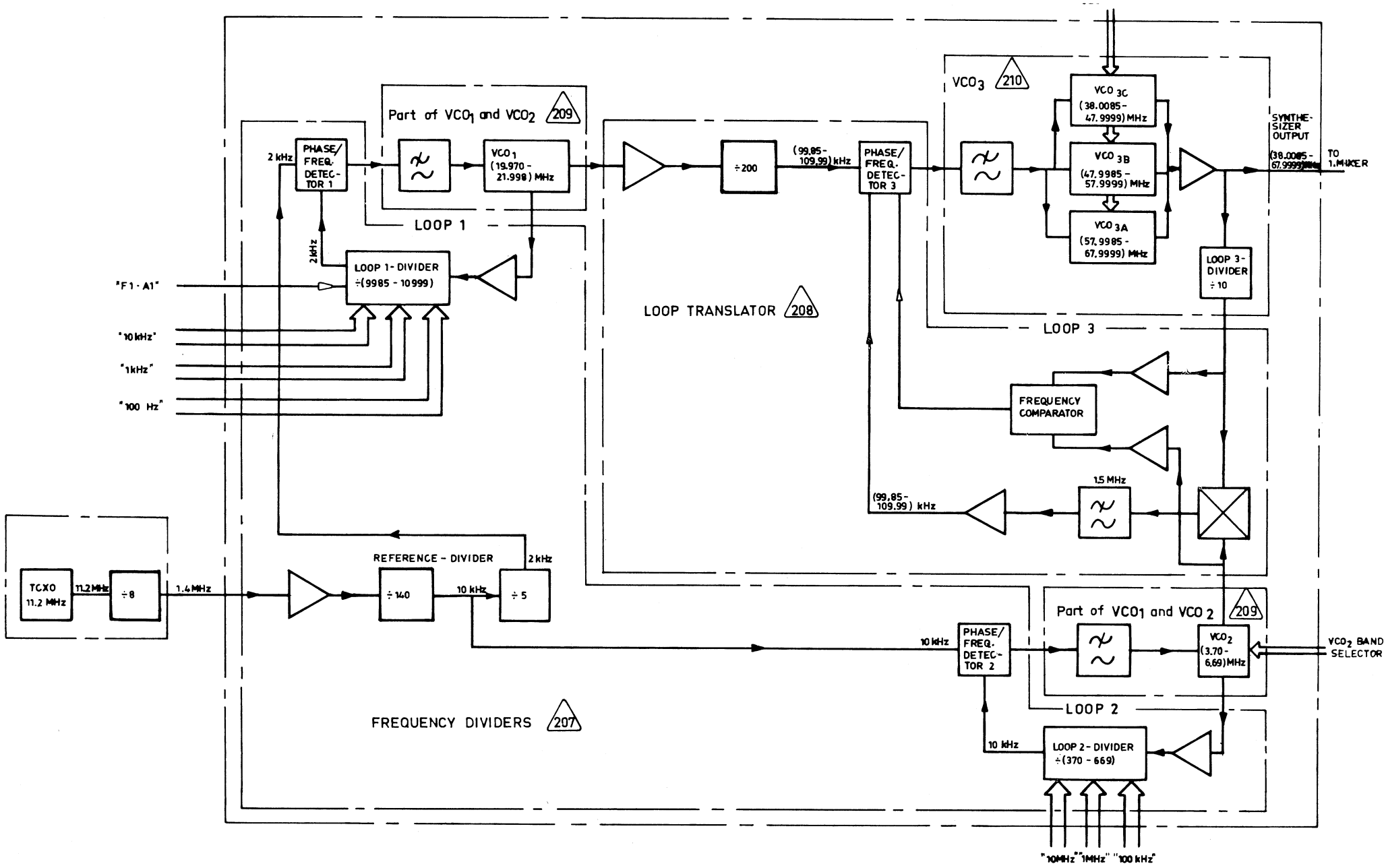

BLOCK DIAGRAM, FREQUENCY SYNTHESIZER

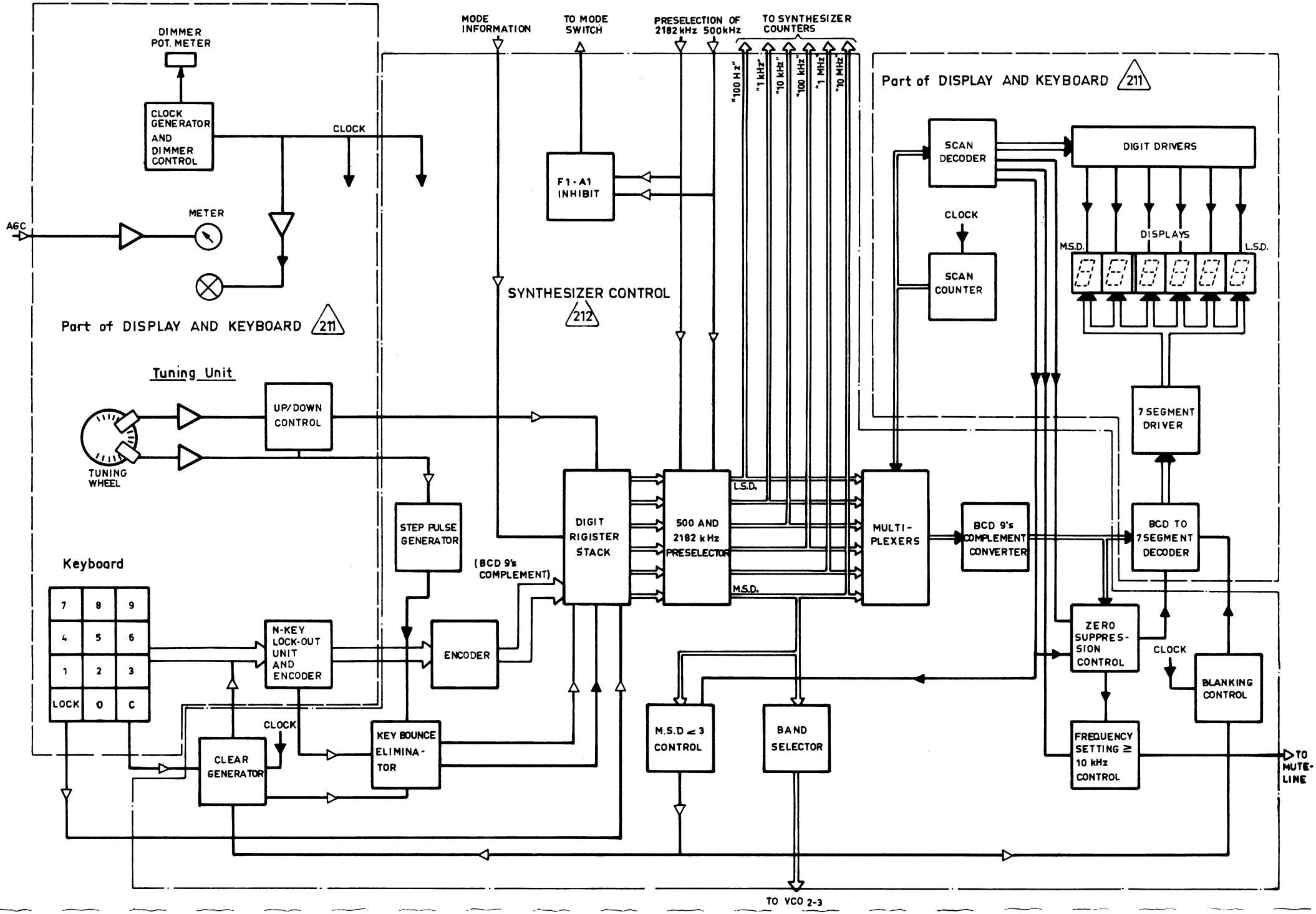

BLOCK DIAGRAM FREQUENCY SELECTION

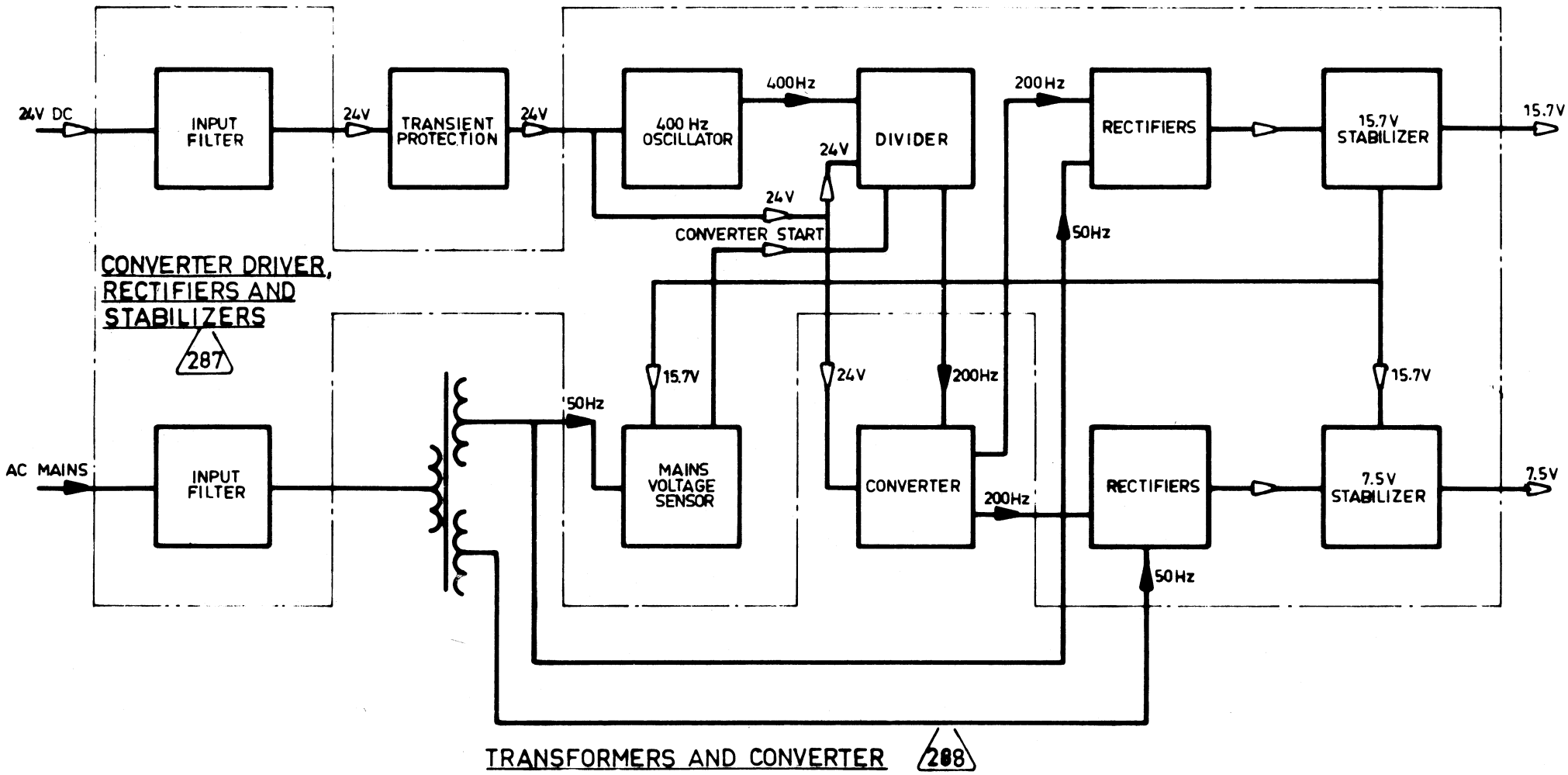

994 215 71

BLOCK DIAGRAM, P5013 24 DC/AC POWER PACK

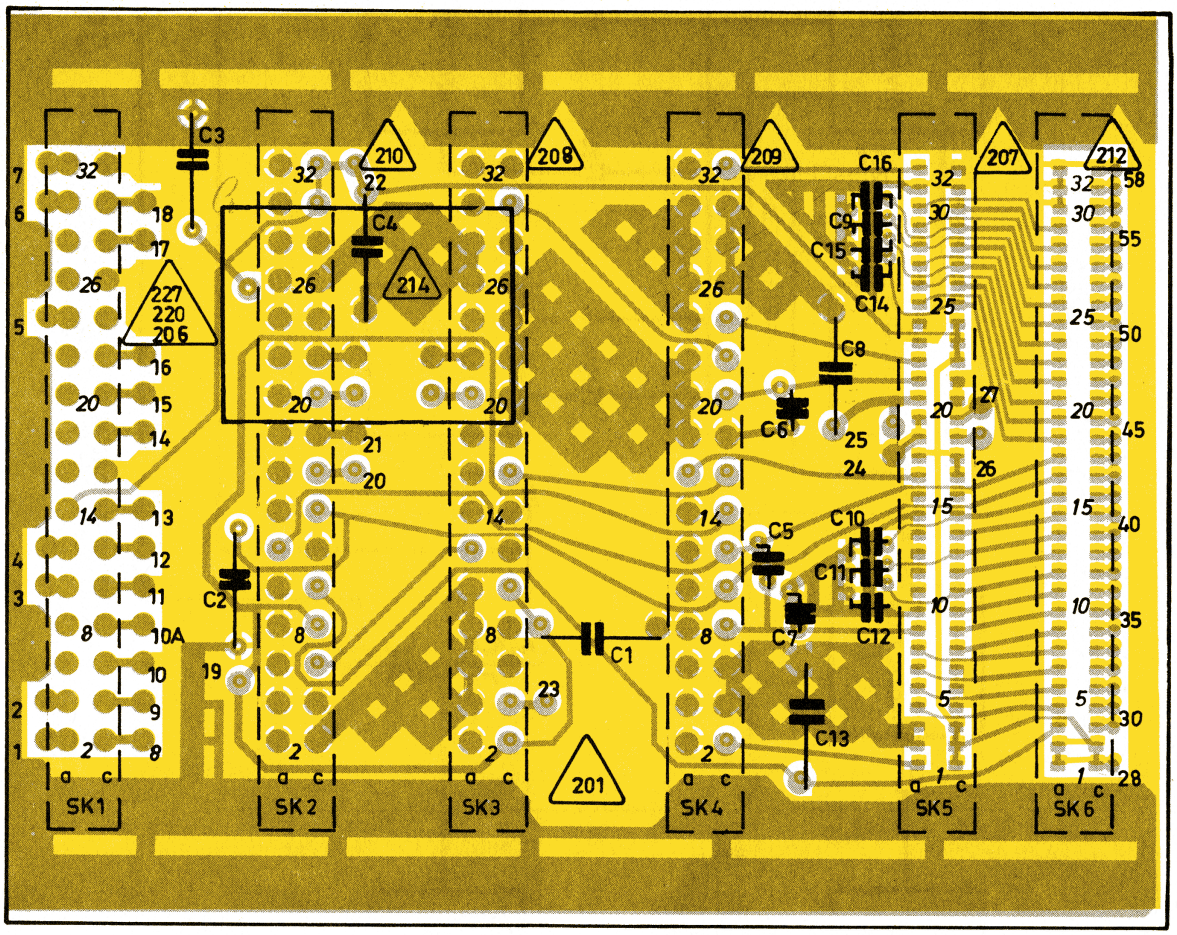

995 204 32

PRINTED CIRCUIT BOARD 201
VIEWED FROM SOLDER SIDE

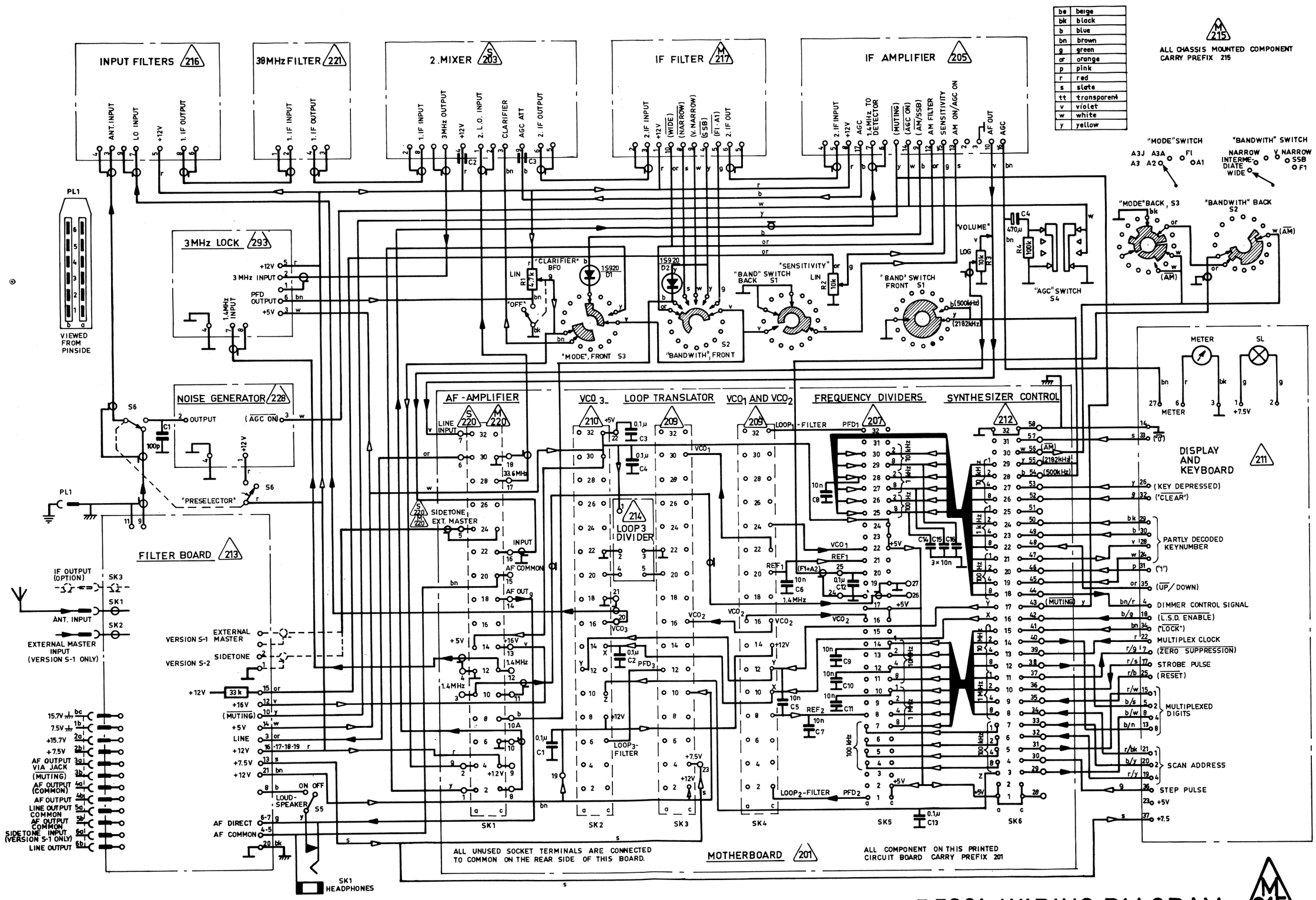

R5001 WIRING DIAGRAM VERSION S2

99 5 242 63

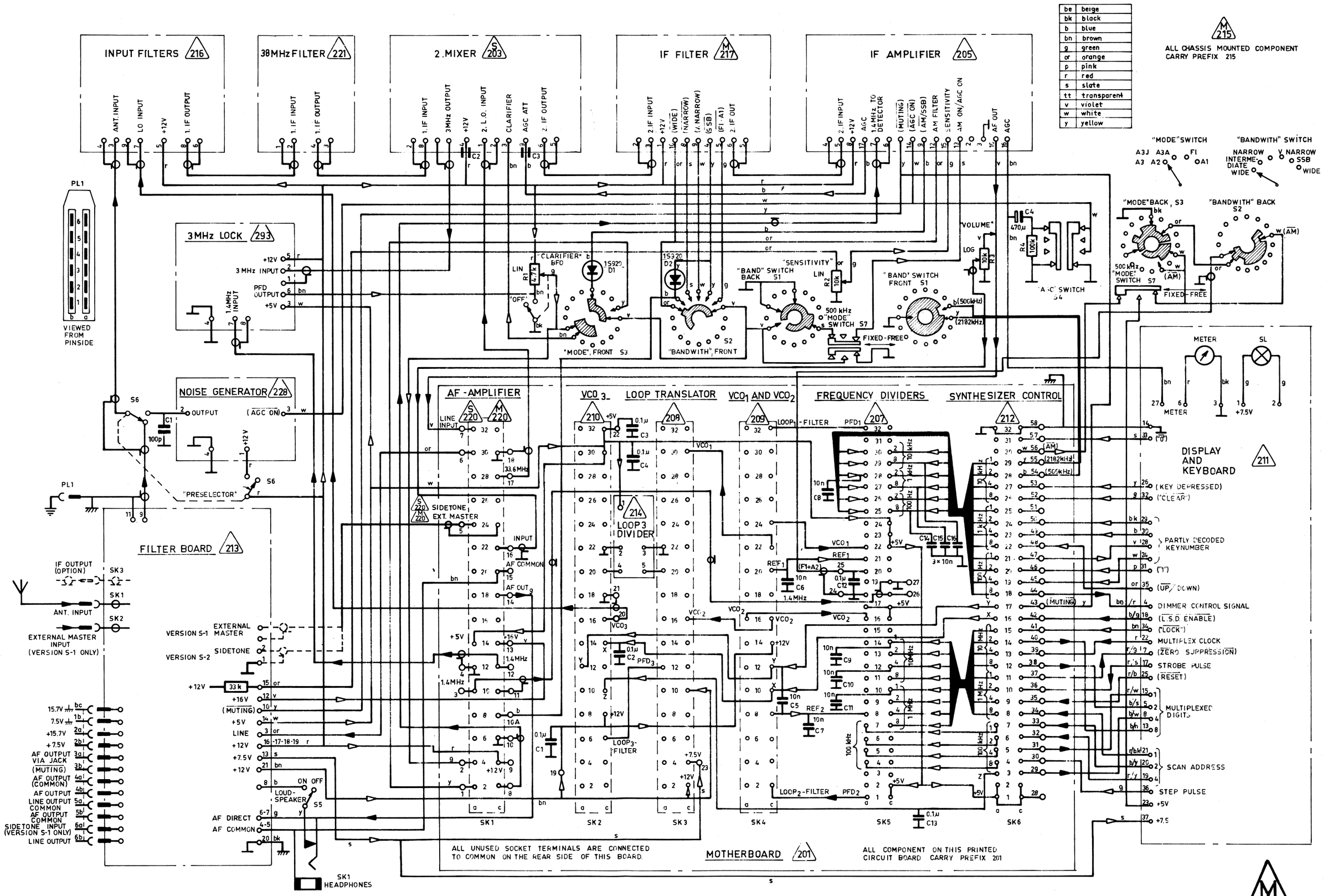

R5001 WIRING DIAGRAM VERSION S1

99 5 243 24

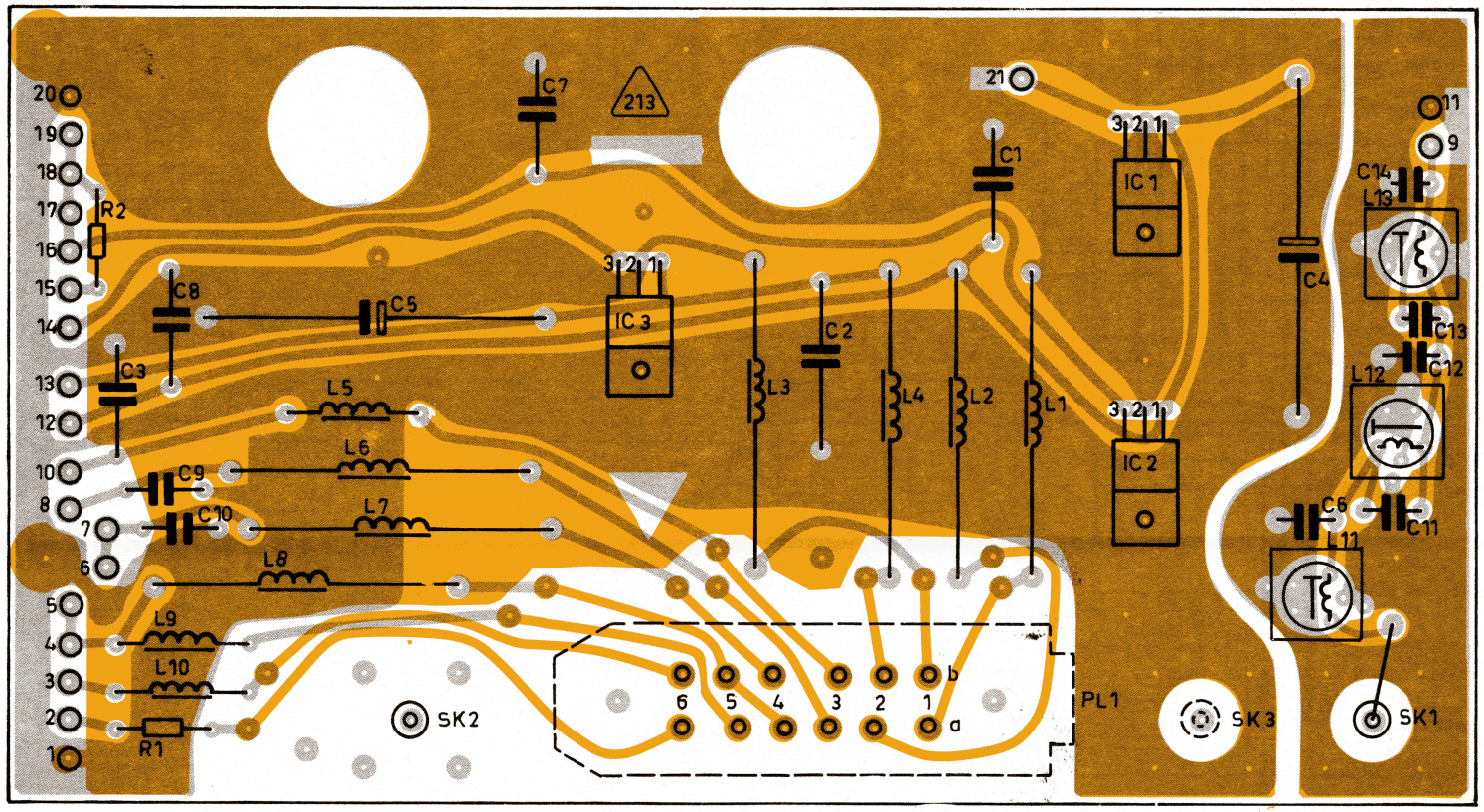

995 214 71

PRINTED CIRCUIT BOARD 213
VIEWED FROM COMPONENT SIDE

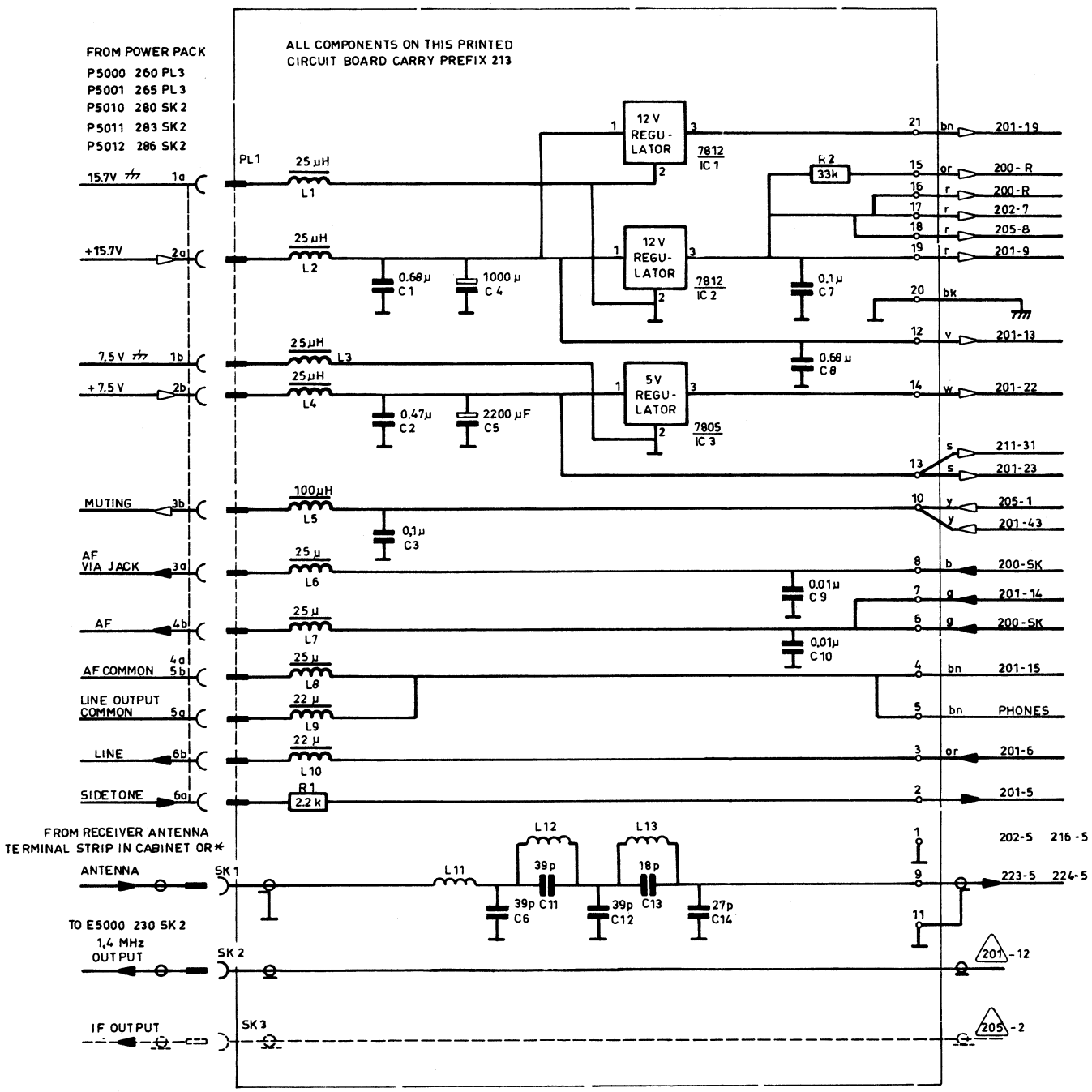

* P5010 280 PL1
P5011 283 PL1
P5012 286 PL1

b	blue
be	beige
bk	black
bn	brown
g	green
or	orange
p	pink
r	red
s	slate (grey)
v	violet
y	yellow
w	white

7805
7812

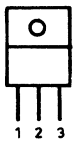

TOP VIEW

995 214 8 (3)

FILTERBOARD 213

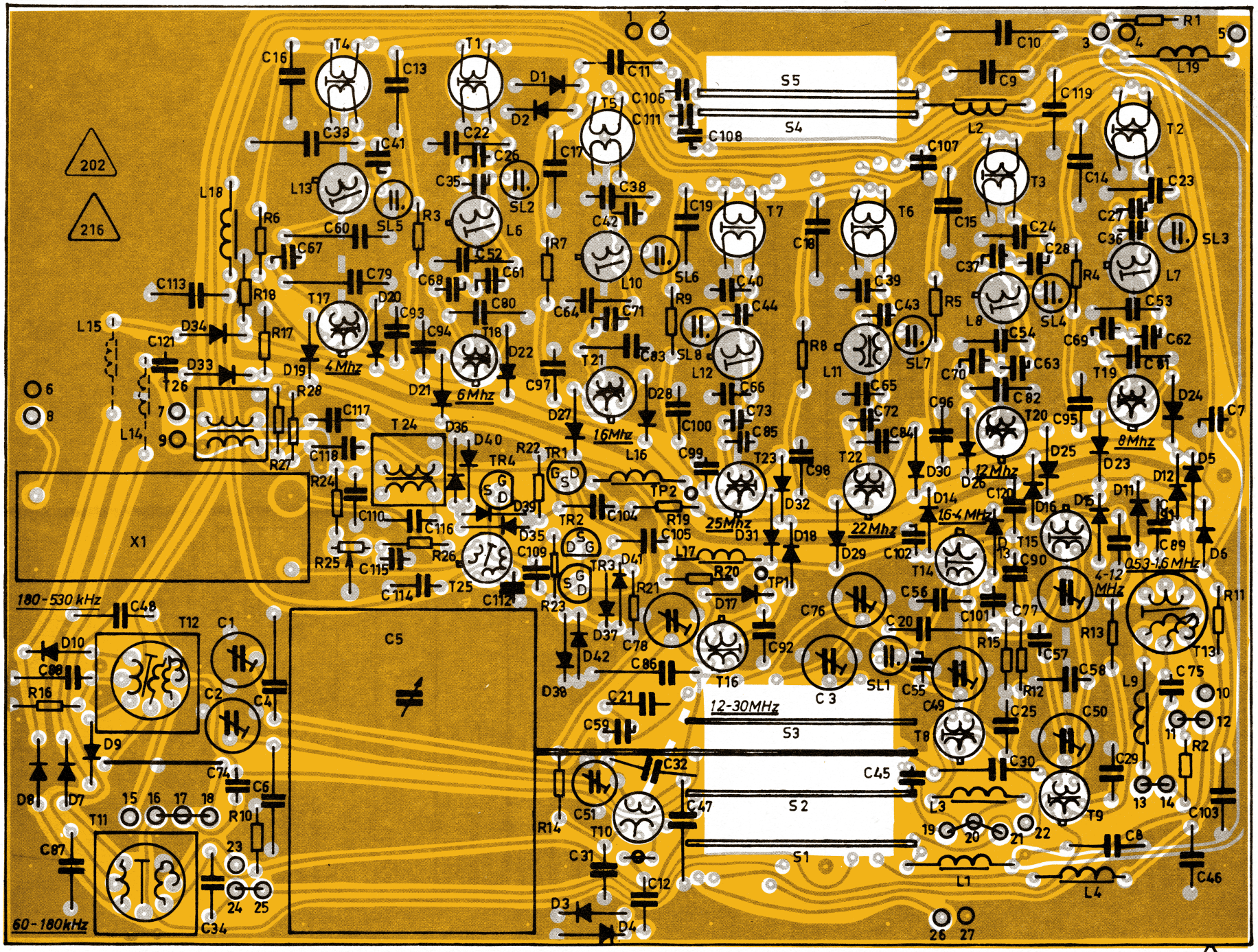

PRINTED CIRCUIT BOARD 202 or 216
VIEWED FROM COMPONENT SIDE

995 204 82

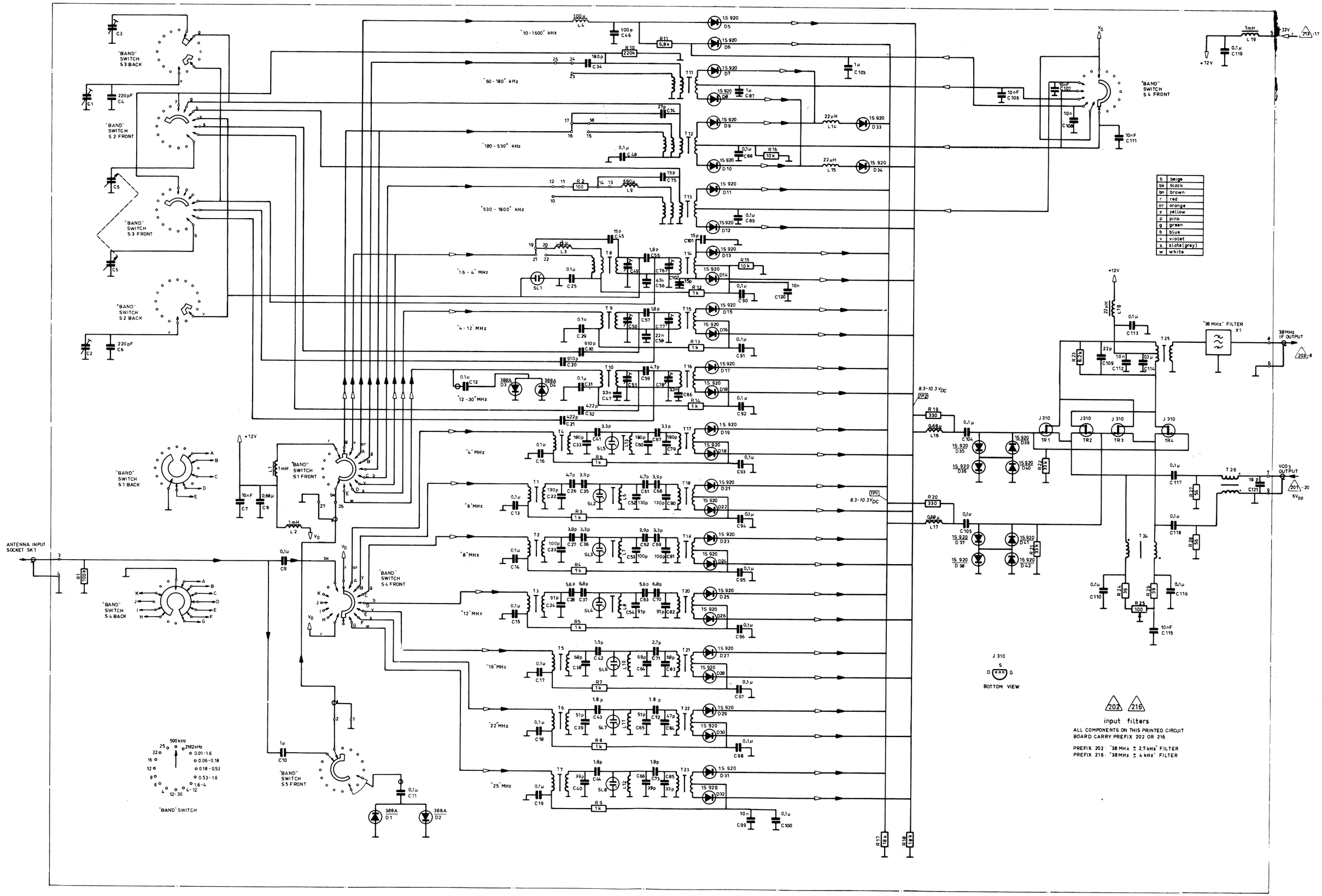

995 205 2 6

INPUT FILTERS 202 216

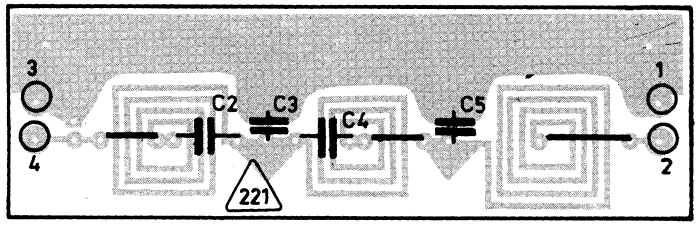

995 239 82

PRINTED CIRCUIT BOARD 221
VIEWED FROM COMPONENT SIDE

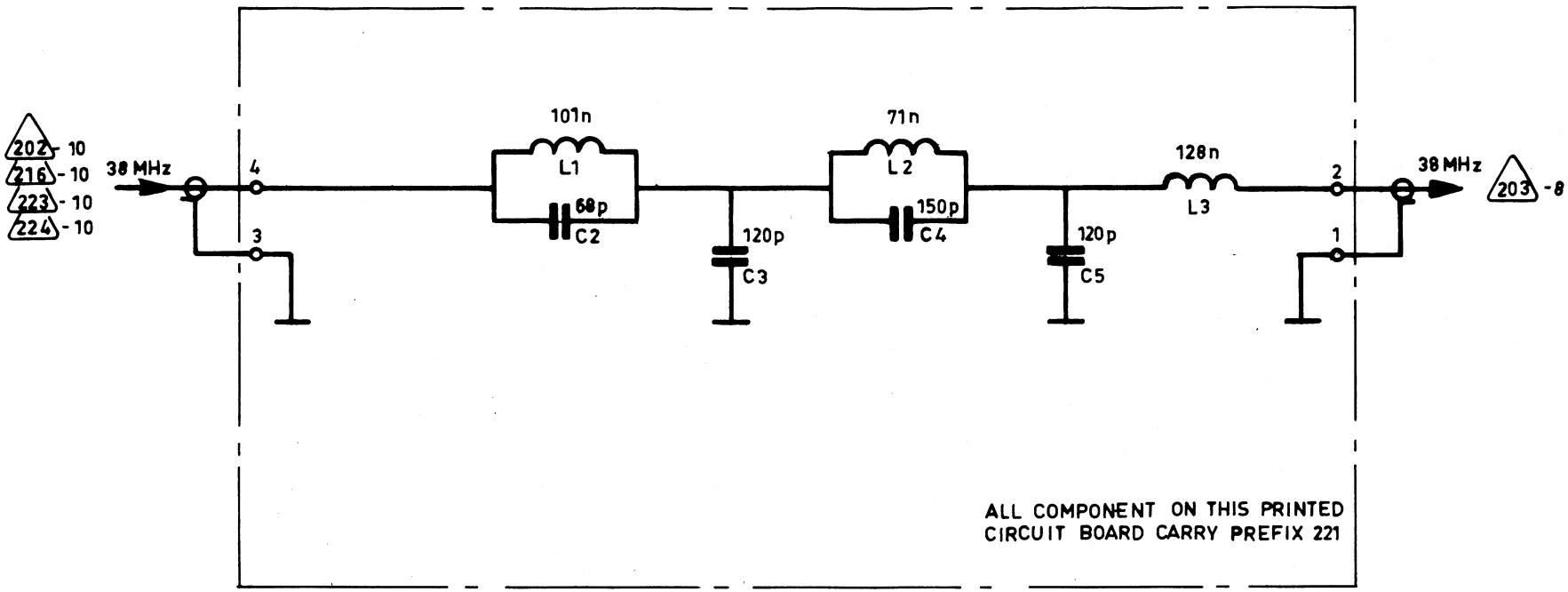

995 239 9 2

38 MHz FILTER 221

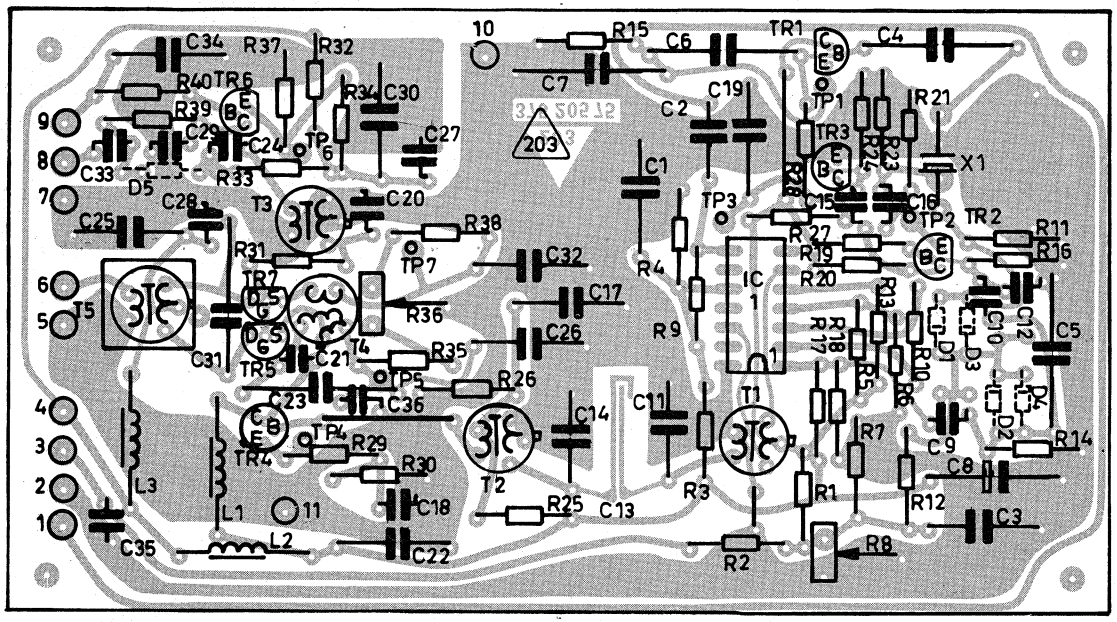

PRINTED CIRCUIT BOARD 203

VI D M PON SI

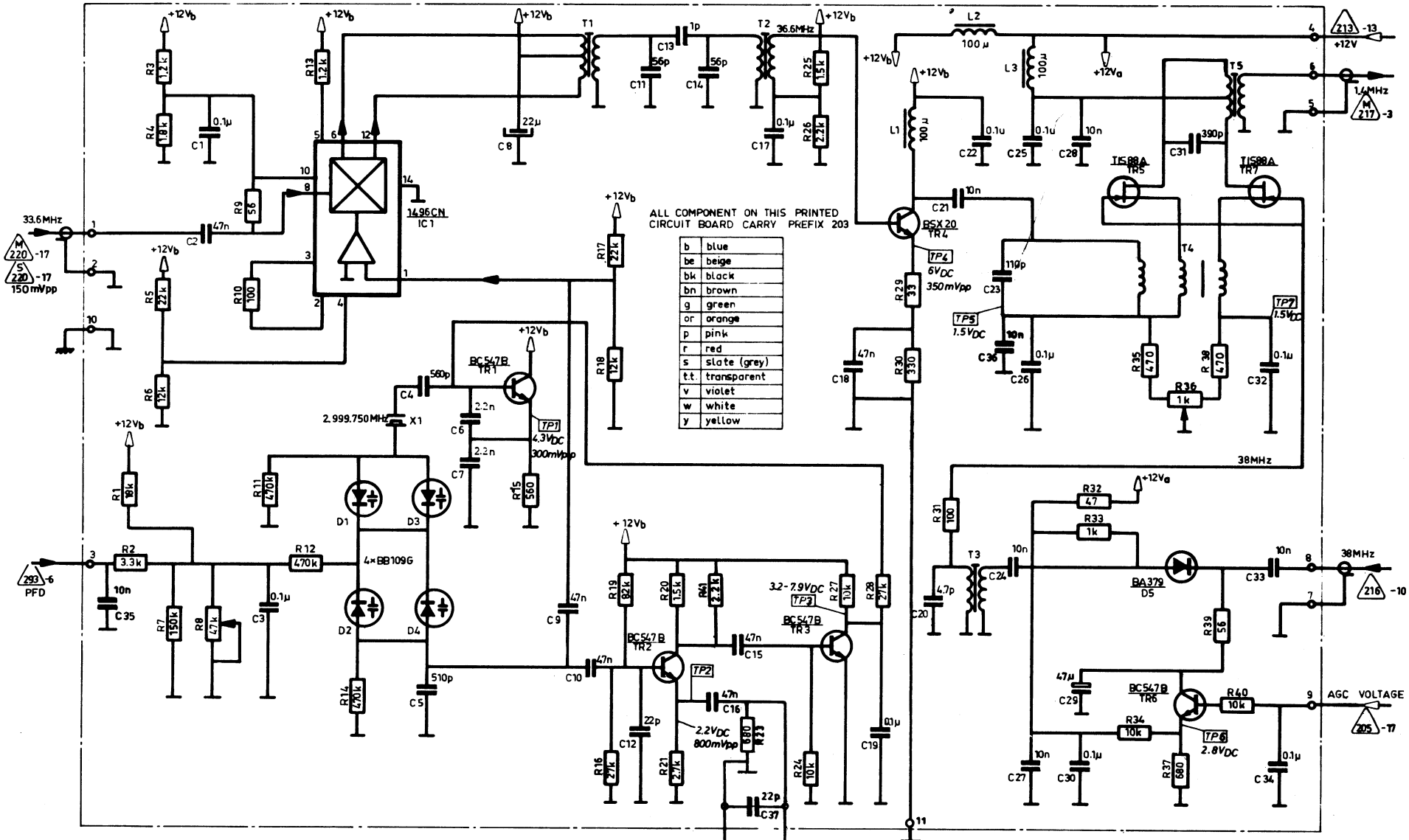

995 242 7 2

2 MIXER S 203

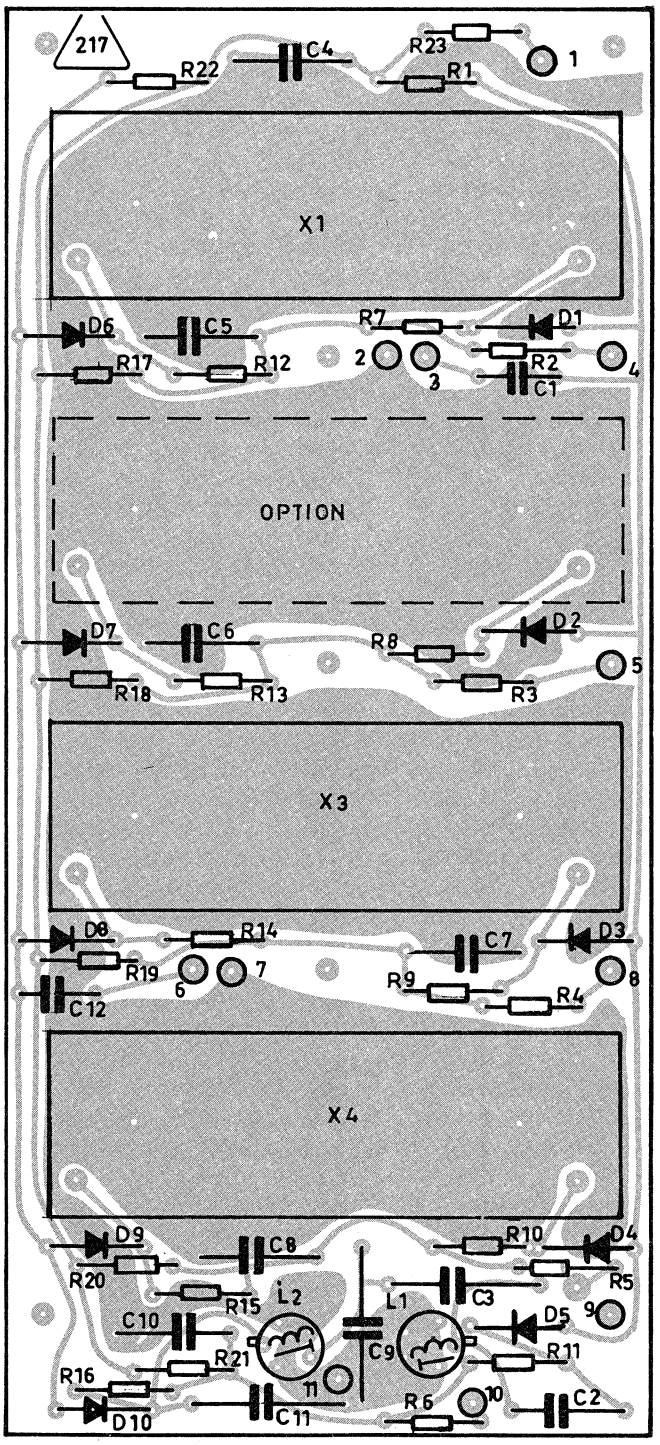

995 206 41

PRINTED CIRCUIT BOARD 217
VIEWED FROM COMPONENT SIDE

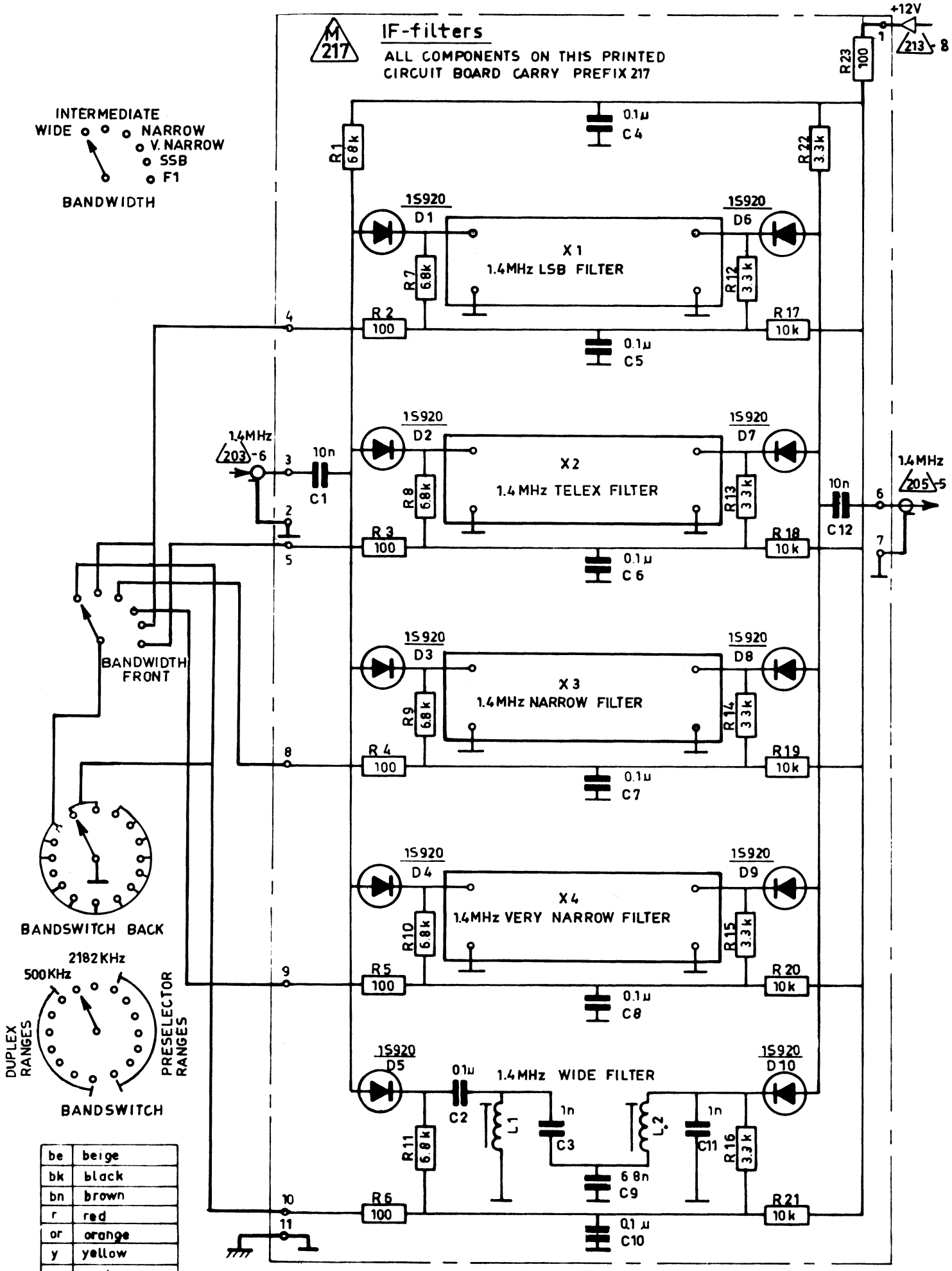

be	beige
bk	black
bn	brown
r	red
or	orange
y	yellow
p	pink
g	green
b	blue
v	violet
s	slate (grey)
w	white

995 242 81

IF FILTERS M 217

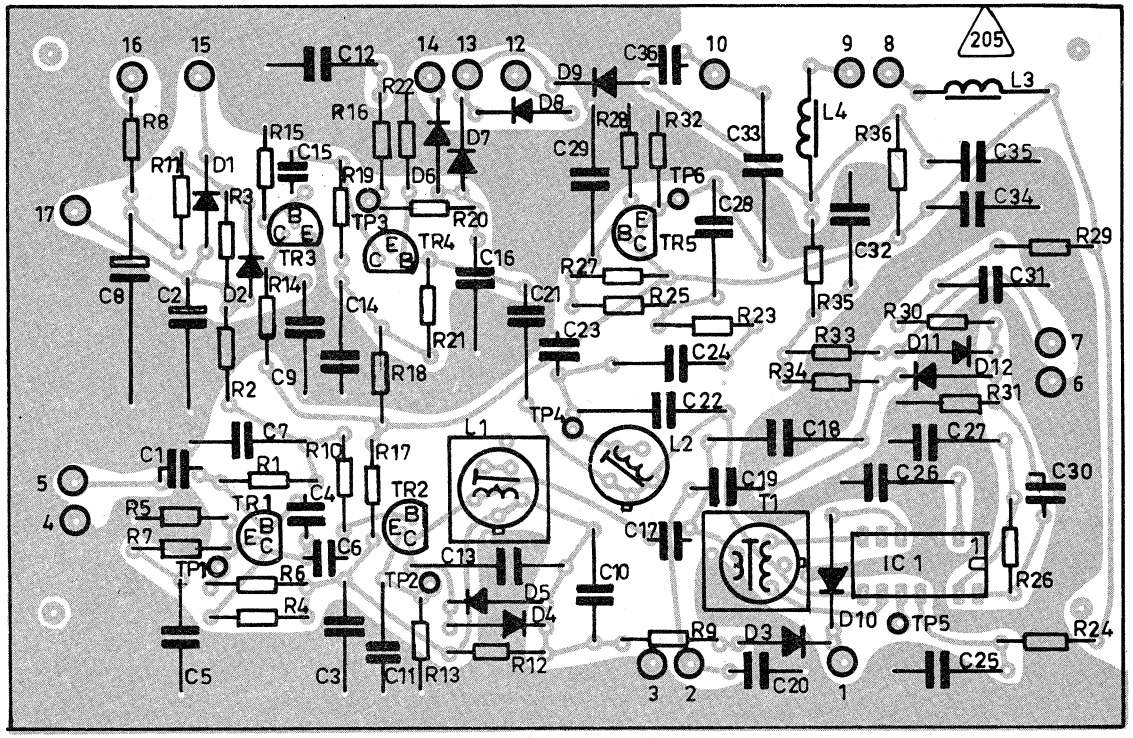

PRINTED CIRCUIT BOARD 205
VIEWED FROM COMPONENT SIDE

995 207 81

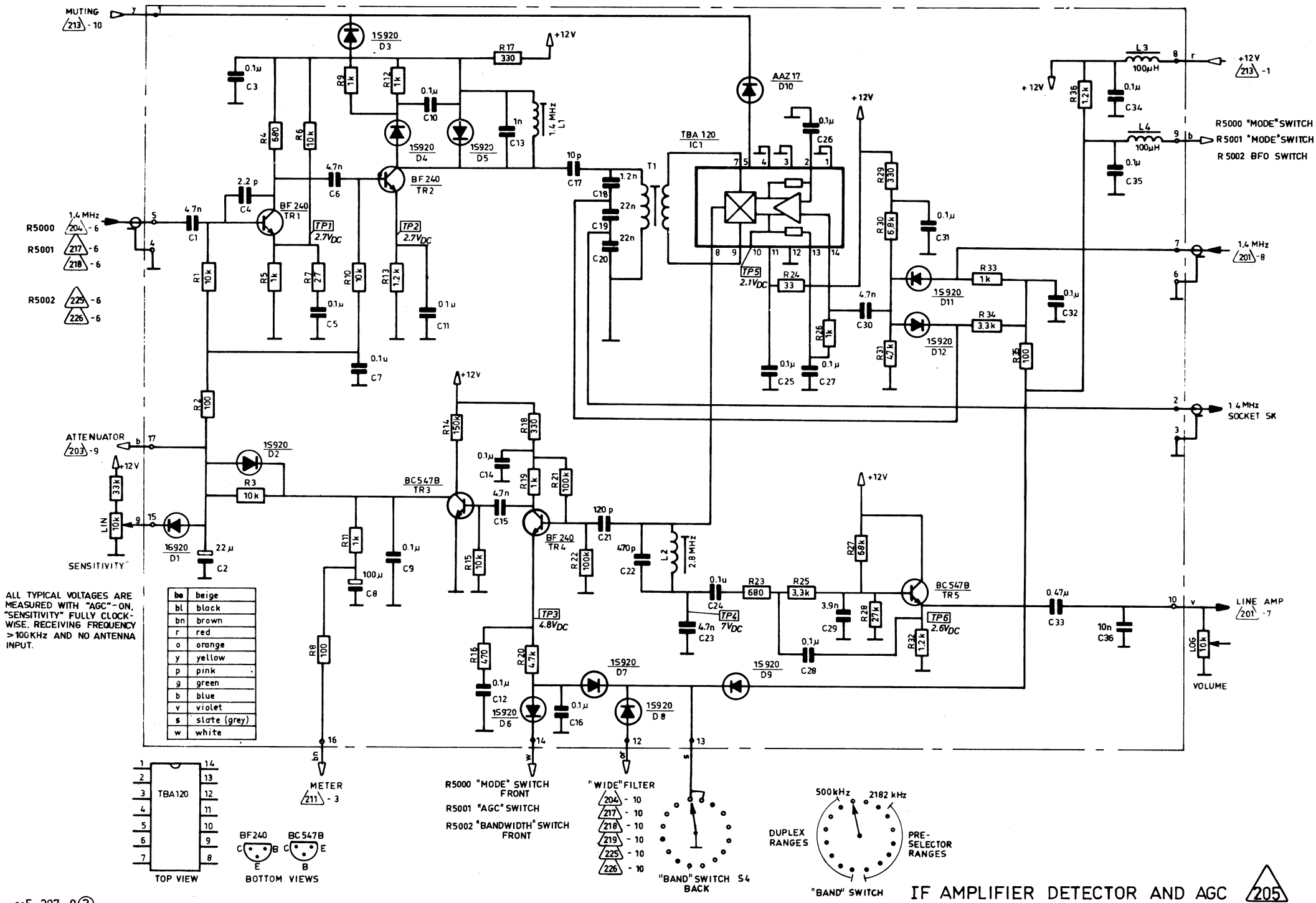

IF AMPLIFIER DETECTOR AND AGC 205

995 207 9 3

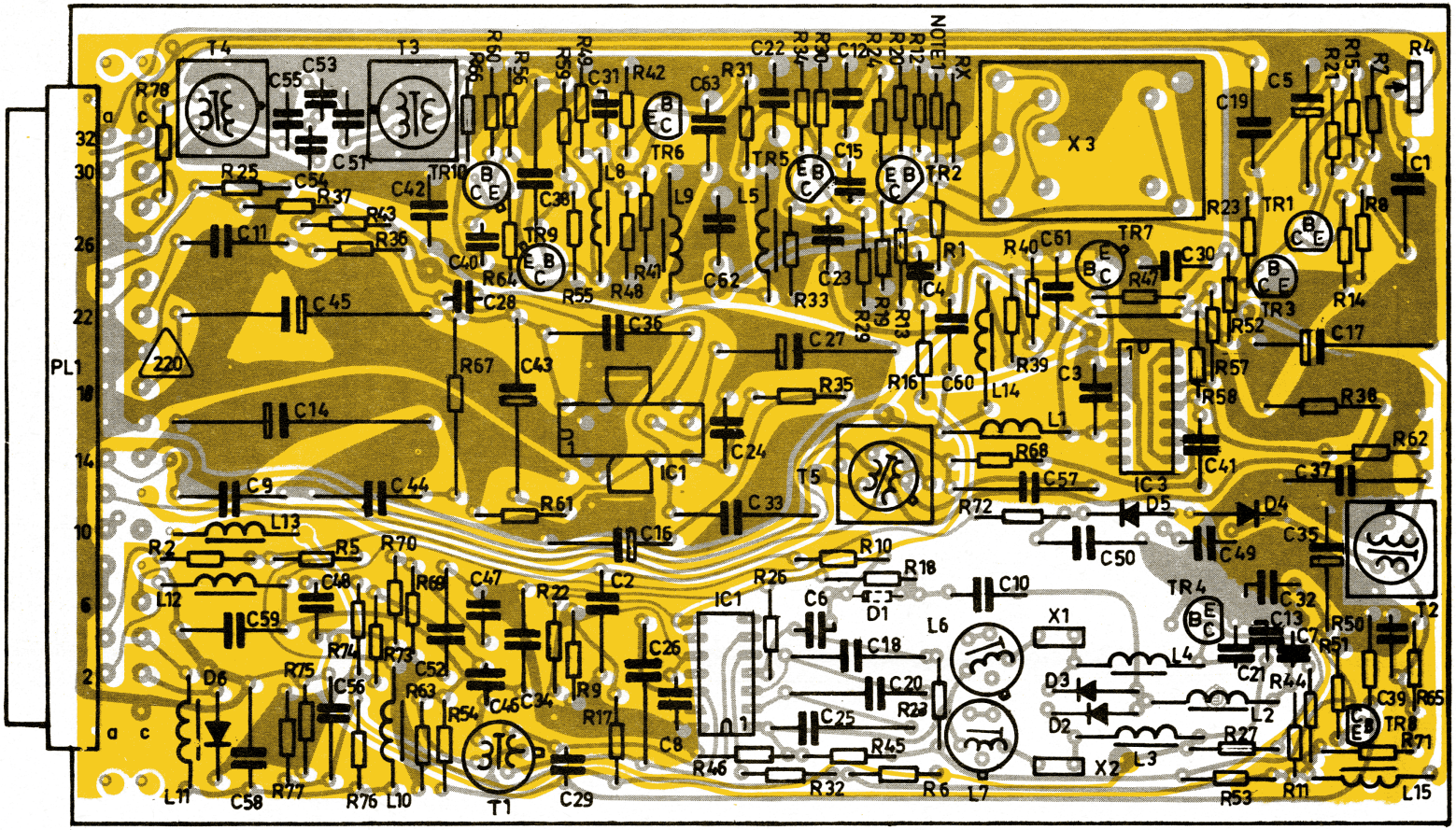

PRINTED CIRCUIT BOARD 220
VIEWED FROM COMPONENT SIDE

995 211 81

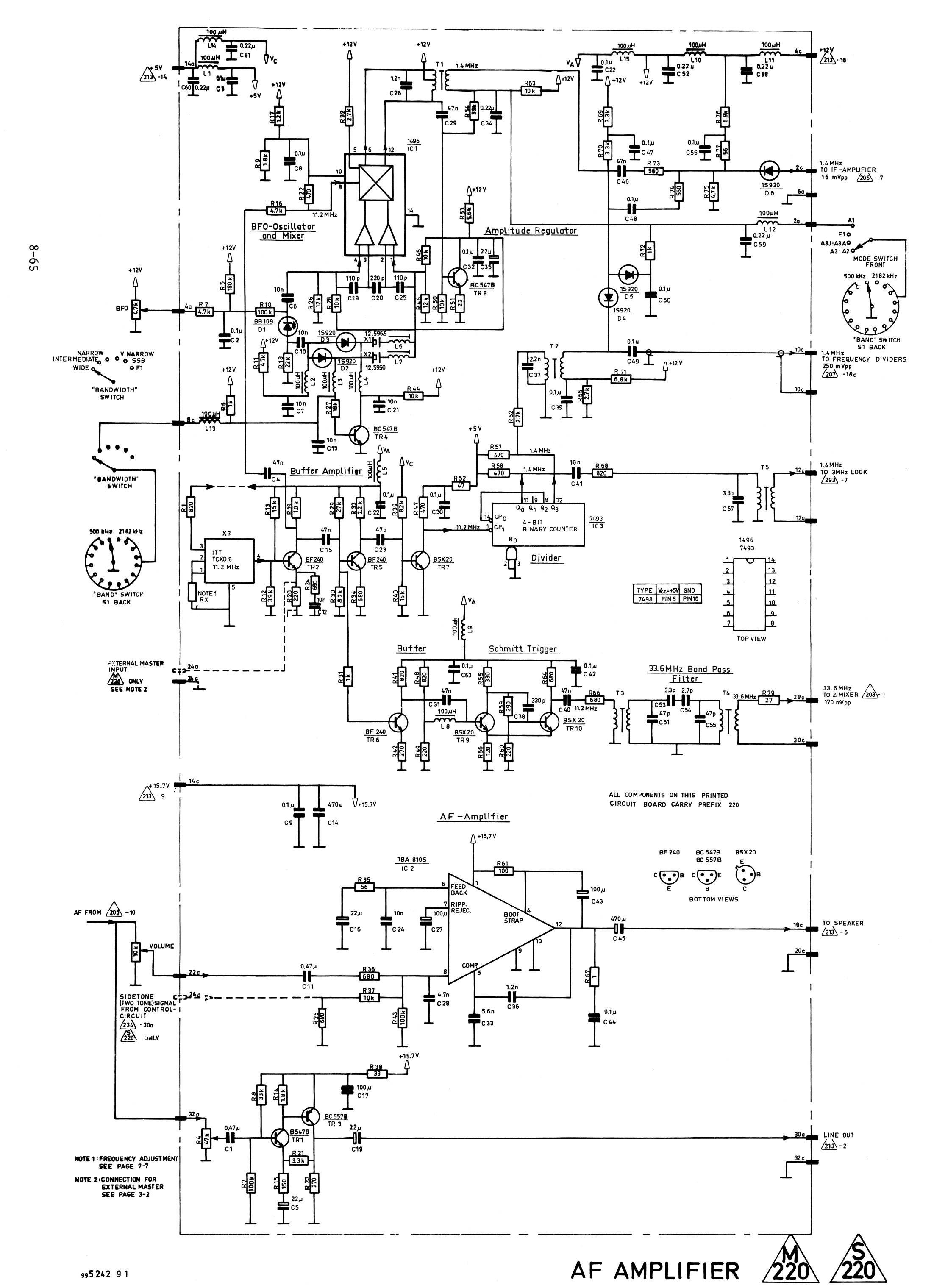

TYPE	V_{CC}=+5V	GND
7493	PIN 5	PIN 10

AF AMPLIFIER

M 220 S 220

995242 91

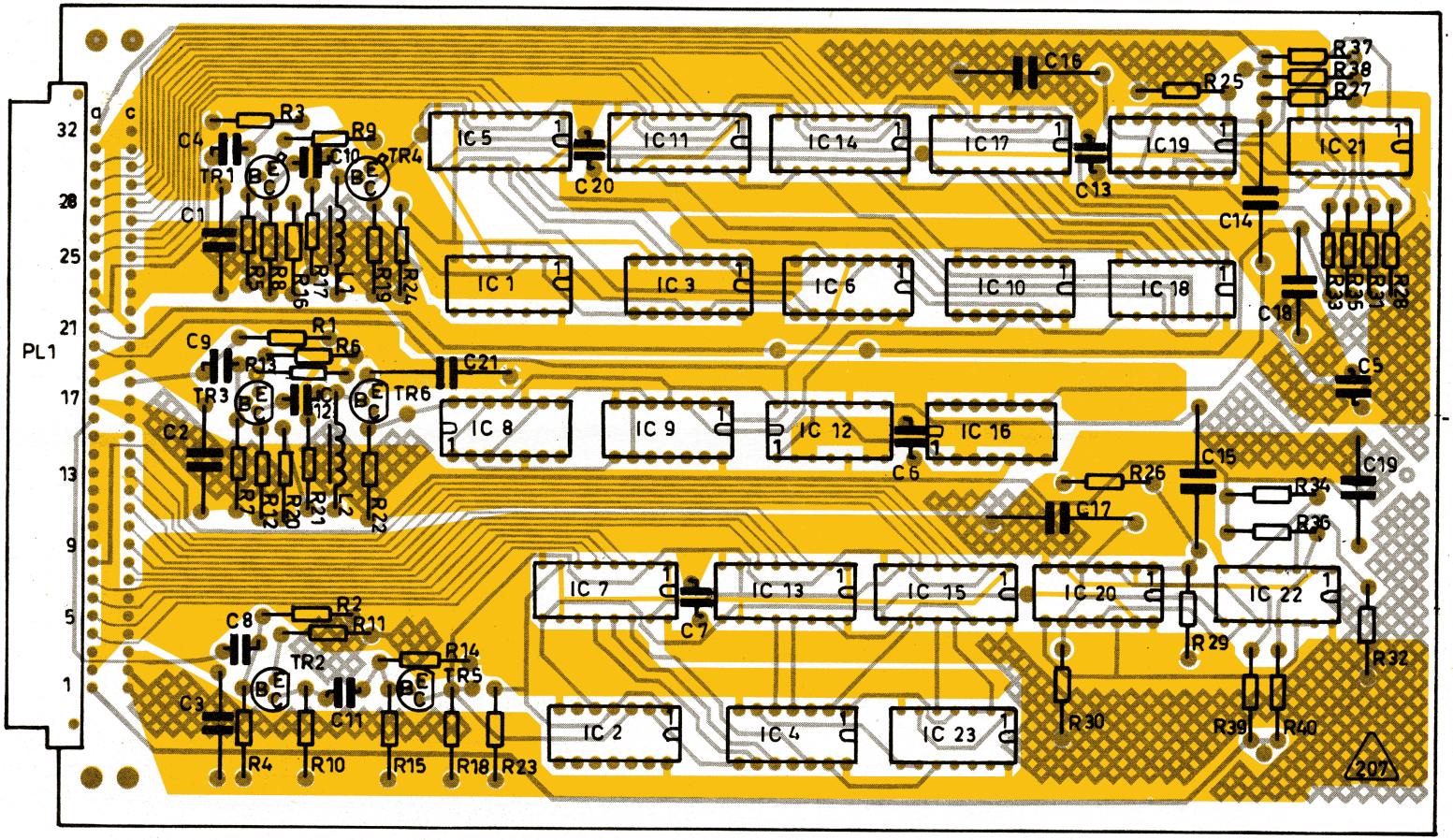

PRINTED CIRCUIT BOARD 207
VIEWED FROM COMPONENT SIDE

995 208 82

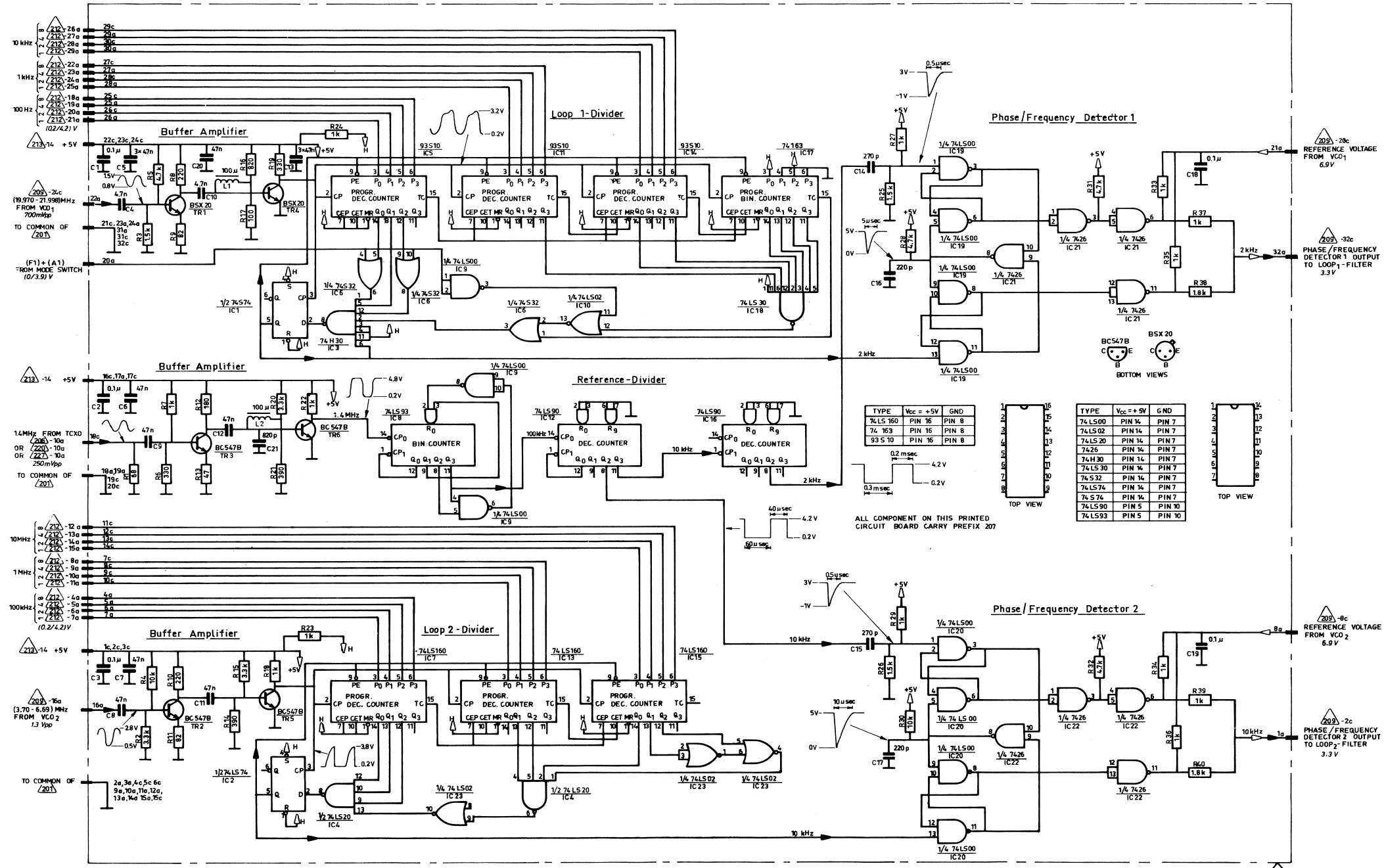

TYPE	Vcc = +5V	GND
74 LS 160	PIN 16	PIN 8
74 163	PIN 16	PIN 8
93 S 10	PIN 16	PIN 8

TYPE	Vcc = +5V	GND
74 LS00	PIN 14	PIN 7
74 LS02	PIN 14	PIN 7
74 LS20	PIN 14	PIN 7
7426	PIN 14	PIN 7
74 H 30	PIN 14	PIN 7
74 LS 30	PIN 14	PIN 7
74 S 32	PIN 14	PIN 7
74 LS74	PIN 14	PIN 7
74 S 74	PIN 14	PIN 7
74 LS90	PIN 5	PIN 10
74 LS93	PIN 5	PIN 10

995 208 9③

FREQUENCY DIVIDERS 207

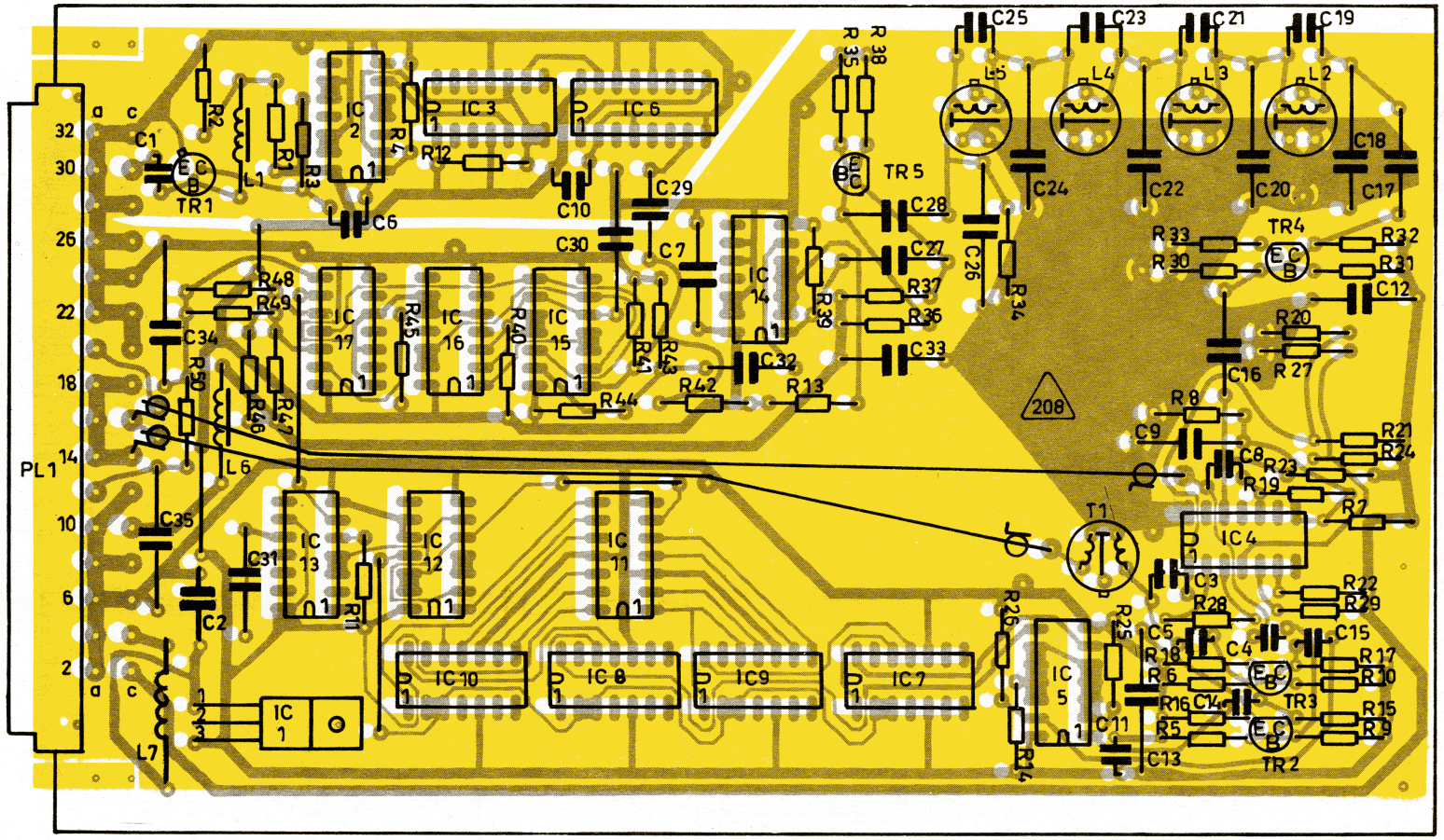

PRINTED CIRCUIT BOARD 208

VIEWED FROM COMPONENT SIDE

995 209 32

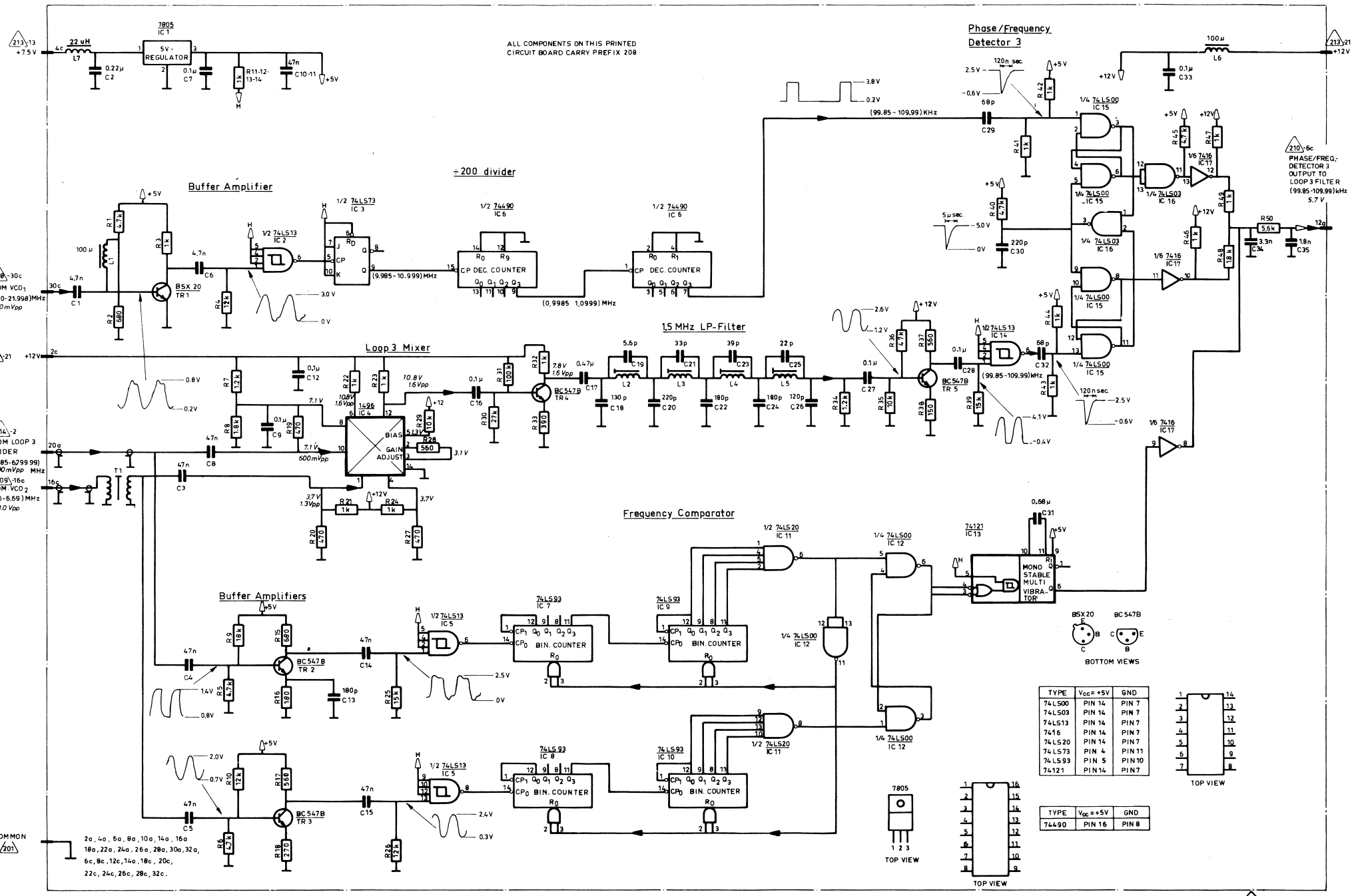

TYPE	Vcc = +5V	GND
74LS00	PIN 14	PIN 7
74LS03	PIN 14	PIN 7
74LS13	PIN 14	PIN 7
7416	PIN 14	PIN 7
74LS20	PIN 14	PIN 7
74LS73	PIN 4	PIN 11
74LS93	PIN 5	PIN 10
74121	PIN 14	PIN 7

TYPE	Vcc = +5V	GND
74490	PIN 16	PIN 8

995 209 4 (4)

LOOP TRANSLATOR 208

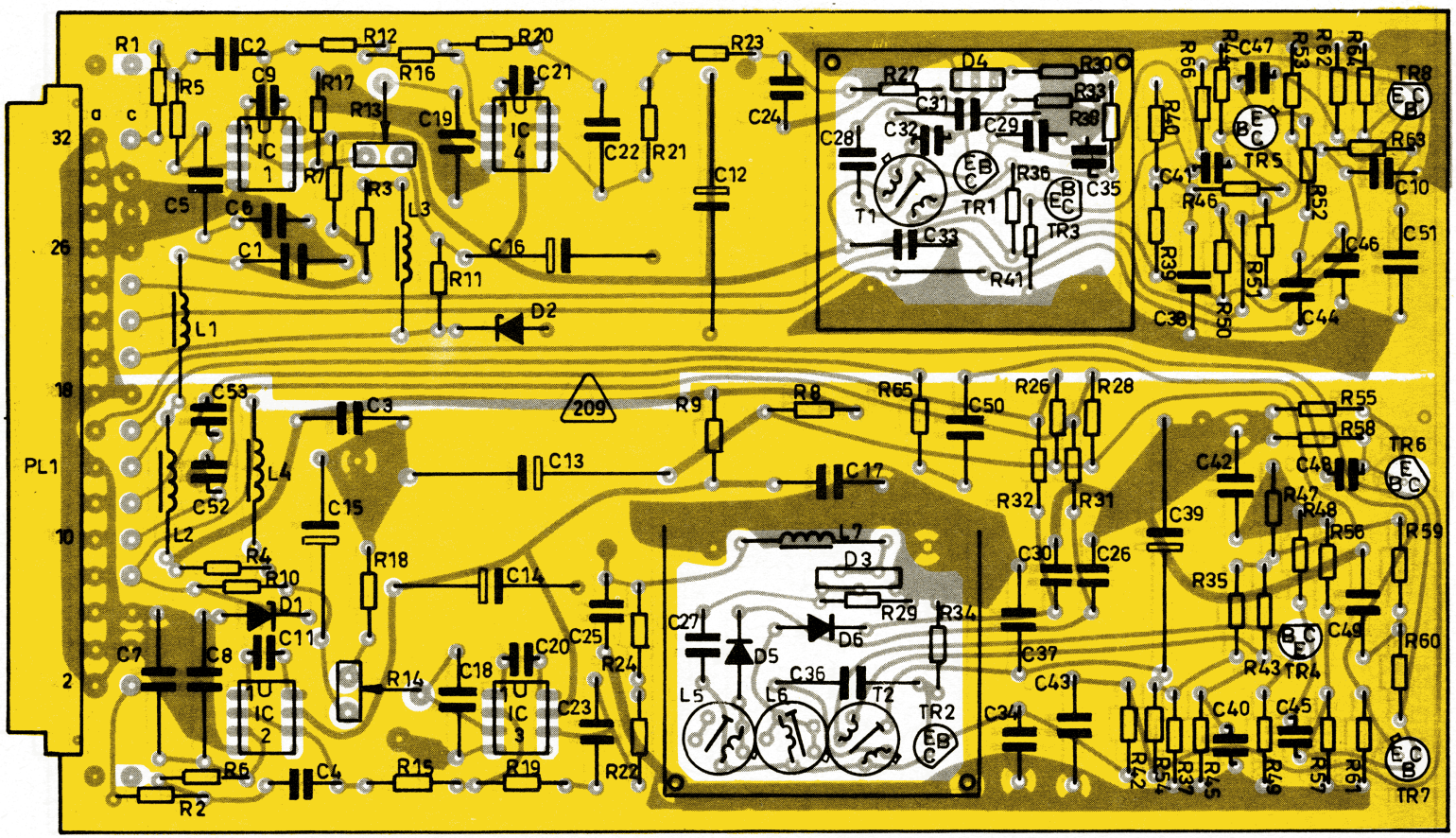

PRINTED CIRCUIT BOARD 209
VIEWED FROM COMPONENT SIDE

995 209 81

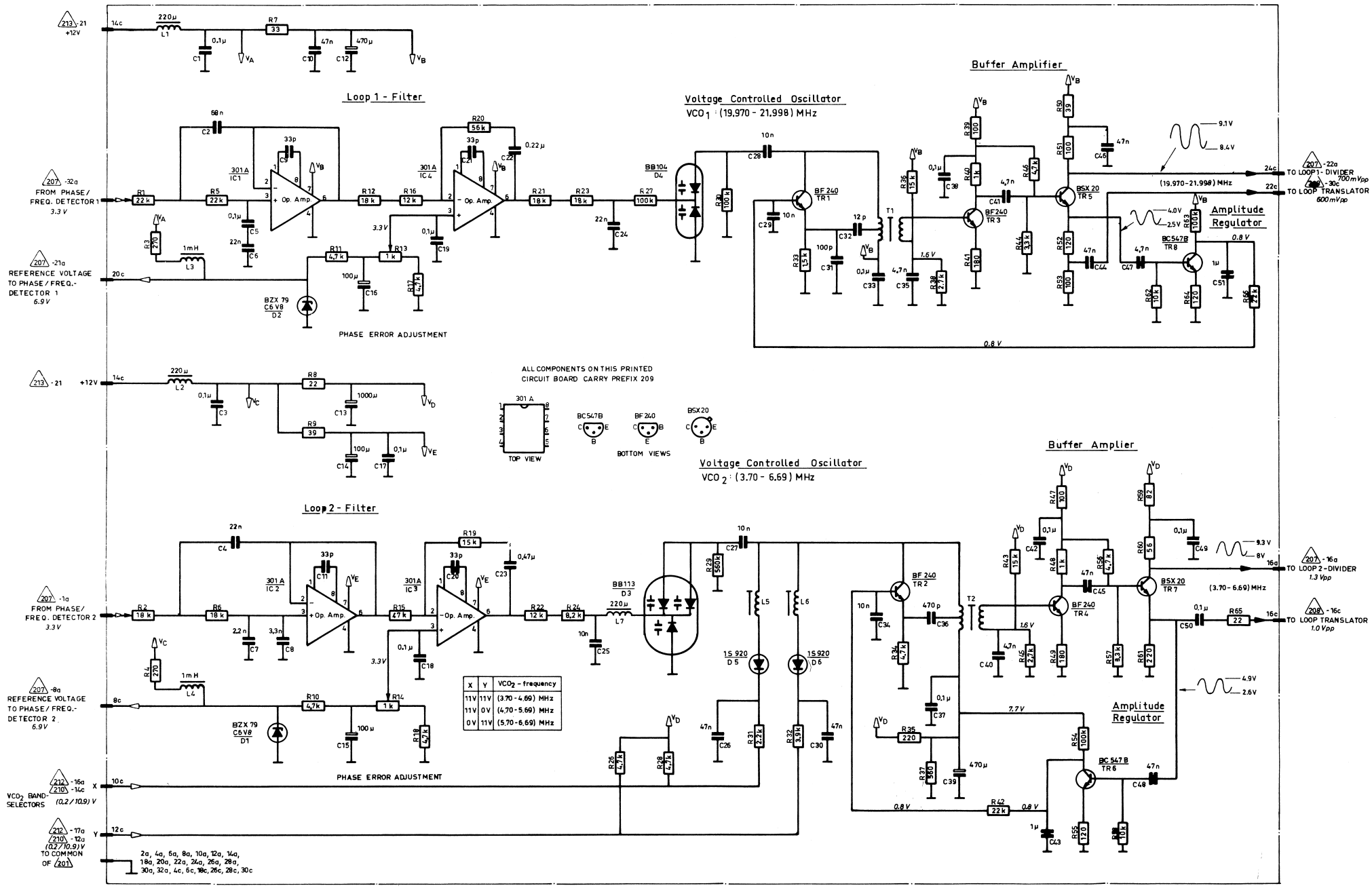

X	Y	VCO2 - frequency
11V	11V	(3.70 - 4.69) MHz
11V	0V	(4.70 - 5.69) MHz
0V	11V	(5.70 - 6.69) MHz

995 209 9(2)

VCO1 and VCO2 209

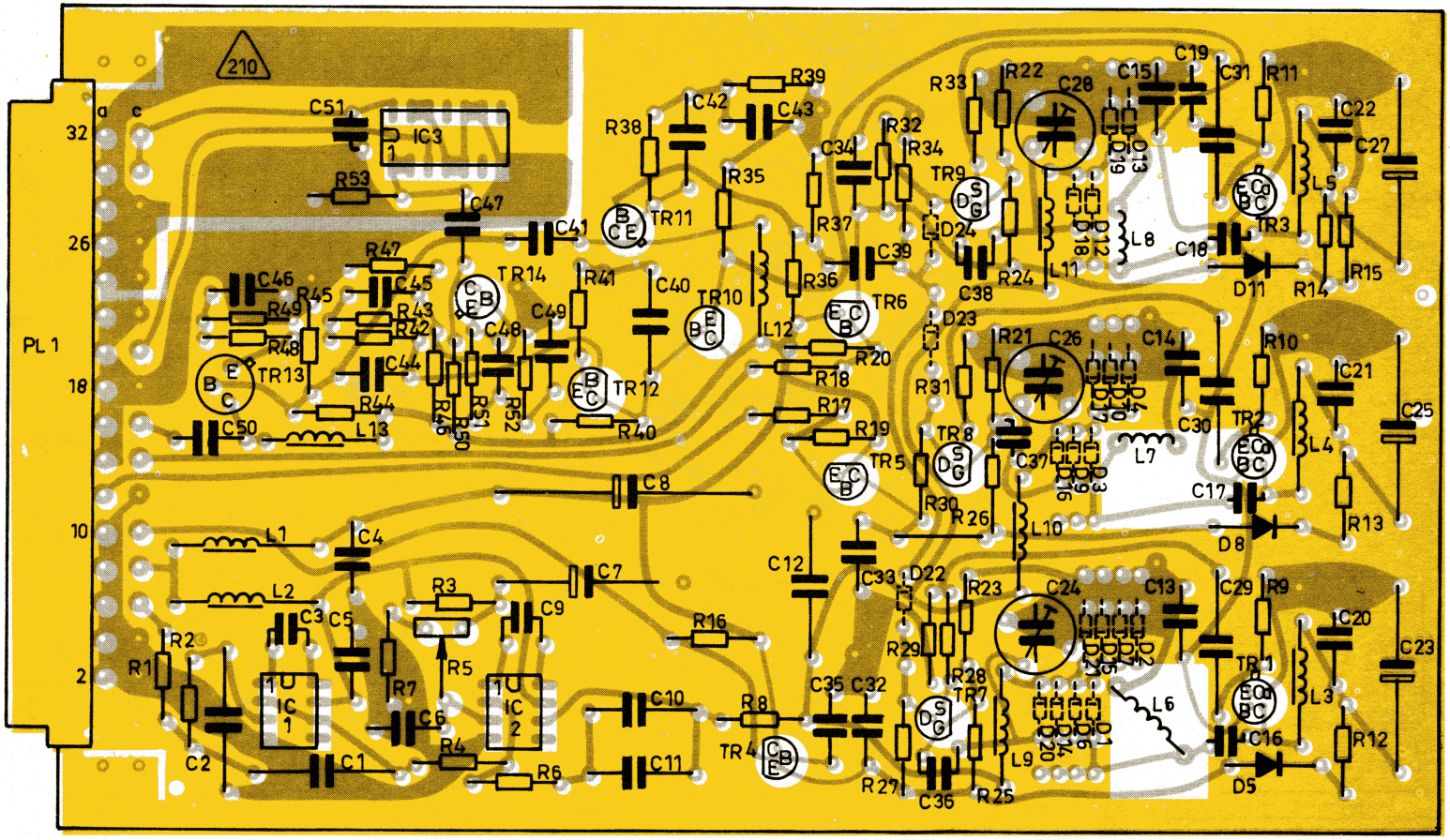

PRINTED CIRCUIT BOARD 210
VIEWED FROM COMPONENT SIDE

995 210 31

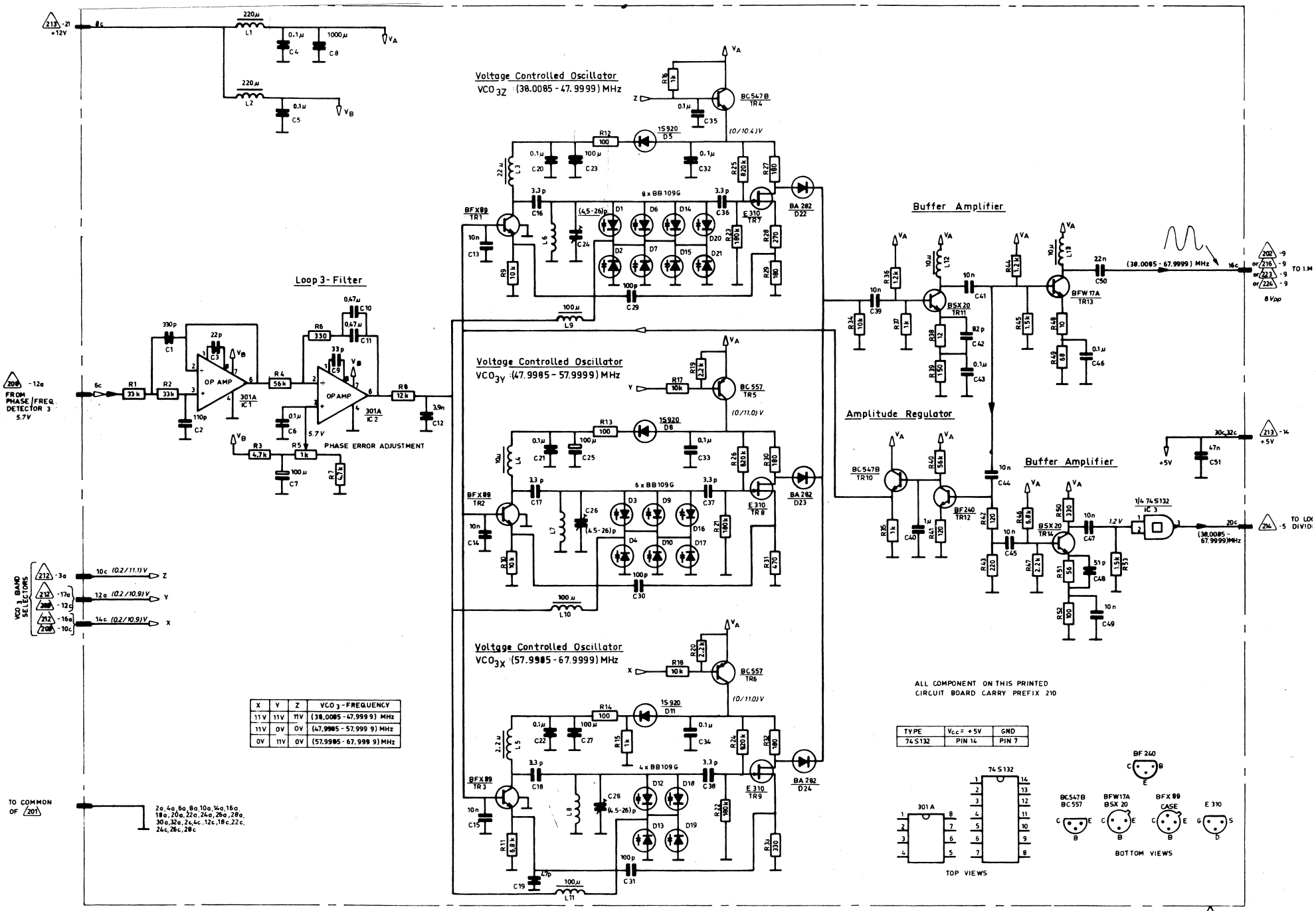

X	Y	Z	VCO 3 - FREQUENCY
11 V	11 V	11 V	(38.0085 - 47.999 9) MHz
11 V	0 V	0 V	(47.9985 - 57.999 9) MHz
0 V	11 V	0 V	(57.9985 - 67.999 9) MHz

TYPE	Vcc = +5V	GND
74 S 132	PIN 14	PIN 7

VCO3 210

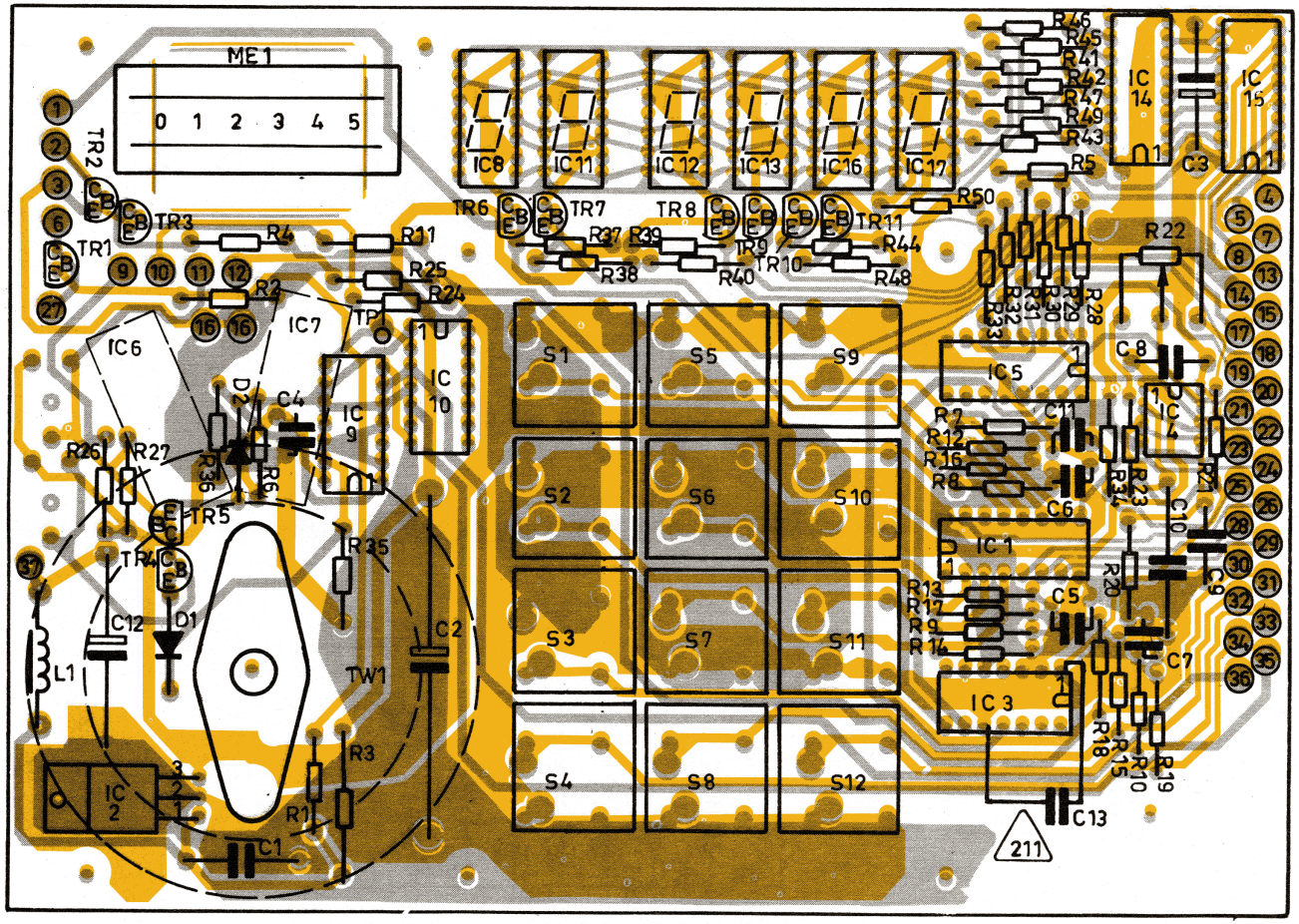

PRINTED CIRCUIT BOARD 211
VIEWED FROM COMPONENT SIDE

995 210 82

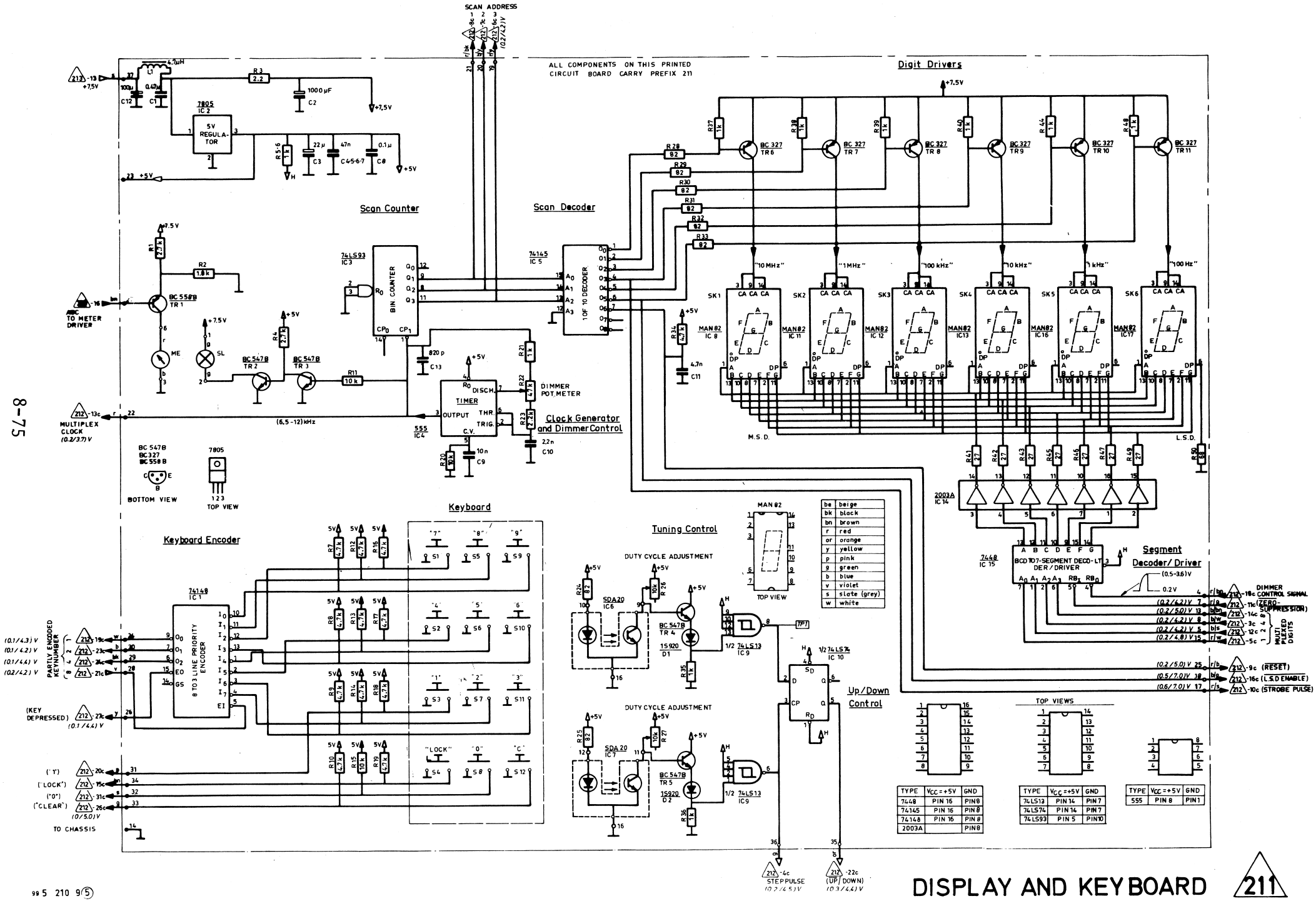

be	beige
bk	black
bn	brown
r	red
or	orange
y	yellow
p	pink
g	green
b	blue
v	violet
s	slate (grey)
w	white

TYPE	V_{CC} = +5V	GND
7448	PIN 16	PIN 8
74145	PIN 16	PIN 8
74148	PIN 16	PIN 8
2003A		PIN 8

TYPE	V_{CC} = +5V	GND
74LS13	PIN 14	PIN 7
74LS74	PIN 14	PIN 7
74LS93	PIN 5	PIN 10

TYPE	V_{CC} = +5V	GND
555	PIN 8	PIN 1

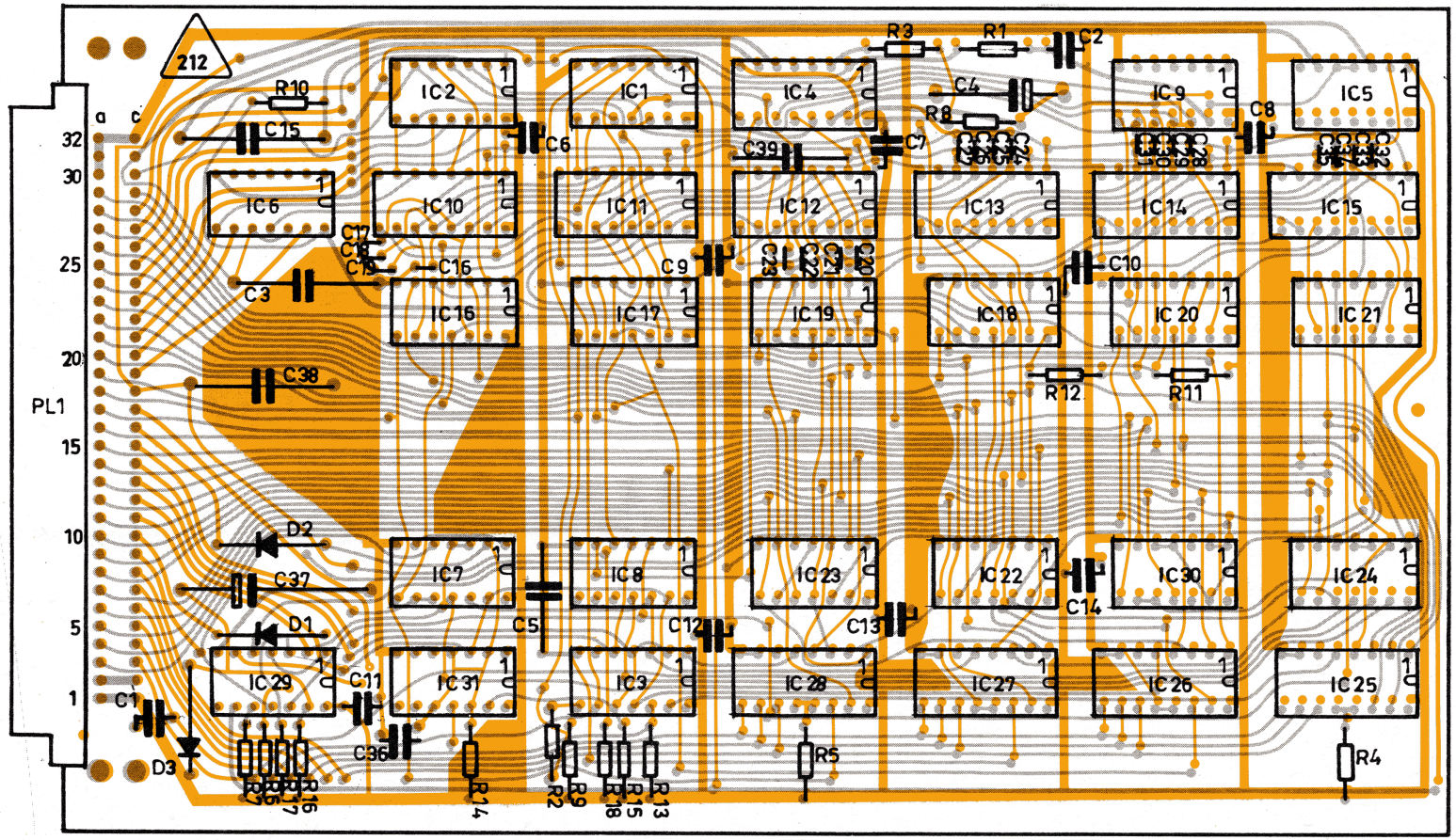

PRINTED CIRCUIT BOARD 212
VIEWED FROM COMPONENT SIDE

995 211 33

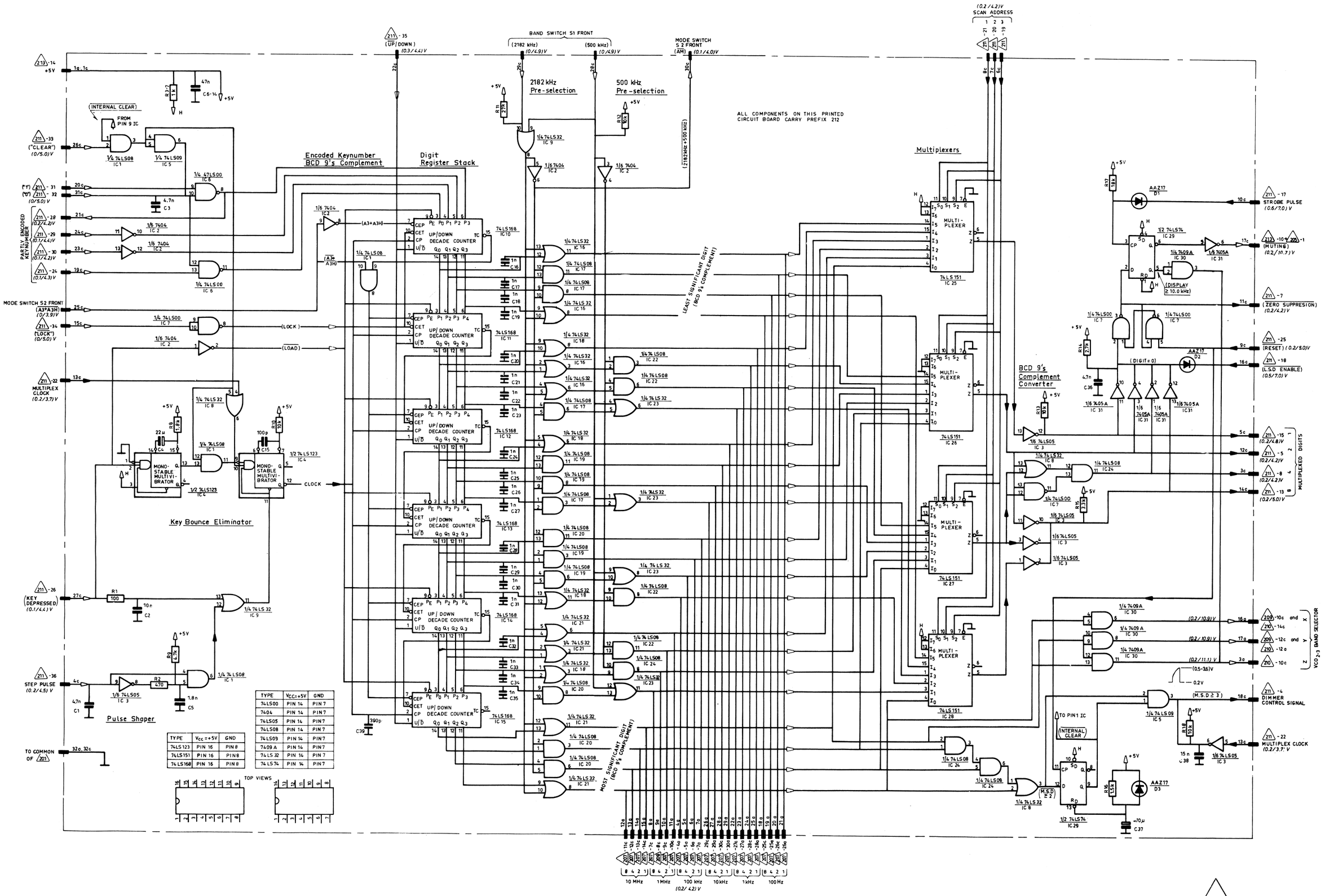

TYPE	V_{CC}=+5V	GND
74LS123	PIN 16	PIN 8
74LS151	PIN 16	PIN 8
74LS168	PIN 16	PIN 8

TYPE	V_{CC}=+5V	GND
74LS00	PIN 14	PIN 7
7404	PIN 14	PIN 7
74LS05	PIN 14	PIN 7
74LS08	PIN 14	PIN 7
74LS09	PIN 14	PIN 7
7409 A	PIN 14	PIN 7
74LS32	PIN 14	PIN 7
74LS74	PIN 14	PIN 7

TOP VIEWS

995 211 4

SYNTHESIZER CONTROL

212

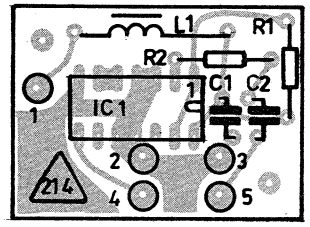

995 226 72

PRINTED CIRCUIT BOARD 214
VIEWED FROM COMPONENT SIDE

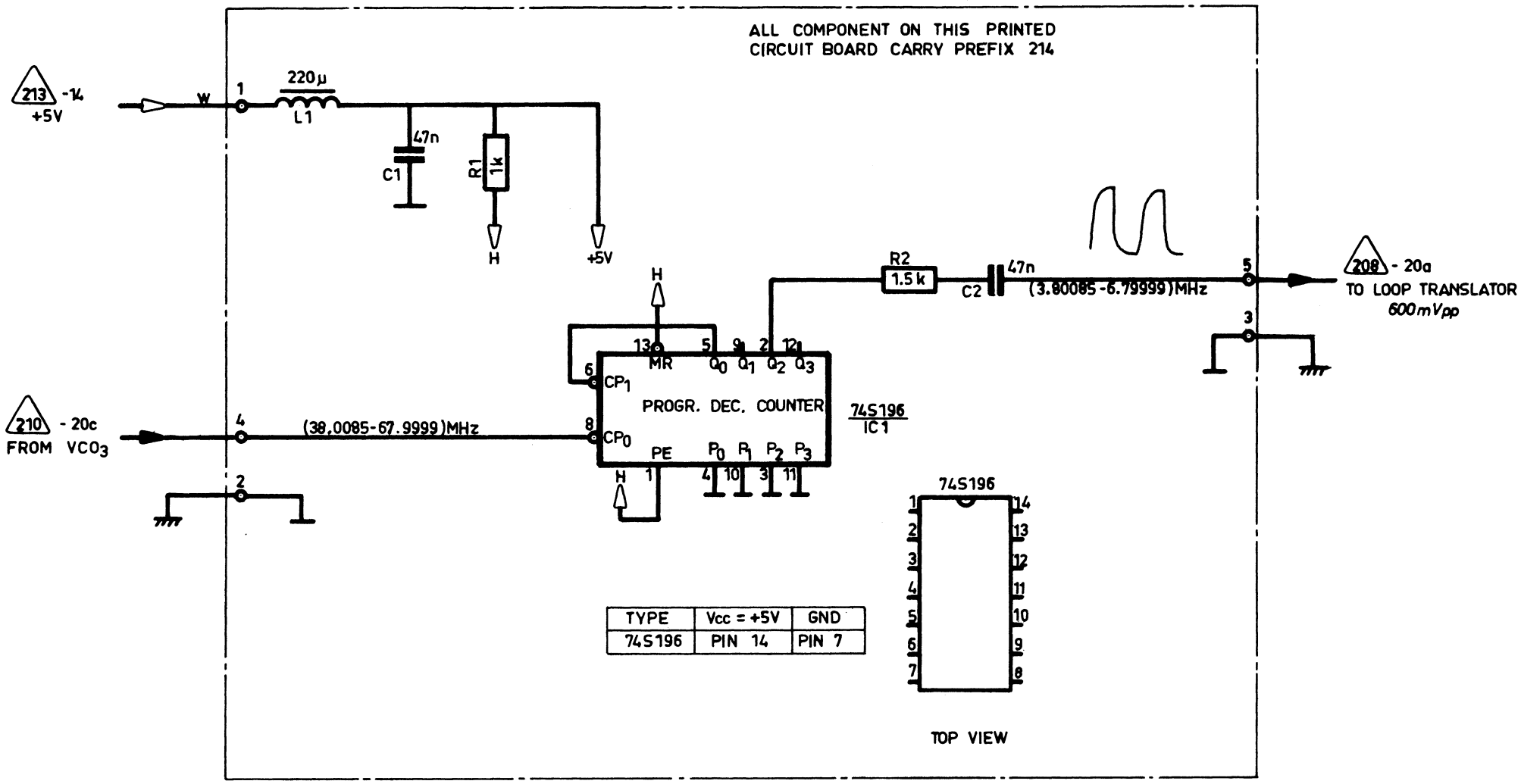

TYPE	Vcc = +5V	GND
74S196	PIN 14	PIN 7

995 226 8③

LOOP 3 - DIVIDER 214

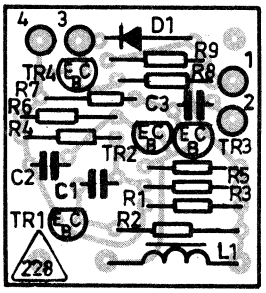

995 227 31

PRINTED CIRCUIT BOARD 228
VIEWED FROM COMPONENT SIDE

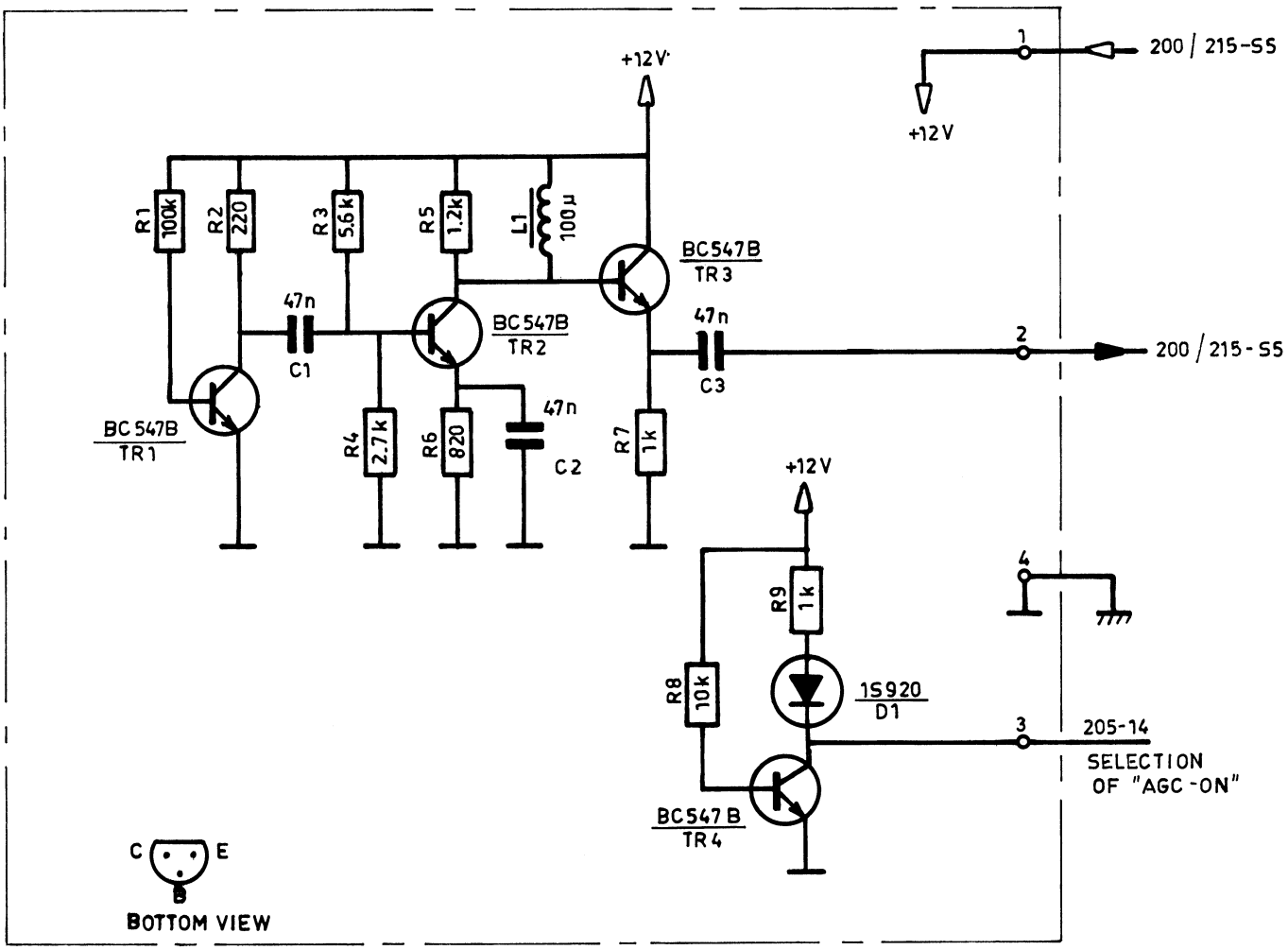

995 227 5 1

NOISE GENERATOR 228

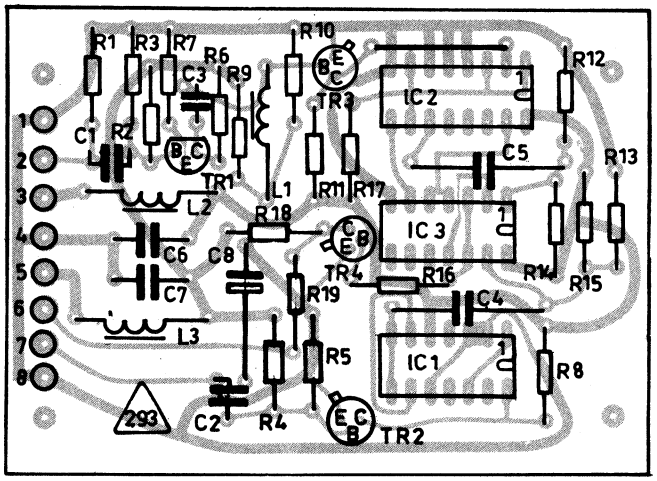

995 234 82

PRINTED CIRCUIT BOARD 293
VIEWED FROM COMPONENT SIDE

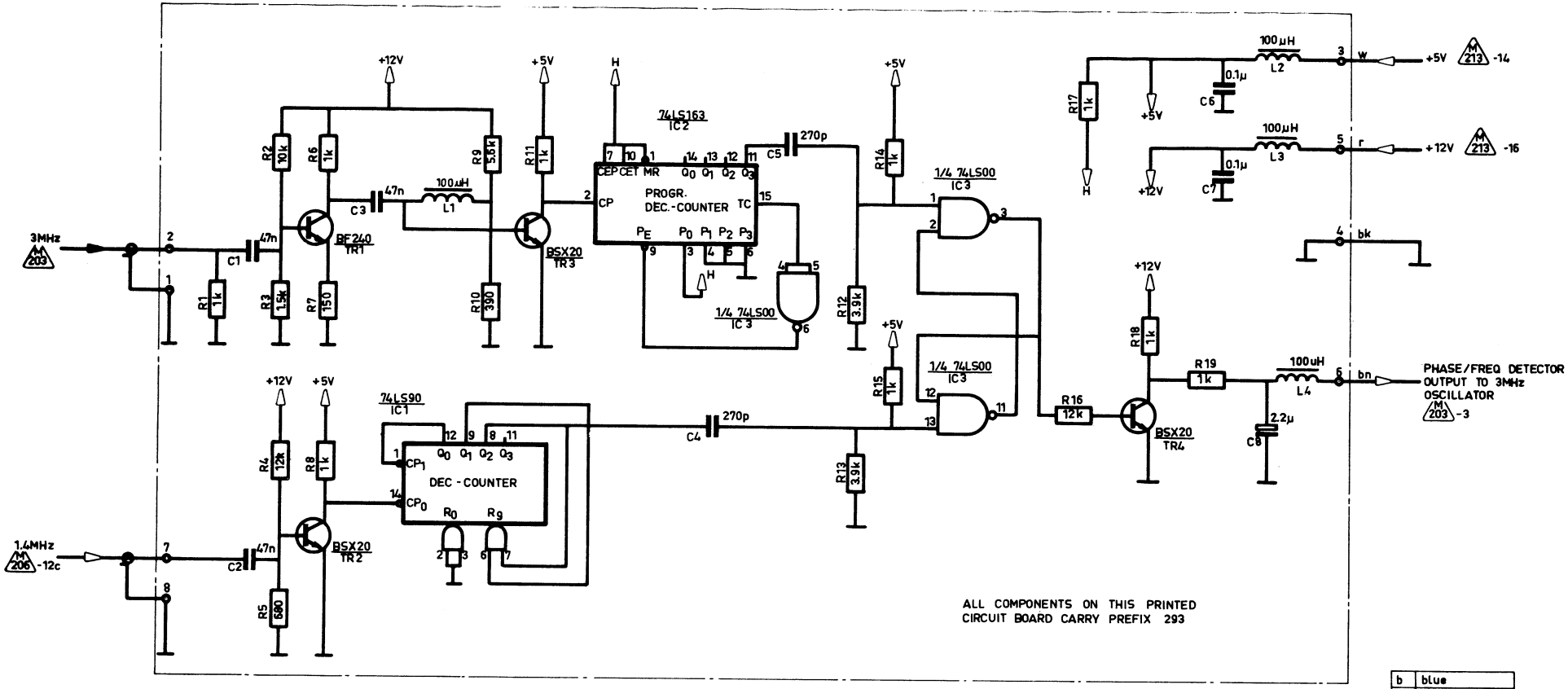

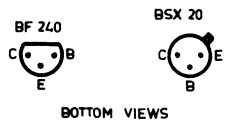

BOTTOM VIEWS

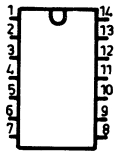

TOP VIEW

TYPE	Vcc = + 5V	GND
74LS00	PIN 14	PIN 7
74LS90	PIN 5	PIN 10

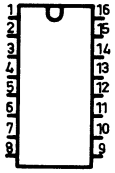

TOP VIEW

TYPE	Vcc = +5V	GND
74LS163	PIN 16	PIN 8

b	blue
be	beige
bk	black
bn	brown
g	green
or	orange
p	pink
r	red
s	slate
tt	transparent
v	violet
w	white
y	yellow

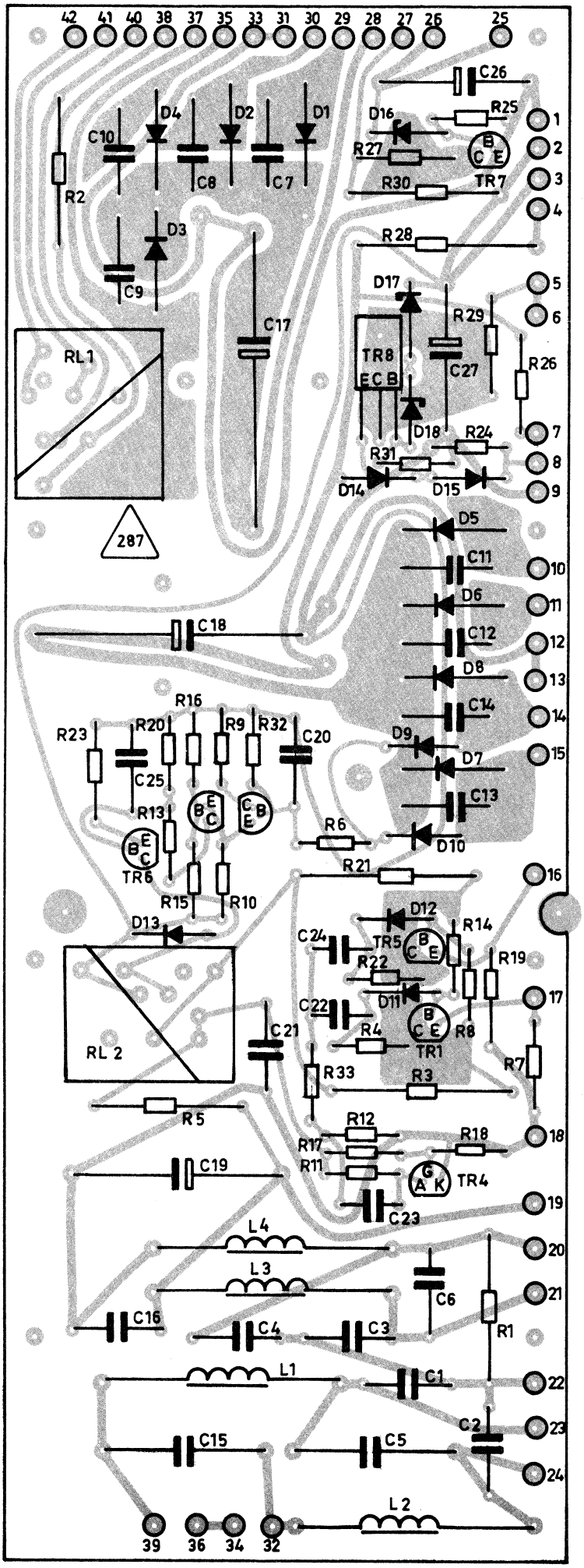

PRINTED CIRCUIT BOARD 287
VIEWED FROM COMPONENT SIDE

994 207 32

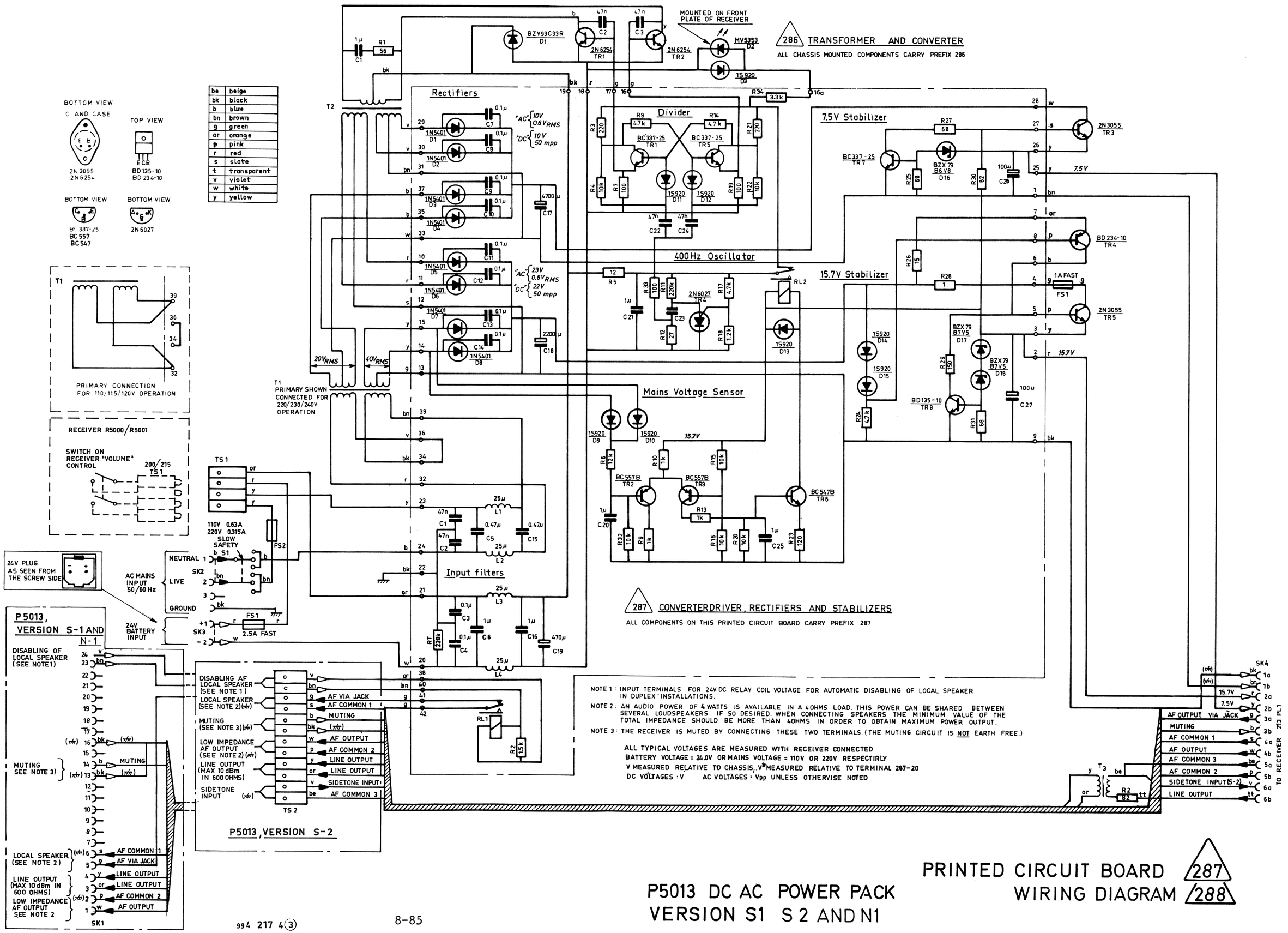

be	beige
bk	black
b	blue
bn	brown
g	green
or	orange
p	pink
r	red
s	slate
t	transparent
v	violet
w	white
y	yellow

PRINTED CIRCUIT BOARD 287
WIRING DIAGRAM 288

P5013 DC AC POWER PACK
VERSION S1 S2 AND N1