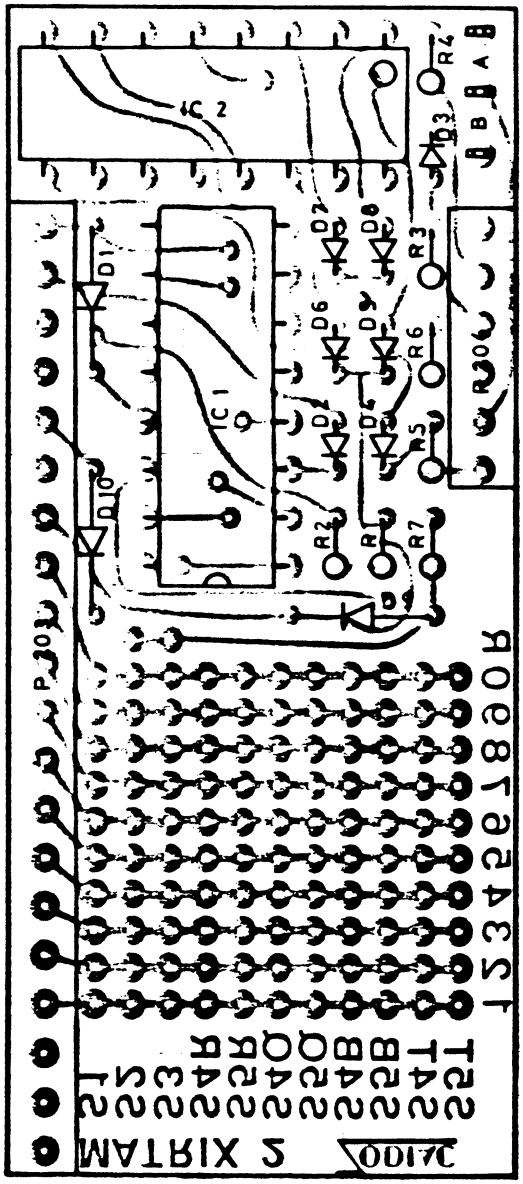

Constr.	Drawn W.S.	Copied	Chkd	Stand.	Appr.	Scale M 2,5:1	Repl.	Repl. by
ZODIAC®	Bestückungsplan Calibri Matrix 2							Date 24.6.76

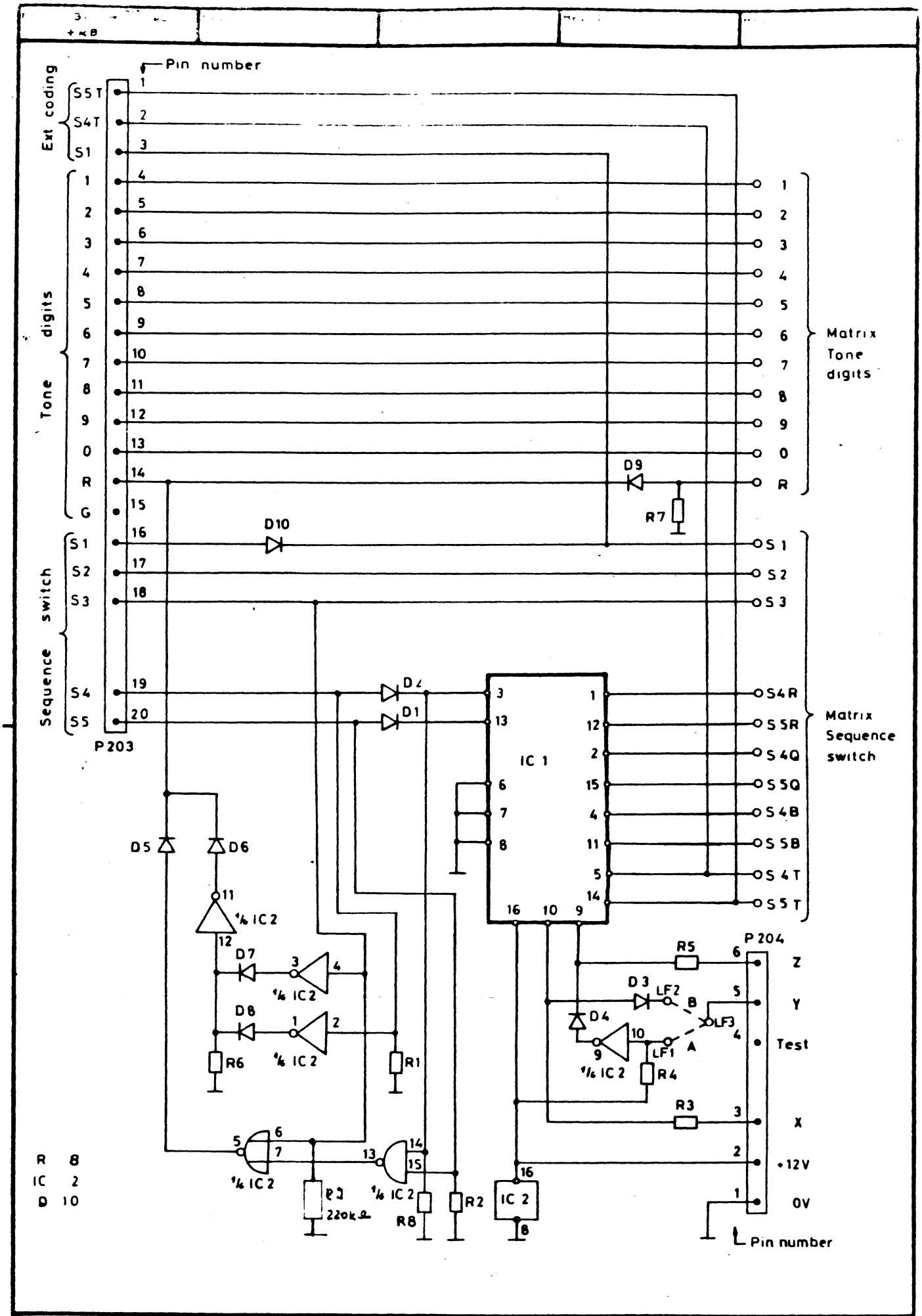

Constr.	Drawn	Copied	Chkd	Stand.	Appr	Scale	Repl.	Repl. by
	W. S.							

ZODIAC®

Schematic diagram
Colibri Matrix 2

Date 1976-04-2

Draw no. Z-4060-411 a)

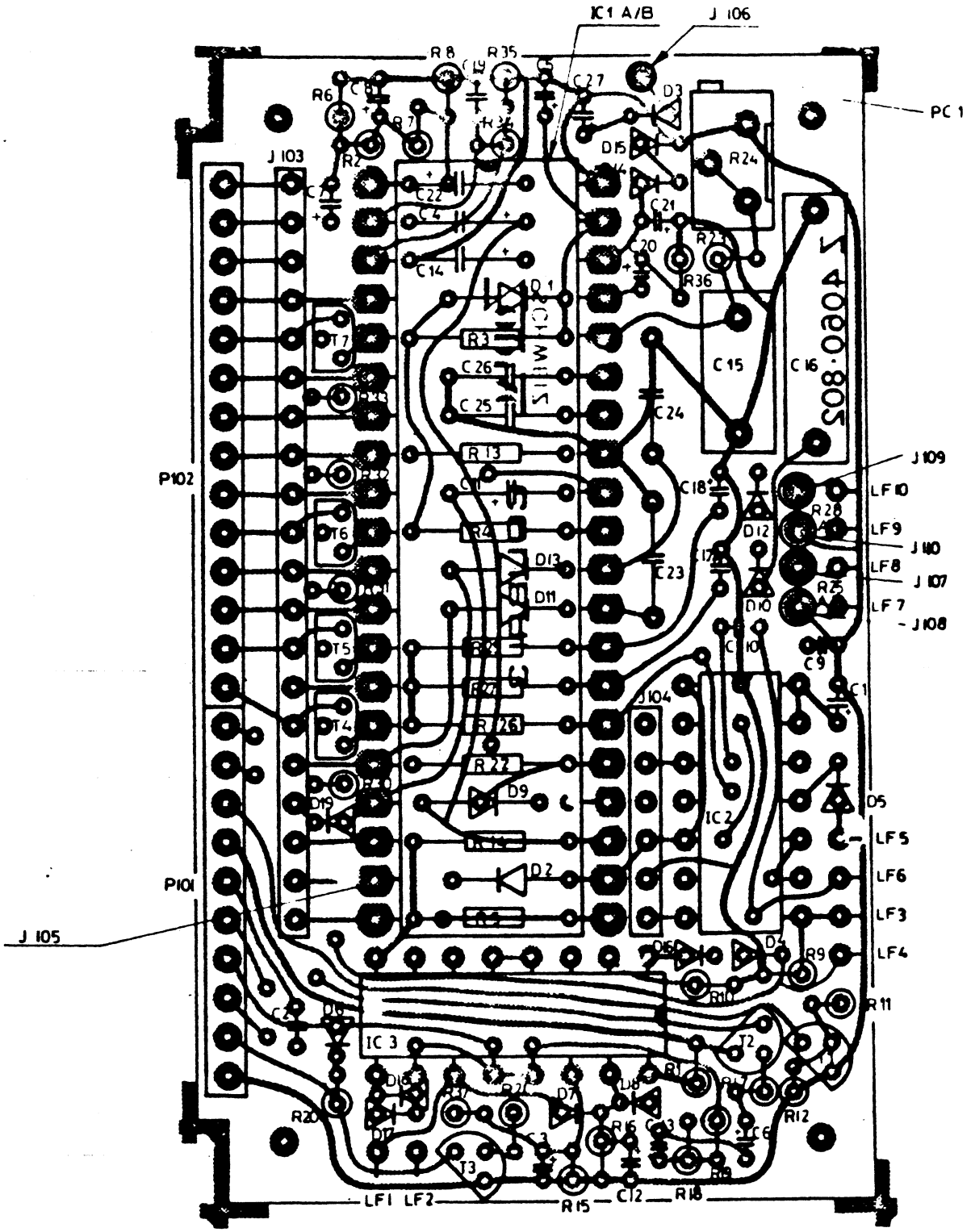

Constr.	Drawn	Copied	Chkd	Stand	Appr	Scale	Repl.	Repl. by
	I.E					2,5:1		

ZODIAC®
Funksprechgeräte AG KERNS Schweiz

COLIBRI 3
Bestückungsplan

Date 26. 7. 77

Draw. no Z 4060-712

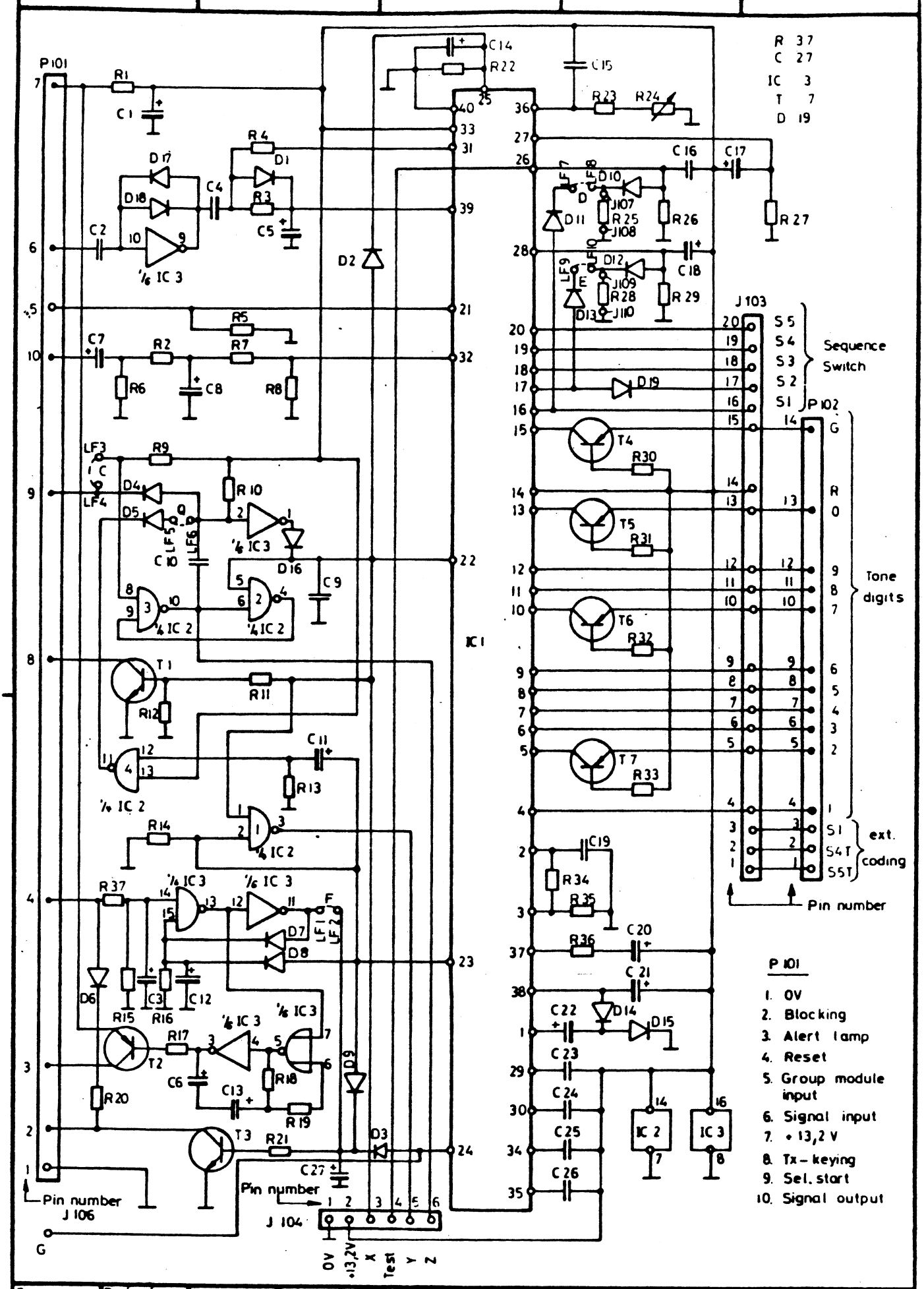

Constr.	Drawn	Copied	Chkd	Stand	Appr.	Scale %	Repl.	Repl. by
	J.E							

ZODIAC®
Funksprechgeräte AG, KERNS Schweiz

COLIBRI 3
Schematic diagram

Date 20.7.77

Draw. no. Z 4060-402

ZODIAC Five Tone Selective Call System COLIBRI 3

1. DESCRIPTION

The Colibri 3 is a five tone sequential decoder/encoder, which has been designed for use in selective call systems employing the international CCIR or ZVEI standards. It incorporates tone filters and tone generators using MOS/LSI circuitry, and is pre-programmed to eleven tone frequencies as specified in the international standards. A twelfth frequency is included, which, in conjunction with a special code programme, allows group calling with units of 10, 100 and 1000 receivers.

The programming of codes is done by soldering programme pins in the matrix plug-in module (direct decimal coding). Up to 100'000 codes can be programmed in this manner. Coding may be varied for receive and transmit functions. The Colibri 3 has a special facility included for automatic transponding of a reply code when the correct address is given and there is also a special code to activate a repeater base station.

Careful attention has been given to operation under high noise level conditions and specially developed digital filtering techniques are employed which permit operation under adverse signal to noise ratios. The filter circuits have a constant bandwidth over a wide dynamic range.

Colibri 3 is suitable for fixed station, mobile and portable systems.

Connection		Designation
P101	Pin 1	0 V, ground
	Pin 2	AF output block Block cancelled = 0 V
	Pin 3	Alert lamp output, blinks at 0,5 sec. intervals, 13,2 V DC max. 100 mA
	Pin 4	Input for alarm re-set. Normal = 13,2 V DC Re-set = 13,2 V interrupted.
	Pin 5	Input for group call - used only with extra unit
	Pin 6	Input tone sequence from radio receiver min. 30 mV RMS
	Pin 7	+13,2 V DC - power source
	Pin 8	Radio transmitter start - output 0 V
	Pin 9	Selective call start - input 0 V
	Pin 10	Output tone sequence to transceiver modulator approx. 50 mV RMS
	Pin G	Group alert output Activated = 13,2 V impulse approx. 100 ms

19771025 MU/ei

6. Five Tone Selective Call System with Colibri

As already mentioned in paragraphs 4.5 and 5.5, Colibri 3 can be used along with other selective call accessories.

6.1 External Code Selector Unit SMP

The Colibri is a very small decode/encode unit and is mostly used by itself in portable transceivers, although it also can easily be used in mobile and base station transceivers. If external coding - i.e. several different call codes - is required, then Colibri combined with an SMP can be employed. The Colibri only needs to be plugged into the already built-in code selector unit - SMP. The first three tones should be programmed on the Matrix while the last two tones, with the help of the SMP switches can be freely chosen. This combination gives the choice of 100 different calls.

6.2 Group Call Unit

The operation of the group call unit has already been discussed in paragraph 4.6. It remains only to mention that the additional group call printed circuit board is very small and can be installed in most mobile and base stations without any trouble. The installation in portable transceivers, however, is more difficult due to the lack of space.

Colibri 3 can now be put into the transmit mode for checking, and if necessary, adjustment of the frequency using the following procedure.

8. Make a momentary short circuit between pin 9 and pin 1 (ground) on P101.
9. Check the frequency at pin 10 of P101 with a frequency counter.
10. If necessary adjust the frequency with potentiometer R24 to 1530 Hz (1540 Hz*).

    *) Numbers in brackets refer to the CCIR norm, others apply to the ZVEI norm.

As the basic adjustment (item 10) governs all the tones (encode and decode) no further calibration is necessary. When the Colibri 3 is functioning normally no further adjustments are required.

5.4 Checking Operation

Although the Colibri is given a final test and adjustment in the factory, a simple and safe method of checking the operation is the practical test with a transceiver, where all the different functions can be tested.
If, however, for any reason a practical test is not possible or if a known fault has been localised, it is recommended that a suitable test set be used.

5.5 Marking the Colibri Contacts

Colibri 3 is connected via a plug - P101 - to the radio transceiver. With a Selective Master Print wired in, the connections with P101 and P102 follow via the SMP to the transceiver. (See chapter six).

5. COLIBRI 3 ADJUSTMENT

5.1 General

It is basically possible to adjust the Colibri 3 while it is in position and with the matrix module in place. For the sake of simplicity, only one method of adjustment is described here.

5.2 Connection Diagram

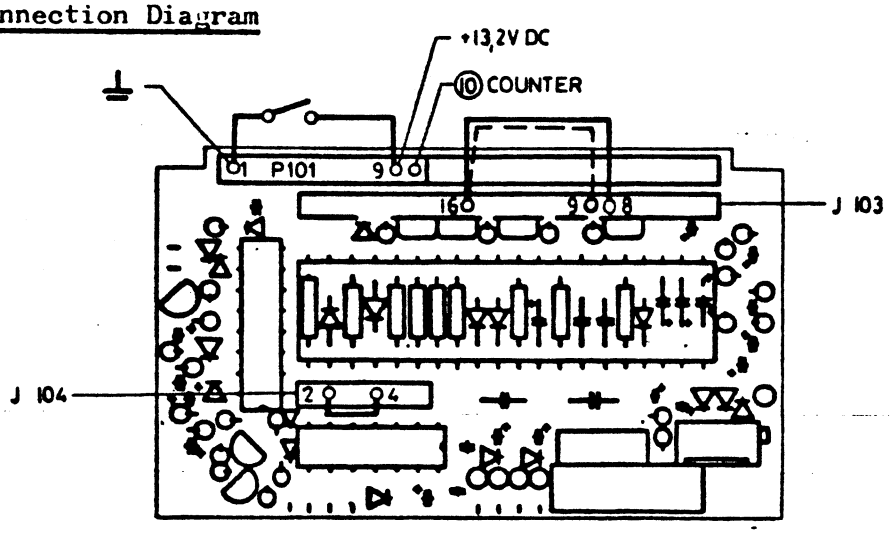

5.3 Basic Tuning of Tone Frequencies

The following connections should be made on the Colibri 3 printed circuit board:

1. Main IC 1 check: ZVEI = FX 507 A
   CCIR = FX 407 A
2. Check precision resistors R25 and R28:
   ZVEI = R25 130 k ohm and R28 205 k ohm
   CCIR = R25 196 k ohm and R28 301 k ohm
3. 0 V, ground to P101 - pin 1.
4. 13,2 V DC to P101 - pin 7.
5. Frequency counter to P101 - pin 10.
6. Connect pin 16 to pin 8 (pin 9*) at J103.
7. Connect pin 2 to pin 4 at J104.

4.6 Group Calling

The decoding of group calls is made possible with the help of an extra Group Call Receiver Unit. With this facility it is possible to decode and indicate group calls in mobile transceivers and base stations. Group call indication via Pin G (Special alarm output.)

Function

The in-coming five tone sequence is sent to the Group Call Receiver Unit and the decoder at the same time. If the Group Call unit reads a "G" tone an impulse will be generated and sent to Colibri 3 via pin 5. At this moment the decode is automatically changed to a Group code if the tone before "G" agrees with the normal decode programme. At the end of the decode sequence the AF blocking signal on pin 2 will activate (independent of programme "F") approximately five seconds and a Group alert will be given on pin "G". In this case an automatic reply is not possible.

Example of Group Calls

Receiver Code	Receiver decode with code nr.	Total activated units	Alert
25 7 84	25 7 84	1	Single
25 7 8G	25 7 80 to 25 7 89	10	Group
25 7 GR	25 7 00 to 25 7 99	100	Group
25 G RG	25 0 00 to 25 9 99	1000	Group

Example 2: With reply code and relay start.

Encode:	22244	=	S1	S2	S3	S4T	S5T
Decode:	22255	=	S1	S2	S3	S4R	S5R
Reply code:	22244	=	S1	S2	S3	S4T	S5T
B-Code:	22222	=	Relay start			S4B	S5B

NOTE: So that the reply code and encode are the same and the relay start is triggered, links C and Q must be closed.

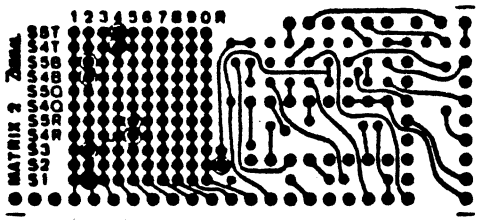

Example 3: With reply (Q-code) and prolonged first tone.

Encode:	73548	=	S1	S2	S3	S4T	S5T
Decode:	73594	=	S1	S2	S3	S4R	S5R
Reply code:	73562	=	S1	S2	S3	S4Q	S5Q

NOTE: So that the reply code and prolonged first tone are activated, the links Q, D and E must be closed.

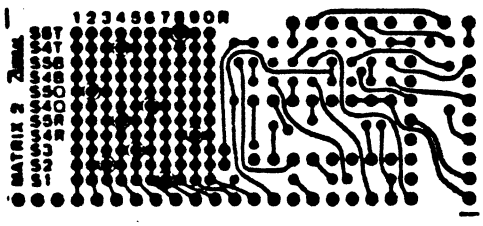

4.5 External Code Selection via Switch

It is possible to programme S4T and S5T via connector P102 pins 1 & 2. In this case the programme pins on the matrix array should not be soldered. (See chapter six.)

ODIAC®
Messgeräte AG
0830 PE/ei

Stückliste: Component list: Z 4060-100 | Gerät: Set: COLIBRI 3 | Dat.: 30.8.1977 Sign.: P. Emmenegger | Seite: Page: 1 /4

nstand onent	Position	Anz. Nr.	Wert Value	Typ/Zeichnung Type/Drawing	Bestell Nr. Order Nr.	Hersteller Manufacturer	Lieferant Supplier	Lager Nr. Stock Nr.	Bemerkung Remarks
tand/ stor	R 1	1	10 E	CR 25 A	2322-106-33109	Philips	Elcoma	831-09-10	
	R 2	1	2 k 2	CR 25 A	-33222	"	"	832-22-10	
	R 3	1	330 k	CR 25	2322-101-33334	"	"	833-34-11	
	R 4	1	330 k	CR 25	-33334	"	"	833-34-11	
	R 5	1	100 k	CR 25	-33104	"	"	831-04-11	
	R 6	1	2 k 2	CR 25 A	2322-106-33222	"	"	832-22-10	
	R 7	1	2 k 2	CR 25 A	-33222	"	"	832-22-10	
	R 8	1	680 E	CR 25 A	-33681	"	"	836-81-10	
	R 9	1	22 k	CR 25 A	-33223	"	"	832-23-10	
	R 10	1	22 k	CR 25 A	-33223	"	"	832-23-10	
	R 11	1	22 k	CR 25 A	-33223	"	"	832-23-10	
	R 12	1	4 k 7			Riverohm		814-72-01	
	R 13	1	2 M 2	CR 25	2322-101-33225	Philips	Elcoma	832-25-11	
	R 14	1	100 k	CR 25	-33104	"	"	831-04-11	
	R 15	1	100 k	CR 25 A	2322-106-33104	"	"	831-04-10	
	R 16	1	100 k	CR 25 A	-33104	"	"	831-04-10	
	R 17	1	10 k	CR 25 A	-33103	"	"	831-03-10	
	R 18	1	470 k	CR 25 A	-33474	"	"	834-74-10	
	R 19	1	220 k	CR 25 A	-33224	"	"	832-24-10	
	R 20	1	4 k 7			Riverohm		814-72-01	
	R 21	1	47 k	CR 25 A	2322-106-33473	Philips	Elcoma	834-73-10	
	R 22	1	2 M 2	CR 25	2322-101-33225	"	"	832-25-11	
	R 23	1	105 k	MR 25 1%	2322-151-51054	"	"	891-04-05	
	R 24	1	25 k	64Z 253		Spectrol	Aumann & Co	872-53-20	
	R 25 A	1	196 k	MR 25 1%	2322-151-51964	Philips	Elcoma	891-94-06	CCIR
	R 25 B	1	130 k	MR 25 1%	-51304	"	"	891-34-00	ZVEI
	R 26	1	1 M 2	CR 25	2322-101-33125	"	"	831-25-11	
	R 27	1	390 k	CR 25	-33394	"	"	833-94-11	
	R 28 A	1	301 k	MR 25 1%	2322-151-53014	"	"	893-04-01	CCIR
	R 28 B	1	205 k	MR 25 1%	-52054	"	"	892-04-05	ZVEI
	R 29	1	1 M 8	CR 25	2322-101-32185	"	"	831-85-11	
	R 30	1	1 M 0			Riverohm		811-05-01	
	R 31	1	1 M 0			"		811-05-01	
	R 32	1	1 M 0			"		811-05-01	

ZODIAC®
Funksprechgeräte AG
770831 PE/ei

Stückliste: Component list: Z4060-100	Gerät: Set: COLIBRI 3	Dat.: 30.8.1977 Sign.: P. Emmenegger	Seite: Page: 2 /4

Gegenstand Component	Position	Anz. Nr.	Wert Value	Typ/Zeichnung Type/Drawing	Bestell Nr. Order Nr.	Hersteller Manufacturer	Lieferant Supplier	Lager Nr. Stock Nr.	Bemerkung Remarks
Widerstand/ Resistor	R 33	1	1 M 0			Riverohm		811-05-01	
	R 34	1	100 k	CR 25 ▲	2322-106-33104	Philips	Elcoma	831-04-10	
	R 35	1	22 k	CR 25 ▲	-33223	"	"	832-23-10	
	R 36	1	100 k	CR 25 ▲	-33104	"	"	831-04-10	
	R 37	1	2 k 2	CR 25 ▲	-33222	"	"	832-22-10	
Transistoren/ Transistors	T 1	1		BC 547	9331-976-30112	Philips	Elcoma	951-11	
	T 2	1		BC 328	-491-90112	"	"	953-05	
	T 3	1		BC 547	-976-30112	"	"	951-11	
	T 4	1		ZTX 3702 L			Elbatex	953-91	
	T 5	1		ZTX 3702 L			"	953-91	
	T 6	1		ZTX 3702 L			"	953-91	
	T 7	1		ZTX 3702 L			"	953-91	
Dioden/Diodes	D 1	1		1 N 4148	9330-839-90112	Philips	Elcoma	501-41	
	D 2	1		1 N 4148	-90112	"	"	501-41	
	D 3	1		1 N 4148	-90112	"	"	501-41	
	D 4	1		1 N 4148	-90112	"	"	501-41	
	D 5	1		1 N 4148	-90112	"	"	501-41	
	D 6	1		1 N 4148	-90112	"	"	501-41	
	D 7	1		1 N 4148	-90112	"	"	501-41	
	D 8	1		1 N 4148	-90112	"	"	501-41	
	D 9	1		1 N 4148	-90112	"	"	501-41	
	D 10	1		1 N 4148	-90112	"	"	501-41	
	D 11	1		1 N 4148	-90112	"	"	501-41	
	D 12	1		1 N 4148	-90112	"	"	501-41	
	D 13	1		1 N 4148	-90112	"	"	501-41	
	D 14	1		1 N 4148	-90112	"	"	501-41	
	D 15	1		1 N 4148	-90112	"	"	501-41	
	D 16	1		1 N 4148	-90112	"	"	501-41	
	D 17	1		1 N 4148	-90112	"	"	501-41	
	D 18	1		1 N 4148	-90112	"	"	501-41	
	D 19	1		1 N 4148	-90112	"	"	501-41	

ZODIAC®
nksprechgeräte AG
70830 PE/ei

Stückliste: Component list: Z 4060-100 | Gerät: Set: COLIBRI 3 | Dat.: 30.8.1977 Sign.: P. Emmenegger | Seite: Page: 3 /4

enstand PONENT	Position	Anz. Nr.	Wert Value	Typ/Zeichnung Type/Drawing	Bestell Nr. Order Nr.	Hersteller Manufacturer	Lieferant Supplier	Lager Nr. Stock Nr.	Bemerkun Remarks
densator/ ondensers	C 1	1	22 u	16 V		Bosch	Fabrimex AG	742-26-13	
	C 2	1	2 n 2	630		Philips	Elcoma	712-22-11	
	C 3	1	1 u 0	25 V		Bosch	Fabrimex AG	741-05-15	
	C 4	1	10 n	ECS Z35 MA103			Elbatex AG	741-03-16	
		1*	10 n	20 V	ETX 1 axial		Roederstein	741-03-14	*Ersatz
	C 5	1	0 u 47	35 V			Fabrimex AG	744-74-16	
	C 6	1	1 u 0	16 V	ETU 3		Roederstein	741-05-13	
	C 7	1	1 u 0	25 V		Bosch	Fabrimex AG	741-05-15	
	C 8	1	1 u 0	25 V		Bosch	Fabrimex AG	741-05-15	
	C 9	1	1 n 0	630		Philips	Elcoma	711-02-11	
	C 10	1	100 p	632		Philips	Elcoma	711-01-11	
	C 11	1	0 u 1	ECS Z35 MAR 1			Elbatex AG	741-04-16	
		1*	0 u 1	20 V	ETX 1 axial		Roederstein	741-04-14	*Ersatz
	C 12	1	1 u 0	25 V		Bosch	Fabrimex AG	741-05-15	
	C 13	1	1 u 0	16 V	ETU 3		Roederstein	741-05-13	
	C 14	1	0 u 1	ECS Z35 MAR 1			Elbatex AG	741-04-16	
		1*	0 u 1	20 V	ETX 1 axial		Roederstein	741-04-14	*Ersatz
	C 15	1	10 n	KC 1848			"	771-03-37	
	C 16	1	1 u 0	MKC 1862			"	771-05-35	
	C 17	1	1 u 0	25 V	ETQ 1		Roederstein	741-05-25	
	C 18	1	1 u 0	25 V	ETQ 1		"	741-05-25	
	C 19	1	100 p	632		Philips	Elcoma	711-01-11	
	C 20	1	22 n	20 V	ETU 1		Roederstein	742-23-24	
	C 21	1	1 u 0	25 V		Bosch	Fabrimex AG	741-05-15	
	C 22	1	0 u 1	ECS Z35 MAR 1			Elbatex AG	741-04-16	
		1*	0 u 1	20 V	ETX 1 axial		Roederstein	741-04-14	*Ersatz
	C 23	1	0 u 1	B 32560			Siemens	771-04-21	
	C 24	1	0 u 1	B 32560			Siemens	771-04-21	
	C 25	1	470 p	B 31310			Siemens	774-71-01	
	C 26	1	470 p	B 31310			Siemens	774-71-01	
	C 27	1	22 u	16 V		Bosch	Fabrimex AG	742-26-13	

ZODIAC®
nksprechgeräte AG
770830 PE/ei

Stückliste: Component list: Z 4060-100 | Gerät: Set: COLIBRI 3 | Dat.: Sign.: 30.8.1977 P. Emmenegger | Seite: Page: 4 /4

Gegenstand Component	Position	Anz Nr.	Wert Value	Typ/Zeichnung Type/Drawing	Bestell Nr. Order Nr.	Hersteller Manufacturer	Lieferant Supplier	Lager Nr. Stock Nr.	Bemerkung Remarks
I IC	IC 1A	1		FX 407 A			Egli Fischer	988-01	CCIR
	IC 1B	1		FX 507 A			Egli Fischer	988-02	ZVEI
	IC 2	1		MC 14011 CP			Omni Ray	991-11	
	IC 3	1		MC 14572 CP			Omni Ray	991-72	
tstifte/ lder lugs	LF 1-10	10		BZ 1001 verz.			Vogt AG	179-11	
int/ P.c.b.		1		Z 4050-802					
ecker/PCB	P 101	1		10 pol. MMP			Kurt Hirt	053-11	
plug	P 102	1		14 pol. MMP			Kurt Hirt	053-14	
Sockel/PCB	J 103	1		20 pol. SAE			Egli Fischer	052-20	
connector	J 104	1		6 pol. SAE			Egli Fischer	052-06	
hse/Socket	J 105	1		40 pol.	960-40-CC-C		Kurt Hirt	160-40	
	J 106	1		1 pol.			"	160-04	
	J 107	1		1 pol.			"	160-04	
	J 108	1		1 pol.			"	160-04	
	J 109	1		1 pol.			"	160-04	
	J 110	1		1 pol.			"	160-04	

ZODIAC®
Funksprechgeräte AG
19770829 PE/ei

	Stückliste: Component list: Z 4060-101				Gerät: Set: MATRIX 2		Dat.: 29.8.1977 Sign.: P. Emmenegger		Seite: Page: 1/1	
Gegenstand Component	Position	Anz. Nr.	Wert Value	Typ/Zeichnung Type/Drawing	Bestell Nr. Order Nr.	Hersteller Manufacturer	Lieferant Supplier	Lager Nr. Stock Nr.	Bemerkungen Remarks
derstand	R 1	1	220 k			River Ohm		812-24-01	
Resistor	R 2	1	220 k			"		812-24-01	
	R 3	1	220 k			"		812-24-01	
	R 4	1	220 k			"		812-24-01	
	R 5	1	220 k			"		812-24-01	
	R 6	1	220 k			"		812-24-01	
	R 7	1	220 k			"		812-24-01	
	R 8	1	220 k			"		812-24-01	
oden/Diodes	D 1	1	1 N 4148		9330-839-90112	Philips	Elcoma	501-41	
	D 2	1	1 N 4148		9330-839-90112	"	"	501-41	
	D 3	1	1 N 4148		9330-839-90112	"	"	501-41	
	D 4	1	1 N 4148		9330-839-90112	"	"	501-41	
	D 5	1	1 N 4148		9330-839-90112	"	"	501-41	
	D 6	1	1 N 4148		9330-839-90112	"	"	501-41	
	D 7	1	1 N 4148		9330-839-90112	"	"	501-41	
	D 8	1	1 N 4148		9330-839-90112	"	"	501-41	
	D 9	1	1 N 4148		9330-839-90112	"	"	501-41	
	D 10	1	1 N 4148		9330-839-90112	"	"	501-41	
gital ICs	IC 1	1		HEF 4052 P	9332-824-30112	"	"	995-52	
	IC 2	1		MC 14572 CP		Motorola	Omni Ray	991-72	
tecker/ PCB Connector	P 203	1		20 pol. ODU	V 71 120		Egli-Fischer	172-20	
	P 204	1		6 pol. ODU	V 71 106		Egli-Fischer	172-06	
int /PCB		1		Z 4060-812					
tstift/solder lugs	LFI-3	3			BZ SN-8		Vogt AG	179-11	

2. TECHNICAL DATA — COLIBRI 3 and Programme Matrix

Dimensions:	75 x 44 x 15 mm
Weight:	≈40 grammes
Temperature range:	-30 to +60 degrees Centigrade
Voltage range:	10,8 to 15,6 V - nominal 13,2 V DC
Current consumption:	≈18 mA
Tone stability:	+/- 1%
Period stability:	+/- 10%
Sensitivity:	min. 30 mV RMS
Input impedance:	100 k ohm
Output voltage:	≈50 mV RMS at 1500 Hz, -6 dB/octave
Output impedance:	2200 ohms

Timing:			
	Tone Period:	CCIR = 100 ms +10%	ZVEI = 70 ms +15ms
	Gate Period:	CCIR ≈ 170 ms	ZVEI ≈ 120 ms
	Transmit delay time:	CCIR ≈ 240 ms	ZVEI ≈ 240 ms

Tone Frequencies (in Hz)		CCIR	ZVEI
Tone	1	1124	1060
	2	1197	1160
	3	1275	1270
	4	1358	1400
	5	1446	1530
	6	1540	1670
	7	1640	1830
	8	1747	2000
	9	1860	2200
	0	1981	2400
	R	2110	2600
	G	2400	2800

3. MODE OF OPERATION

Operation mode is achieved with the help of solder lugs, two of which together build a programme link. Four of these programme links are to be found on the component side of the Colibri printed circuit board, (at the outside edge opposite the module connector) and are marked "C", "Q", "D" and "E". A fifth programme link, marked "F" is to be found on the component side of the Colibri printed circuit board beside the module connector. The codes are programmed by soldering in a wire across the respective solder lugs.

3.1 Programming the Operation Mode

Function	Programme	Significance
Relay start	C open	Normal operational mode.
	C closed	2 pulse groups are transmitted. The first is the relay activation code S1, S2, S3, S4B, S5B and the second is the normal transmission code S1, S2, S3, S4T, S5T.
Reply code (See also ch. 3.2.)	Q open	No reply
	Q closed	After decoding a reply code is automatically sent. (See ch. 3.2.)
Scanning	D & E open	Normal operational mode
	D closed	The first encoder tone is lengthened to 700 ms to outlast the scanning cycle time.
	E closed	The re-set time for start is prolonged to approx. 1200 ms after receipt of the first tone.
AF amplifier Blocking	F open	Blocking opens for 5 secs. when alert is given.
	F closed*	Block is cancelled when the alarm is re-set.

* When a group call facility is employed "F" can only be programmed with the help of a diode. This diode must be soldered with the cathode facing T3.

4. CODING

4.1 General

As already mentioned in chaper one, the Colibri 3 is able to generate twelve different tone frequencies. The frequencies 0 to 9 (see chapter two "Tone frequencies") are used to code the five sequential tones. The "R" frequency marks a repeat tone and the "G" frequency is for use in group calling.

The coding is done on the soldering matrix of the Matrix printed circuit board. The soldering matrix is divided into sequential tone rows and tone frequency columns, and it makes an area of 11 x 11 solder points on the rear and front sides of the matrix array. Programming is done by soldering a wire - max. 0,7 mm thick - from the front through to the rear of one of the solder points.

The sequential tones are numbered S1, S2 etc, the reason for this method of numbering can be seen from the table below. The tone frequency column is numbered 1, 2, 3 ... to 0 and R. These designations correspond to the frequencies given in chapter two.

4.2 Tone Sequence Numbering

S1	first	sequence	tone in	transmit/receive code
S2	second	"	"	" "
S3	third	"	"	" "
S4R	fourth	"	"	receive code
S5R	fifth	"	"	" "
S4Q	fourth	"	"	reply code
S5Q	fifth	"	"	" "
S4B	fourth	"	"	repeater start code
S5B	fifth	"	"	" " "
S4T	fourth	"	"	normal transmit code
S5T	fifth	"	"	" " "

4.3 "R" Tone

In programming the first three tone digits, it must be noted that two identical tones cannot follow each other. In this case the "R" tone must be connected instead of a second identical tone.

Automatic "R" Tone

It should be noted that for the fourth and fifth tone in a code group the "R" cannot be used. The Colibri circuitry ensures that the "R" tone follows automatically in the right place.

For example:

Call number:	6 6 4 7 7	3 6 6 6 2	6 6 6 6 6
Programmed:	6 R 4 7 7	3 6 R 6 2	6 R 6 6 6
Transmitted:	6 R 4 7 R	3 6 R 6 2	6 R 6 R 6

4.4 Examples of Coding

Example 1: Normal operation mode without reply code, relay start or prolonged first tone.

Encode:	87712	=	S1	S2	S3	S4T	S5T
Decode:	87790	=	S1	S2	S3	S4R	S5R

NOTE: For S3 the "R" tone should be programmed.

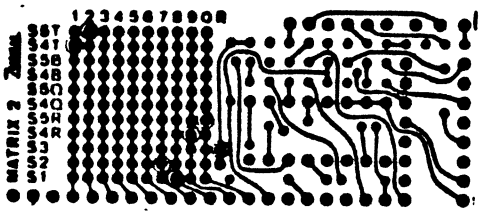

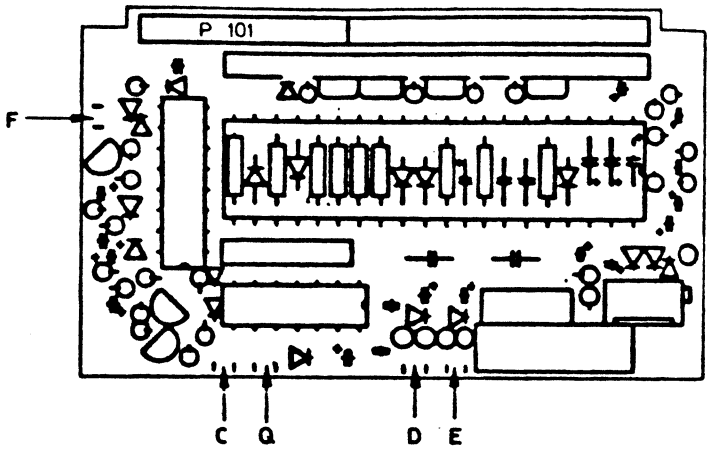

3.2 Programming the Reply Code

If an automatic reply is programmed, it is possible by further programming, to choose between an additional four different reply codes (encode-, decode-, relay- and Q codes).

This is done with the help of three solder lugs which together build two programme links. These links are to be found on the matrix module below the six pin contact and are marked "A" and "B". Wires are soldered onto the lugs to make the desired programme.

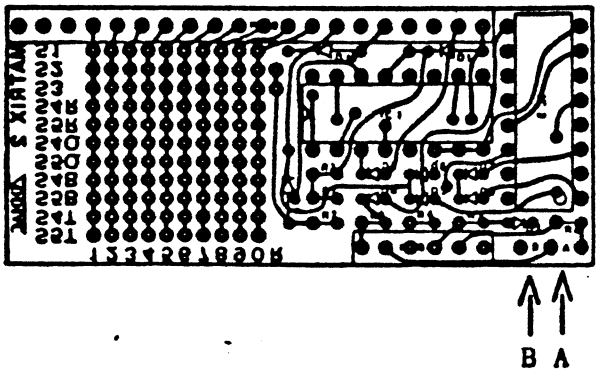

Code	Programme Link	Transmitted Reply Code				
Encode	o B o A o	S1	S2	S3	S4T	S5T
Decode	o B A o	S1	S2	S3	S4R	S5R
Relay Code	o B A	S1	S2	S3	S4B	S5B
Q code	B A	S1	S2	S3	S4Q	S5Q

NOTE: In most cases it is sufficient to encode the rows S1 to S3 and S4T, S5T, S4R and S5R. If, however, an operation mode is programmed with relay start or reply including relay or Q codes, the rows S4R, S5R, S4Q and S5Q should also be encoded. (See also chapter four - Coding)